Product data sheet

IME12-08NP0ZC0S

IME

INDUCTIVE PROXIMITY SENSORS

SICK
Sensor Intelligence.

Illustration may differ

Ordering information

Type	Part no.
IME12-08NP0ZC0S	1040784

Included in delivery: BEF-MU-M12 (1)

Other models and accessories → www.sick.com/IME

Detailed technical data

Features

Housing	Cylindrical thread design
Housing	Standard design
Thread size	M12 x 1
Diameter	Ø 12 mm
Sensing range S_n	8 mm
Safe sensing range S_a	6.48 mm
Installation type	Non-flush
Switching frequency	2,000 Hz
Connection type	Male connector M12, 4-pin
Switching output	PNP
Output function	NC
Electrical wiring	DC 3-wire
Enclosure rating	IP67 [1]
Items supplied	Mounting nut, brass, nickel-plated (2x)

[1] According to EN 60529.

Mechanics/electronics

Supply voltage	10 V DC ... 30 V DC
Ripple	≤ 10 %
Voltage drop	≤ 2 V [1]
Time delay before availability	≤ 100 ms

[1] At I_a max.

[2] Supply voltage U_B and constant ambient temperature Ta.

[3] Of Sr.

Hysteresis	5 % ... 15 %
Reproducibility	≤ 2 % [2) 3)]
Temperature drift (of S_r)	± 10 %
EMC	According to EN 60947-5-2
Continuous current I_a	≤ 200 mA
No load current	≤ 10 mA
Short-circuit protection	✓
Reverse polarity protection	✓
Power-up pulse protection	✓
Shock and vibration resistance	30 g, 11 ms/10 Hz ... 55 Hz, 1 mm
Ambient operating temperature	–25 °C ... +75 °C
Housing material	Brass, nickel-plated
Sensing face material	Plastic, PA 66
Housing length	65 mm
Thread length	43 mm
Tightening torque, max.	≤ 12 Nm
UL File No.	NRKH.E181493

[1)] At I_a max.
[2)] Supply voltage U_B and constant ambient temperature Ta.
[3)] Of Sr.

Safety-related parameters

$MTTF_D$	1,735 years
DC_{avg}	0 %

Reduction factors

Note	The values are reference values which may vary
St37 steel (Fe)	1
Stainless steel (V2A, 304)	Approx. 0.8
Aluminum (Al)	Approx. 0.45
Copper (Cu)	Approx. 0.4
Brass (Br)	Approx. 0.4

Installation note

Remark	Associated graphic see "Installation"
A	12 mm
B	24 mm
C	12 mm
D	24 mm
E	16 mm
F	64 mm

Classifications

ECLASS 5.0	27270101

ECLASS 5.1.4	27270101
ECLASS 6.0	27270101
ECLASS 6.2	27270101
ECLASS 7.0	27270101
ECLASS 8.0	27270101
ECLASS 8.1	27270101
ECLASS 9.0	27270101
ECLASS 10.0	27270101
ECLASS 11.0	27270101
ECLASS 12.0	27274001
ETIM 5.0	EC002714
ETIM 6.0	EC002714
ETIM 7.0	EC002714
ETIM 8.0	EC002714
UNSPSC 16.0901	39122230

Installation note

Non-flush installation

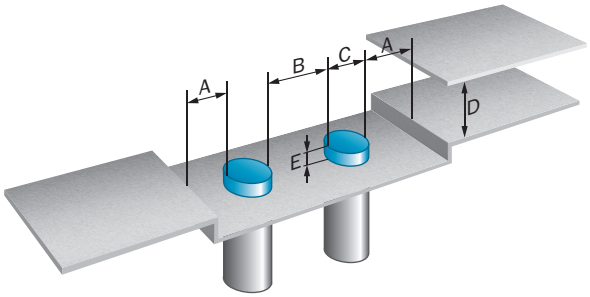

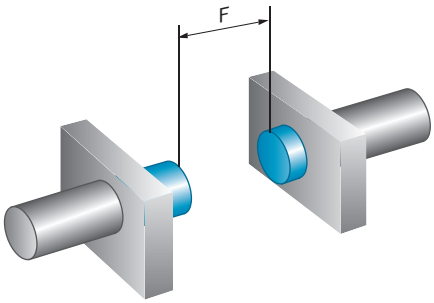

Connection type

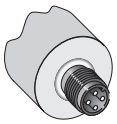

Connection diagram

Cd-008

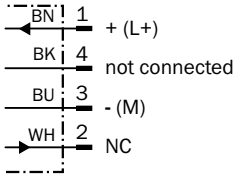

Dimensional drawing (Dimensions in mm (inch))

IME12 Standard, connector, non-flush

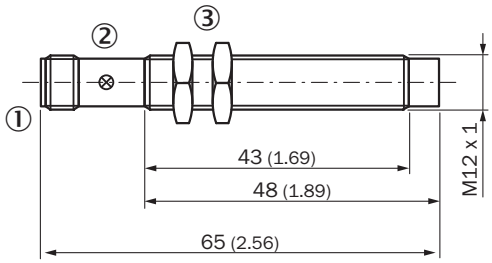

① Connection
② Display LED
③ Fastening nuts (2x); width across 17, metal

Recommended accessories

Other models and accessories ➜ www.sick.com/IME

	Brief description	Type	Part no.
Mounting brackets and plates			
	Mounting plate for M12 sensors, steel, zinc coated, without mounting hardware	BEF-WG-M12	5321869
	Mounting bracket for M12 sensors, steel, zinc coated, without mounting hardware	BEF-WN-M12	5308447
Plug connectors and cables			
	• **Connection type head A:** Female connector, M12, 4-pin, straight • **Description:** Unshielded, Head A: female connector, M12, 4-pin, straight, unshielded, for power supply, for cable diameter 4 mm ... 6 mm Head B: - • **Connection systems:** Screw-type terminals • **Permitted cross-section:** ≤ 0.75 mm²	DOS-1204-G	6007302
	• **Connection type head A:** Female connector, M12, 4-pin, angled • **Description:** Unshielded, Head A: female connector, M12, 4-pin, angled, unshielded, for power supply, for cable diameter 3 mm ... 6.5 mm Head B: - • **Connection systems:** Screw-type terminals • **Permitted cross-section:** ≤ 0.75 mm²	DOS-1204-W	6007303

	Brief description	Type	Part no.
Terminal and alignment brackets			
	Clamping block for round sensors M12, without fixed stop, plastic (PA12), glass-fiber reinforced, mounting hardware included	BEF-KH-M12	2051479
	Clamping block for round sensors M12, with fixed stop, plastic (PA12), glass-fiber reinforced, mounting hardware included	BEF-KHF-M12	2051480
Others			
	• **Connection type head A:** Female connector, M12, 4-pin, straight, A-coded • **Connection type head B:** Flying leads • **Signal type:** Sensor/actuator cable • **Cable:** 2 m, 4-wire, PVC • **Description:** Sensor/actuator cable, unshielded • **Application:** Zones with chemicals	YF2A14-020VB3XLEAX	2096234
	• **Connection type head A:** Female connector, M12, 4-pin, straight, A-coded • **Connection type head B:** Flying leads • **Signal type:** Sensor/actuator cable • **Cable:** 5 m, 4-wire, PVC • **Description:** Sensor/actuator cable, unshielded • **Application:** Zones with chemicals	YF2A14-050VB3XLEAX	2096235
	• **Connection type head A:** Female connector, M12, 4-pin, straight, A-coded • **Connection type head B:** Flying leads • **Signal type:** Sensor/actuator cable • **Cable:** 10 m, 4-wire, PVC • **Description:** Sensor/actuator cable, unshielded • **Application:** Zones with chemicals	YF2A14-100VB3XLEAX	2096236
	• **Connection type head A:** Female connector, M12, 4-pin, angled, A-coded • **Connection type head B:** Flying leads • **Signal type:** Sensor/actuator cable • **Cable:** 2 m, 4-wire, PVC • **Description:** Sensor/actuator cable, unshielded • **Application:** Zones with chemicals	YG2A14-020VB3XLEAX	2095895
	• **Connection type head A:** Female connector, M12, 4-pin, angled, A-coded • **Connection type head B:** Flying leads • **Signal type:** Sensor/actuator cable • **Cable:** 5 m, 4-wire, PVC • **Description:** Sensor/actuator cable, unshielded • **Application:** Zones with chemicals	YG2A14-050VB3XLEAX	2095897
	• **Connection type head A:** Female connector, M12, 4-pin, angled, A-coded • **Connection type head B:** Flying leads • **Signal type:** Sensor/actuator cable • **Cable:** 10 m, 4-wire, PVC • **Description:** Sensor/actuator cable, unshielded • **Application:** Zones with chemicals	YG2A14-100VB3XLEAX	2095898

SICK AT A GLANCE

SICK is one of the leading manufacturers of intelligent sensors and sensor solutions for industrial applications. A unique range of products and services creates the perfect basis for controlling processes securely and efficiently, protecting individuals from accidents and preventing damage to the environment.

We have extensive experience in a wide range of industries and understand their processes and requirements. With intelligent sensors, we can deliver exactly what our customers need. In application centers in Europe, Asia and North America, system solutions are tested and optimized in accordance with customer specifications. All this makes us a reliable supplier and development partner.

Comprehensive services complete our offering: SICK LifeTime Services provide support throughout the machine life cycle and ensure safety and productivity.

For us, that is "Sensor Intelligence."

WORLDWIDE PRESENCE:

Contacts and other locations –www.sick.com

SICK
Sensor Intelligence.