Product data sheet

UNIV DETEC4 KIT 300 MM, 30 MM W/O LED

deTec

SAFETY LIGHT CURTAINS

SICK
Sensor Intelligence.

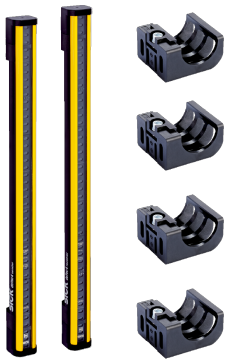

Illustration may differ

Ordering information

Note	Resolution	Scanning range	Protective field height	System part	Type	Part no.
Scope of delivery of sender and receiver without system plug. The system plugs must be ordered separately. For details, see “Accessories”.	30 mm	30 m	300 mm	Set	UNIV DETEC4 KIT 300 MM, 30 MM W/O LED	1116098

Included in delivery: C4P-EA03031C00 (1), C4P-SA03031A00 (1), BEF-1SHABPKU4 (1)

Scope of delivery of sender and receiver without system plug. The system plugs must be ordered separately. For details, see “Accessories”.

Other models and accessories ➜ www.sick.com/deTec

Detailed technical data

Features

Sub product family	deTec4
Application	Normal industrial environment
System part	Set
Resolution	30 mm
Scanning range	30 m
Protective field height	300 mm
Response time	9 ms (Uncoded) 12 ms (code 1 or code 2)
No blind zones	Yes
Synchronization	Optical synchronisation
Integrated laser alignment aid	✓
Items supplied	Sender Receiver FlexFix brackets Test rod with diameter corresponding to the resolution of the safety light curtain Safety instruction Mounting instructions Operating instructions for download

Safety-related parameters

Type	Type 4 (IEC 61496-1)
Safety integrity level	SIL 3 (IEC 61508)
Category	Category 4 (ISO 13849-1)
Performance level	PL e (ISO 13849-1)

PFH_D (mean probability of a dangerous failure per hour)	
Single device	15.3×10^{-9}
Cascade with one guest	30.5×10^{-9}
Cascade with two guest devices	45.6×10^{-9}
T_M (mission time)	20 years (ISO 13849-1)
Safe state in the event of a fault	At least one OSSD is in the OFF state.

Functions

Protective operation	✓
Automatic calibration of the protective field width	✓
Beam coding	✓
Restart interlock	✓
External device monitoring (EDM)	✓
Cascading	✓
Smart presence detection	✓
Reduced resolution	✓
Dynamic protective field width during operation	✓
Differentiation between person and material	
2-signal muting	✓

Interfaces

System connection	Depending on system plug (M12 male connector, 5-pin or 8-pin)
Extension connection	Depending on system plug (without extension connection or with M12 female connector, 5-pin)
Configuration method	DIP switch on system plug
Display elements	LEDs
Display of the synchronization status of the upper and lower beams	✓
Application diagnostic output (ADO)	✓
IO-Link	✓
Near Field Communication (NFC)	✓

Electrical data

Protection class	III (IEC 61140)
Supply voltage V_S	24 V DC (19.2 V ... 28.8 V)
Ripple	≤ 10 %
Output signal switching devices (OSSDs)	
Type of output	2 PNP semiconductors, short-circuit protected, cross-circuit monitored [1)]
ON state, switching voltage HIGH	24 V DC (V_S – 2.25 V DC ... V_S)
OFF state, switching voltage LOW	≤ 2 V DC
Current-carrying capacity per OSSD	≤ 500 mA

[1)] Applies to the voltage range between –30 V and +30 V.

Application diagnostic output (ADO)	
Type of output	PNP semiconductor, short-circuit protected [1]
Output voltage HIGH (active)	≥ V_S – 3 V
Output voltage LOW (deactivated)	High resistance
Output current HIGH (active)	≤ 100 mA

[1] Applies to the voltage range between –30 V and +30 V.

Mechanical data

Dimensions	See dimensional drawing
Housing material	Aluminum extruded profile

Ambient data

Enclosure rating	IP65 (IEC 60529) IP67 (IEC 60529)
Ambient operating temperature	–30 °C ... +55 °C
Storage temperature	–30 °C ... +70 °C
Air humidity	15 % ... 95 %, Non-condensing
Vibration resistance	5 g, 10 Hz ... 55 Hz (IEC 60068-2-6)
Shock resistance	10 g, 16 ms (IEC 60068-2-27)

Other information

Wave length	850 nm
Type of light	Near-infrared (NIR), invisible
Integrated laser alignment aid	✓
Laser class	1
Wave length	650 nm
Type of light	Visible red light

Classifications

ECLASS 5.0	27272704
ECLASS 5.1.4	27272704
ECLASS 6.0	27272704
ECLASS 6.2	27272704
ECLASS 7.0	27272704
ECLASS 8.0	27272704
ECLASS 8.1	27272704
ECLASS 9.0	27272704
ECLASS 10.0	27272704
ECLASS 11.0	27272704
ECLASS 12.0	27272704
ETIM 5.0	EC002549
ETIM 6.0	EC002549
ETIM 7.0	EC002549
ETIM 8.0	EC002549
UNSPSC 16.0901	46171620

Dimensional drawing (Dimensions in mm (inch))

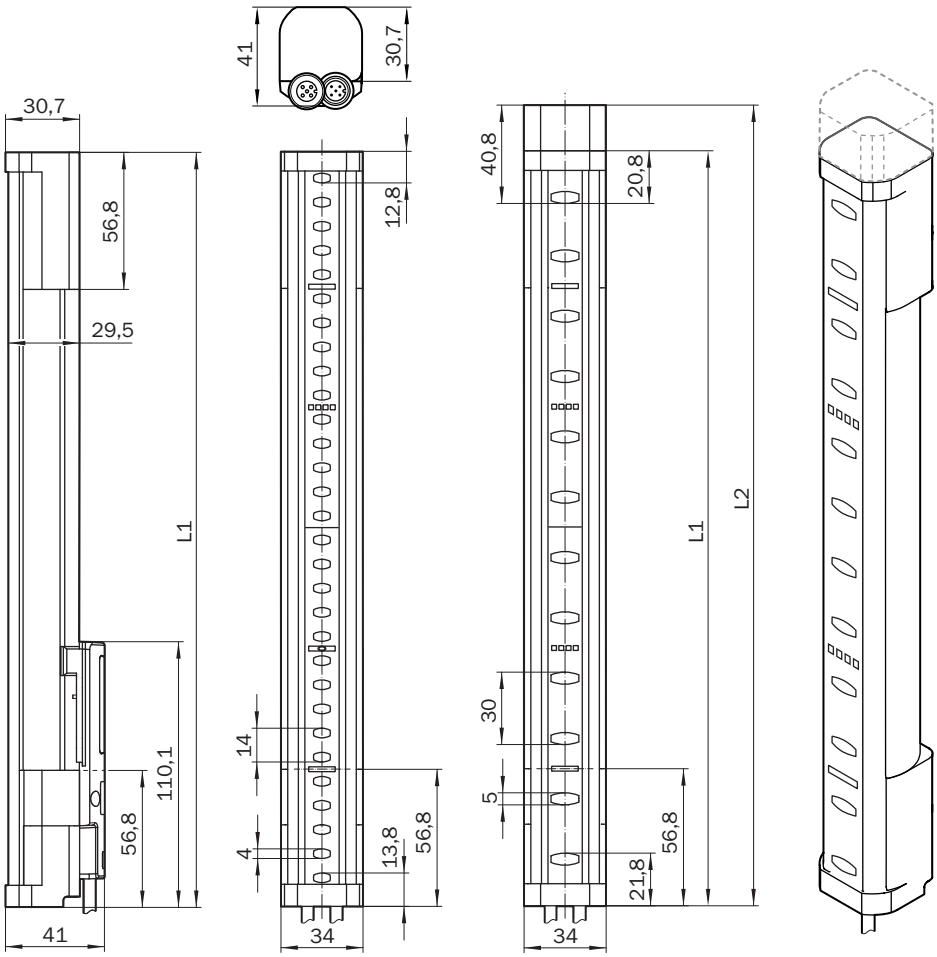

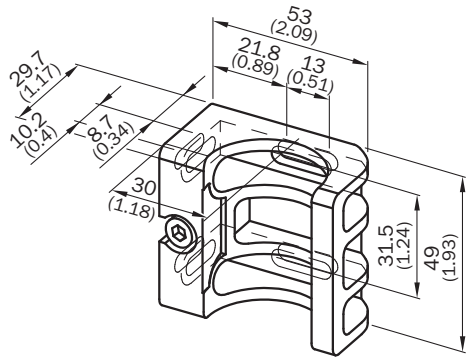

Protective field height	L1	L2
300 (11.81)	313 (12.32)	332 (13.07)
450 (17.72)	463 (18.23)	482 (18.98)
600 (23.62)	613 (24.13)	632 (24.88)
750 (29.53)	763 (30.04)	782 (30.79)
900 (35.43)	913 (35.94)	932 (36.69)
1,050 (41.34)	1,063 (41.85)	1,082 (42.6)
1,200 (47.24)	1,213 (47.75)	1,232 (48.5)

Protective field height	L1	L2
1,350 (53.15)	1,362 (53.62)	1,381 (54.37)
1,500 (59.06)	1,512 (59.53)	1,531 (60.28)
1,650 (64.96)	1,662 (65.43)	1,681 (66.18)
1,800 (70.87)	1,812 (71.34)	1,831 (72.09)
1,950 (76.77)	1,962 (77.24)	1,981 (77.99)
2,100 (82.68)	2,112 (83.15)	2,131 (83.9)

Recommended accessories

Other models and accessories ➜ www.sick.com/deTec

	Brief description	Type	Part no.
Connection modules			
	IO-Link V1.1 Class A port, USB2.0 port, optional external power supply 24V / 1A	IOLA2US-01101 (SiLink2 Master)	1061790
	Connector for connecting an IO-Link master and up to 2 muting sensors to a safety light curtain or a multiple light beam safety device	IO-Link connector	2092757
	Connector for connecting 2 muting sensors and a muting lamp to a safety light curtain or a multiple light beam safety device	Muting connector	2092758
Muting accessories			
	Sensor bracket G6 and P250	BEF-2KHAAAKU1	2113145
	Universal holder for round steel arms and muting arms, for mounting sensors or reflectors	BEF-KHS-N01	2044953
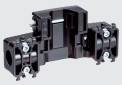	Muting arm bracket	Muting arm bracket	2106455
	Muting arm, long	Muting arm, long	2111923
	Muting arm, short	Muting arm, short	2111924
Distributors			
	• **Connection type head A:** Female connector, M12, 5-pin, A-coded • **Connection type head B:** Male connector, M12, 5-pin, A-coded • **Connection type head C:** Female connector, M12, 5-pin, A-coded • **Description:** T-piece for simultaneous connection to sender and receiver, splits the cable from the control cabinet to the sender and receiver • **Note:** 5-pin	DSC-1205T000025KM0	6030664
	• **Connection type head A:** Female connector, M12, 8-pin, A-coded • **Connection type head B:** Female connector, M12, 8-pin, A-coded • **Connection type head C:** Male connector, M12, 8-pin, A-coded • **Description:** T-distributor for simultaneous connection to sender and receiver, splits the cable from the control cabinet between the sender and receiver • **Note:** 8-pin	DSC-1208T000025KM0	6058647

	Brief description	Type	Part no.
Reflectors			
	Rectangular, screw connection, 51 mm x 61 mm, PMMA/ABS, Screw-on, 2 hole mounting	P250	5304812
Terminal and alignment brackets			
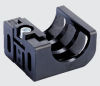	4 pieces, FlexFix bracket for 2 devices (e.g. sender and receiver), can be aligned ± 15°, including M5 screw, plastic	BEF-1SHABPKU4	2066614
	4 pieces, QuickFix bracket for 2 devices (e.g. sender and receiver), plastic	BEF-3SHABPKU4	2098710
	• **Connection type head A:** Female connector, M12, 5-pin, straight, A-coded • **Connection type head B:** Flying leads • **Signal type:** Sensor/actuator cable • **Cable:** 2 m, 5-wire, PUR, halogen-free • **Description:** Sensor/actuator cable, unshielded • **Application:** Zones with oils and lubricants, Drag chain operation, Robot	YF2A15-020UB5XLEAX	2095617
	• **Connection type head A:** Female connector, M12, 5-pin, straight, A-coded • **Connection type head B:** Flying leads • **Signal type:** Sensor/actuator cable • **Cable:** 5 m, 5-wire, PUR, halogen-free • **Description:** Sensor/actuator cable, unshielded • **Application:** Zones with oils and lubricants, Drag chain operation, Robot	YF2A15-050UB5XLEAX	2095618
	• **Connection type head A:** Female connector, M12, 5-pin, straight, A-coded • **Connection type head B:** Flying leads • **Signal type:** Sensor/actuator cable • **Cable:** 10 m, 5-wire, PUR, halogen-free • **Description:** Sensor/actuator cable, unshielded • **Application:** Zones with oils and lubricants, Drag chain operation, Robot	YF2A15-100UB5XLEAX	2095619
	• **Connection type head A:** Female connector, M12, 8-pin, straight, A-coded • **Connection type head B:** Flying leads • **Signal type:** Sensor/actuator cable • **Cable:** 5 m, 8-wire, PUR, halogen-free • **Description:** Sensor/actuator cable, unshielded • **Application:** Zones with oils and lubricants, Drag chain operation, Robot	YF2A18-050UA5XLEAX	2095653
	• **Connection type head A:** Female connector, M12, 8-pin, straight, A-coded • **Connection type head B:** Flying leads • **Signal type:** Sensor/actuator cable • **Cable:** 10 m, 8-wire, PUR, halogen-free • **Description:** Sensor/actuator cable, unshielded • **Application:** Zones with oils and lubricants, Drag chain operation, Robot	YF2A18-100UA5XLEAX	2095654
	• **Connection type head A:** Female connector, M12, 5-pin, straight, A-coded • **Connection type head B:** Male connector, M12, 5-pin, straight, A-coded • **Signal type:** Sensor/actuator cable • **Cable:** 2 m, 5-wire, PUR, halogen-free • **Description:** Sensor/actuator cable, unshielded • **Application:** Zones with oils and lubricants, Drag chain operation, Robot	YF2A15-020UB5M2A15	2096009
	• **Connection type head A:** Female connector, M12, 5-pin, straight, A-coded • **Connection type head B:** Male connector, M12, 5-pin, straight, A-coded • **Signal type:** Sensor/actuator cable • **Cable:** 5 m, 5-wire, PUR, halogen-free • **Description:** Sensor/actuator cable, unshielded • **Application:** Zones with oils and lubricants, Drag chain operation, Robot	YF2A15-050UB5M2A15	2096010

	Brief description	Type	Part no.
	• **Connection type head A:** Female connector, M12, 5-pin, straight, A-coded • **Connection type head B:** Male connector, M12, 5-pin, straight, A-coded • **Signal type:** Sensor/actuator cable • **Cable:** 10 m, 5-wire, PUR, halogen-free • **Description:** Sensor/actuator cable, unshielded • **Application:** Zones with oils and lubricants, Drag chain operation, Robot	YF2A15-100UB5M2A15	2096011
	• **Connection type head A:** Female connector, M12, 8-pin, straight, A-coded • **Connection type head B:** Male connector, M12, 8-pin, straight, A-coded • **Signal type:** Sensor/actuator cable • **Cable:** 2 m, 8-wire, PUR, halogen-free • **Description:** Sensor/actuator cable, unshielded • **Application:** Zones with oils and lubricants, Drag chain operation, Robot	YF2A18-020UA5M2A18	2096033
	• **Connection type head A:** Female connector, M12, 8-pin, straight, A-coded • **Connection type head B:** Male connector, M12, 8-pin, straight, A-coded • **Signal type:** Sensor/actuator cable • **Cable:** 5 m, 8-wire, PUR, halogen-free • **Description:** Sensor/actuator cable, unshielded • **Application:** Zones with oils and lubricants, Drag chain operation, Robot	YF2A18-050UA5M2A18	2096034
	• **Connection type head A:** Female connector, M12, 8-pin, straight, A-coded • **Connection type head B:** Male connector, M12, 8-pin, straight, A-coded • **Signal type:** Sensor/actuator cable • **Cable:** 10 m, 8-wire, PUR, halogen-free • **Description:** Sensor/actuator cable, unshielded • **Application:** Zones with oils and lubricants, Drag chain operation, Robot	YF2A18-100UA5M2A18	2096035
	• **Connection type head A:** Female connector, M12, 8-pin, straight, A-coded • **Connection type head B:** Flying leads • **Signal type:** Sensor/actuator cable • **Cable:** 2 m, 8-wire, PUR, halogen-free • **Description:** Sensor/actuator cable, unshielded • **Application:** Zones with oils and lubricants, Drag chain operation, Robot	YF2A18-020UA5XLEAX	2095652
Photoelectric sensors			
	GL10-P4151	GL10-P4151	1069860
	GL6-P0211S49	GL6-P0211S49	1070568
	GTB10-P4411S01	GTB10-P4411S01	1066852
	GTB6-P7441S56	GTB6-P7441S56	1077541
Safety switching amplifier			
	• **Applications:** Output expansion module for OSSDs • **Compatible sensor types:** Safety sensors with OSSDs • **Connection type:** Front connector with spring terminals • **Restart interlock:** no • **External device monitoring (EDM):** Via path • **Outputs:** 2 enabling current paths (safe), 1 feedback current path (for use as external device monitoring, not safe) • **Housing width:** 18 mm	RLY3-OSSD100	1085343
	• **Applications:** Output expansion module for OSSDs • **Compatible sensor types:** Safety sensors with OSSDs • **Connection type:** Front connector with spring terminals • **Restart interlock:** no • **External device monitoring (EDM):** Via path • **Outputs:** 4 enabling current paths (safe), 1 feedback current path (for use as external device monitoring, not safe), 1 signaling current path (not safe) • **Housing width:** 28 mm	RLY3-OSSD400	1099971
SP1 system plug			
	• **System plug:** SP1 • **Connection type:** Male connector M12, 5-pin • **Extension connection:** –	1000	2076832

	Brief description	Type	Part no.
	• **System plug:** SP1 • **Connection type:** Male connector M12, 5-pin • **Extension connection:** Female connector M12, 5-pin	1100	2076833
	• **System plug:** SP1 • **Connection type:** Male connector M12, 8-pin • **Extension connection:** –	1200	2076834
	• **System plug:** SP1 • **Connection type:** Male connector M12, 8-pin • **Extension connection:** Female connector M12, 5-pin	1300	2076835
Sensor Integration Gateway			
	• **Further functions:** Web server integrated, USB connection for easy configuration of the SIG200 Sensor Integration Gateway with SOPAS ET, the engineering tool from SICK, logic editor is available for easy configuration of logic functions • **Connection CONFIG:** 1 x M8, 4-pin female connector, USB 2.0 (USB-A) • **Logic editor:** yes • **Communication interface:** IO-Link, USB, Ethernet, PROFINET, REST API • **Product category:** IO-Link Master	SIG200-0A0412200	1089794
	• **Description:** The SIG200 Sensor Integration Gateway is an IO-Link master with 4 configurable ports through which the IO-Link devices or standard inputs or standard outputs can be connected to a PLC or cloud application using the REST API. • **Further functions:** Web server integrated, USB connection for easy configuration of the SIG200 Sensor Integration Gateway with SOPAS ET, the engineering tool from SICK, logic editor is available for easy configuration of logic functions • **Connection CONFIG:** 1 x M8, 4-pin female connector, USB 2.0 (USB-A) • **Logic editor:** yes • **Communication interface:** IO-Link, USB, Ethernet, EtherNet/IP™, REST API • **Product category:** IO-Link Master	SIG200-0A0512200	1089796
	• **Further functions:** Web server integrated, USB connection for easy configuration of the SIG200 Sensor Integration Gateway with SOPAS ET, the engineering tool from SICK, logic editor is available for easy configuration of logic functions • **Connection CONFIG:** 1 x M8, 4-pin female connector, USB 2.0 (USB-A) • **Logic editor:** yes • **Communication interface:** IO-Link, USB, Ethernet, REST API • **Product category:** IO-Link Master	SIG200-0A0G12200	1102605

SICK AT A GLANCE

SICK is one of the leading manufacturers of intelligent sensors and sensor solutions for industrial applications. A unique range of products and services creates the perfect basis for controlling processes securely and efficiently, protecting individuals from accidents and preventing damage to the environment.

We have extensive experience in a wide range of industries and understand their processes and requirements. With intelligent sensors, we can deliver exactly what our customers need. In application centers in Europe, Asia and North America, system solutions are tested and optimized in accordance with customer specifications. All this makes us a reliable supplier and development partner.

Comprehensive services complete our offering: SICK LifeTime Services provide support throughout the machine life cycle and ensure safety and productivity.

For us, that is "Sensor Intelligence."

WORLDWIDE PRESENCE:

Contacts and other locations –www.sick.com

SICK
Sensor Intelligence.