Product data sheet

YG8U13-020UA1M2A13

Sensor/actuator cable

PLUG CONNECTORS AND CABLES

SICK
Sensor Intelligence.

Ordering information

Type	Part no.
YG8U13-020UA1M2A13	2095748

Other models and accessories ➜ www.sick.com/Sensor_actuator_cable

Detailed technical data

Technical specifications

Connection type head A	Female connector, M8, 3-pin, angled, A-coded
Connection type head B	Male connector, M12, 3-pin, straight, A-coded
Locking plug connector	Screw connection
Connector material	TPU
Connector color	Black
Locking nut material	Zinc die-cast, nickel-plated
Seal material	FKM
Tightening torque	0.4 Nm (M8), 0.6 Nm (M12)
Width across flats	9 (M8), 13 (M12)
Cable	2 m, 3-wire, PUR, halogen-free
Jacket material	PUR, halogen-free
Jacket color	Black
Cable diameter	4.1 mm
Conductor cross section	0.25 mm²
Shielding	Unshielded
Bending radius	
Flexible use	> 10 x cable diameter
Stationary position	> 5 x cable diameter
Drag chain operation	> 10 x cable diameter
Bending cycles	10,000,000
Nominal voltage, cable	300 V AC
Test voltage, cable	2,500 V AC
Reference voltage	
	50 V AC
	60 V DC
Rated impulse voltage	1.5 kV
Current loading	4 A
Traversing speed	3 m/s
Travelling distance	10 m
Acceleration	≤ 10 m/s²

Signal type	Sensor/actuator cable
Torsion force	180° / 1 m
Torsion cycles	2,000,000
Cycles per minutes	35
Application	Zones with oils and lubricants Drag chain operation Robot
Authorizations	UL
UL File No.	E335179
Enclosure rating	IP65 / IP66K / IP67
Operating temperature	
Flexible use	–25 °C ... +80 °C
Stationary position	–40 °C ... +80 °C
Drag chain operation	–25 °C ... +80 °C
Head	–25 °C ... +85 °C
Contamination rating	3
Insulation resistance	100 MΩ
Overvoltage category	III
Specific insulation resistance	30 mΩ
Thermal resistance, piping	Flame retardant according to UL 1581, horizontal flame test/CSA FT2 / IEC 60332-1, IEC 60332-2-2

Classifications

ECLASS 5.0	19030312
ECLASS 5.1.4	19030312
ECLASS 6.0	27060304
ECLASS 6.2	27060304
ECLASS 7.0	27060304
ECLASS 8.0	27060304
ECLASS 8.1	27060304
ECLASS 9.0	27060304
ECLASS 10.0	27060304
ECLASS 11.0	27060304
ECLASS 12.0	27060304
ETIM 5.0	EC000830
ETIM 6.0	EC000830
ETIM 7.0	EC003249
ETIM 8.0	EC003249
UNSPSC 16.0901	26121604

Dimensional drawing (Dimensions in mm (inch))

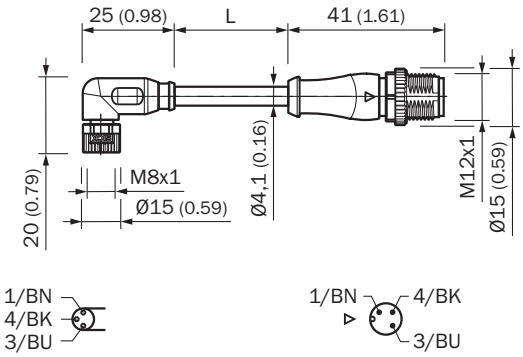

Recommended accessories

Other models and accessories ➜ www.sick.com/Sensor_actuator_cable

	Brief description	Type	Part no.
Other mounting accessories			
	1 piece, M8 mounting key set for SW9 with calibrated torque 0.4 Nm	TOOL-TW04M08AF09	5337207
	1 piece, M12 mounting key set for SW13 with calibrated torque 0.6 Nm	TOOL-TW06M12AF13	5337208

SICK AT A GLANCE

SICK is one of the leading manufacturers of intelligent sensors and sensor solutions for industrial applications. A unique range of products and services creates the perfect basis for controlling processes securely and efficiently, protecting individuals from accidents and preventing damage to the environment.

We have extensive experience in a wide range of industries and understand their processes and requirements. With intelligent sensors, we can deliver exactly what our customers need. In application centers in Europe, Asia and North America, system solutions are tested and optimized in accordance with customer specifications. All this makes us a reliable supplier and development partner.

Comprehensive services complete our offering: SICK LifeTime Services provide support throughout the machine life cycle and ensure safety and productivity.

For us, that is "Sensor Intelligence."

WORLDWIDE PRESENCE:

Contacts and other locations –www.sick.com

SICK
Sensor Intelligence.