Product data sheet

LFP0025-B4NMB

LFP Cubic

LEVEL SENSORS

SICK
Sensor Intelligence.

Illustration may differ

Ordering information

Type	Part no.
LFP0025-B4NMB	1060172

Other models and accessories ➜ www.sick.com/LFP_Cubic

Detailed technical data

Features

Medium	Fluids
Measurement	Switch, Continuous
Probe type	Without probe
Process pressure	–1 bar ... 10 bar
Process temperature	–20 °C ... +100 °C
RoHS certificate	✓
IO-Link	✓
cULus certificate	✓

Performance

Accuracy of sensor element	± 5 mm [1]
Reproducibility	≤ 2 mm
Resolution	< 2 mm
Response time	< 400 ms
Dielectricity constant	≥ 5 for rod probe / cable probe ≥ 1.8 with coaxial tube
Conductivity	No limitation
Maximum level change	≤ 500 mm/s
Deactivated area at process connection	25 mm [2]
Deactivated area at end of probe	≥ 10 mm [1]
MTTF	194.3 years (EN ISO 13849-1)
Display	✓

[1] With water under reference conditions.
[2] With parameterized container with water under reference conditions, otherwise 40 mm.

Electronics

Supply voltage	12 V DC ... 30 V DC [1]
Power consumption	≤ 100 mA at 24 V DC without output load
Initialization time	≤ 5 s
Protection class	III
Connection type	Round connector M12 x 1, 5-pin
Output signal	1 x PNP + 1 x PNP/NPN + 4 mA ... 20 mA / 0 V ... 10 V
Output load	4 mA ... 20 mA < 500 Ohm at Uv > 15 V, 4 mA ... 20 mA < 350 Ohm at Uv > 12 V, 0 V ... 10 V > 750 Ohm at Uv 14 ≥ V
Hysteresis	Min. 2 mm, free adjustable
Output current	< 100 mA
Inductive load	< 1 H
Capacitive load	100 nF
Enclosure rating	IP67: EN 60529
Temperature drift	< 0.1 mm/K
Lower signal level	3.8 mA ... 4 mA
Upper signal level	20 mA ... 20.5 mA
EMC	EN 61326-2-3, 2014/30/EU

[1] All connections are polarity protected. All outputs are overload and short-circuit protected.

Mechanics

Wetted parts	1.4404, PTFE FKM
Process connection	¾" NPT
Housing material	Plastic PBT
Max. probe load	≤ 6 Nm

Ambient data

Ambient operating temperature	–20 °C ... +60 °C
Ambient temperature, storage	–40 °C ... +80 °C

Classifications

ECLASS 5.0	27200513
ECLASS 5.1.4	27200513
ECLASS 6.0	27200513
ECLASS 6.2	27200513
ECLASS 7.0	27200513
ECLASS 8.0	27200513
ECLASS 8.1	27200513
ECLASS 9.0	27200513
ECLASS 10.0	27200513
ECLASS 11.0	27200513
ECLASS 12.0	27200513
ETIM 5.0	EC001447

ETIM 6.0	EC001447
ETIM 7.0	EC001447
ETIM 8.0	EC001447
UNSPSC 16.0901	41113710

Type code

Type code

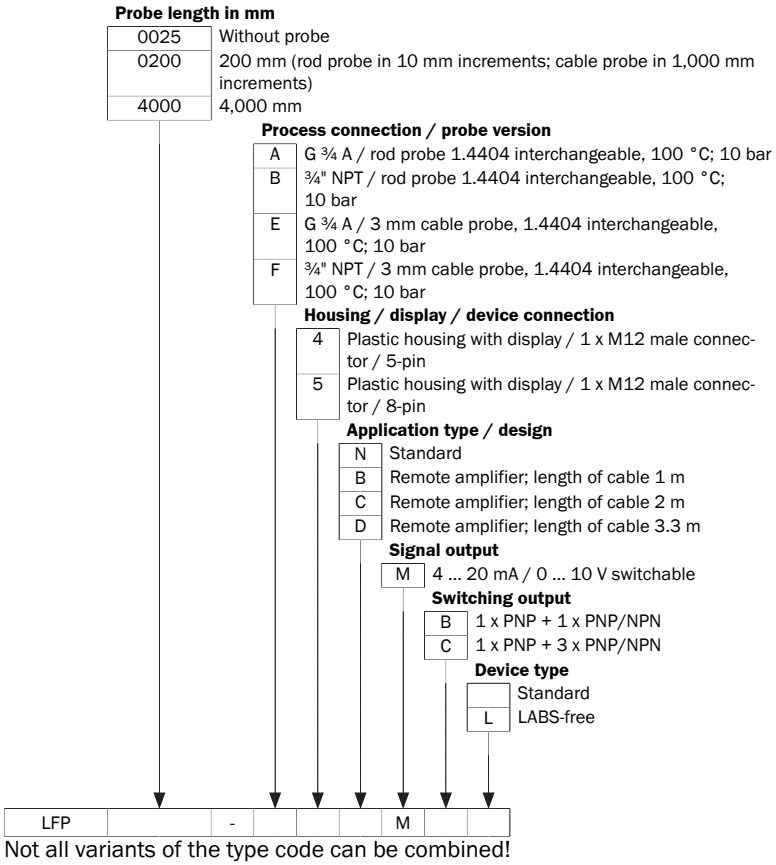

Not all variants of the type code can be combined!

Dependence between length of coaxial cable and probe length

Length of coaxial cable (mm)	Max. probe length (mm) foam mode deactivated	Max. probe length (mm) foam mode active
1000	4,000	2000
2000	3,000	1500
3300	1,000	500

Dimensional drawing (Dimensions in mm (inch))

Dimensional drawing: rod probe

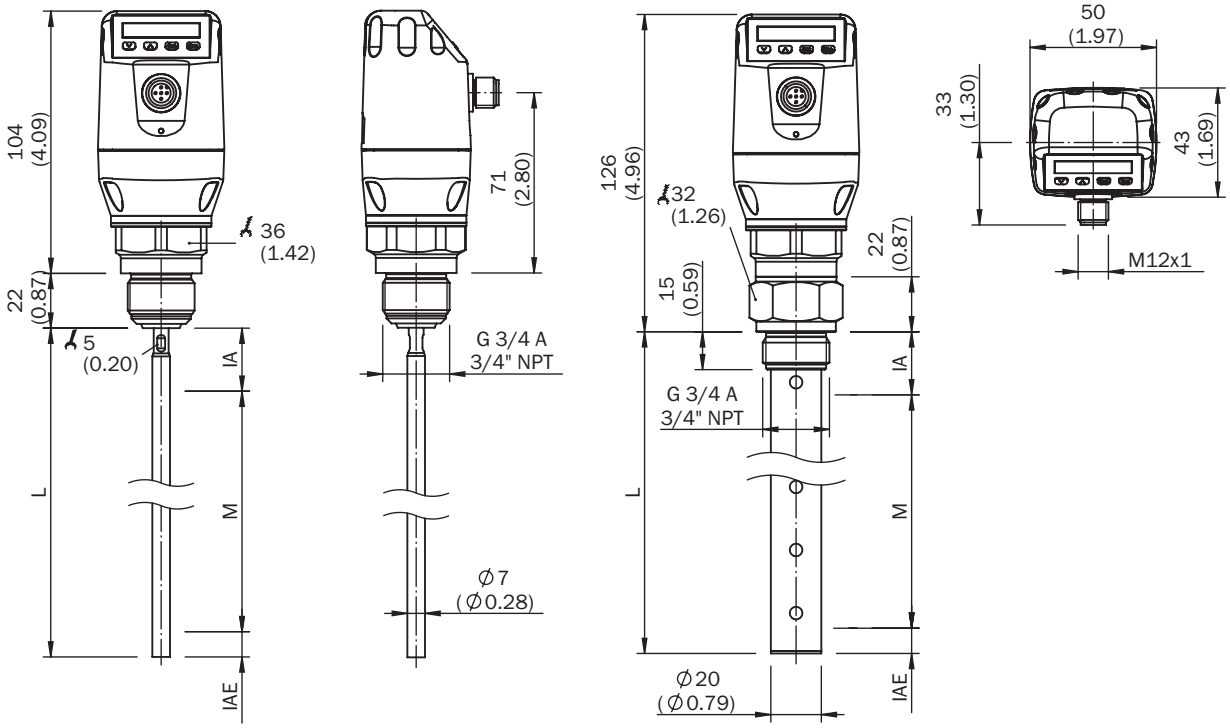

monoprobe

with coaxial tube

① M: measuring range
② L: Probe length
③ IA: Inactive area at process connection 25 mm (0.98")
④ IAE: Inactive area at probe end 10 mm (0.39")

Connection type

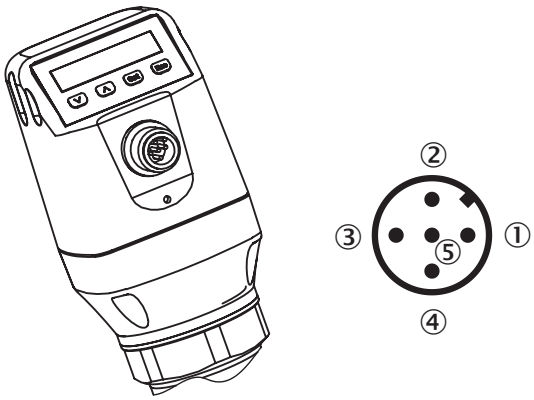

① L^+: Supply voltage, brown
② Q_A: Analog current-/voltage output, white
③ M: Ground, reference ground for current-/voltage output, blue
④ C/Q_1: Switching output 1, PNP/IO-Link-communication, black
⑤ Q_2: Switching output 2, PNP/NPN, grey

Instruction for installation

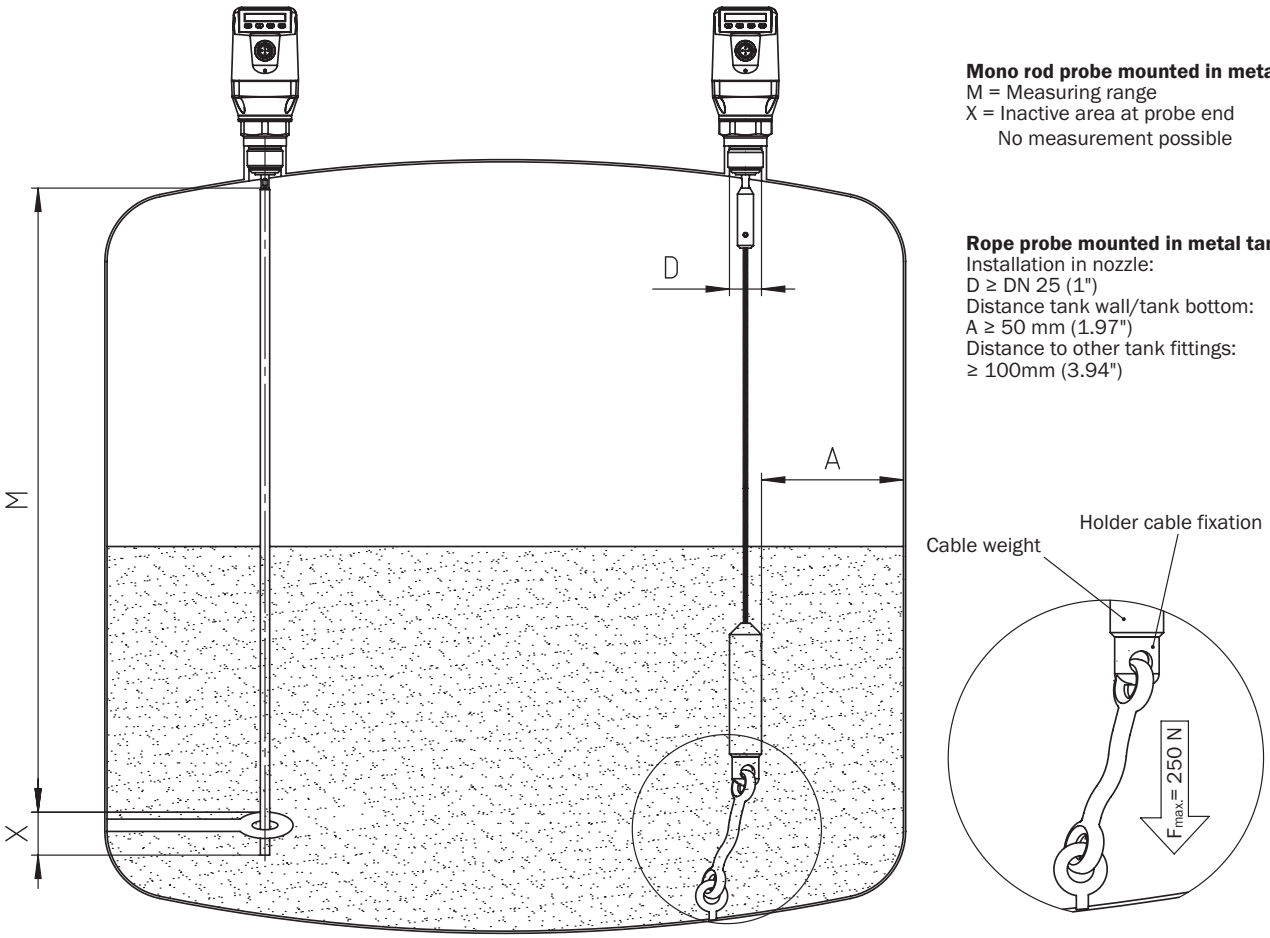

Mono rod probe mounted in metal tank
M = Measuring range
X = Inactive area at probe end
No measurement possible

Rope probe mounted in metal tank
Installation in nozzle:
D ≥ DN 25 (1")
Distance tank wall/tank bottom:
A ≥ 50 mm (1.97")
Distance to other tank fittings:
≥ 100mm (3.94")

Installation in a metal immersion tube or metal bypass

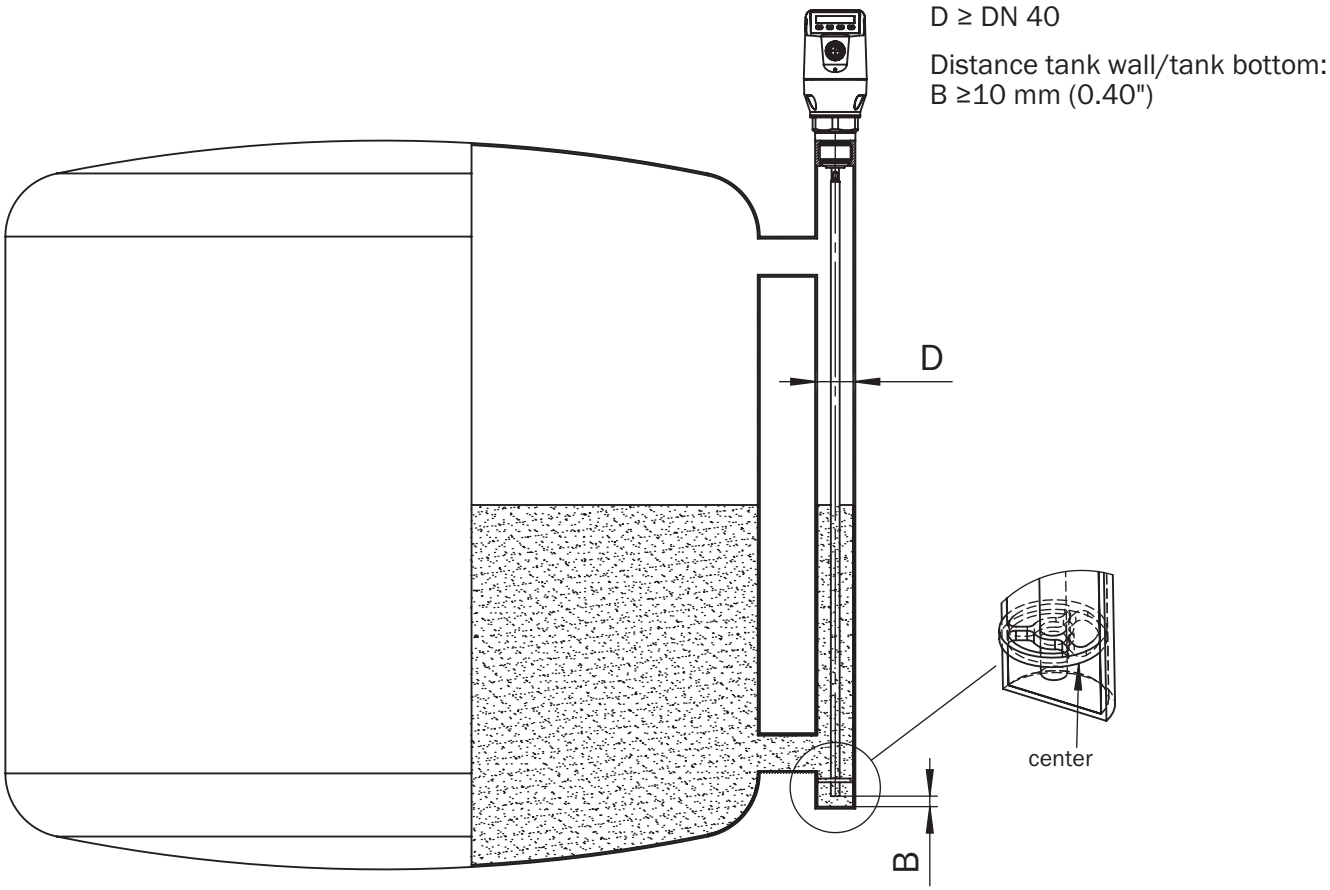

Installation in a metal tank

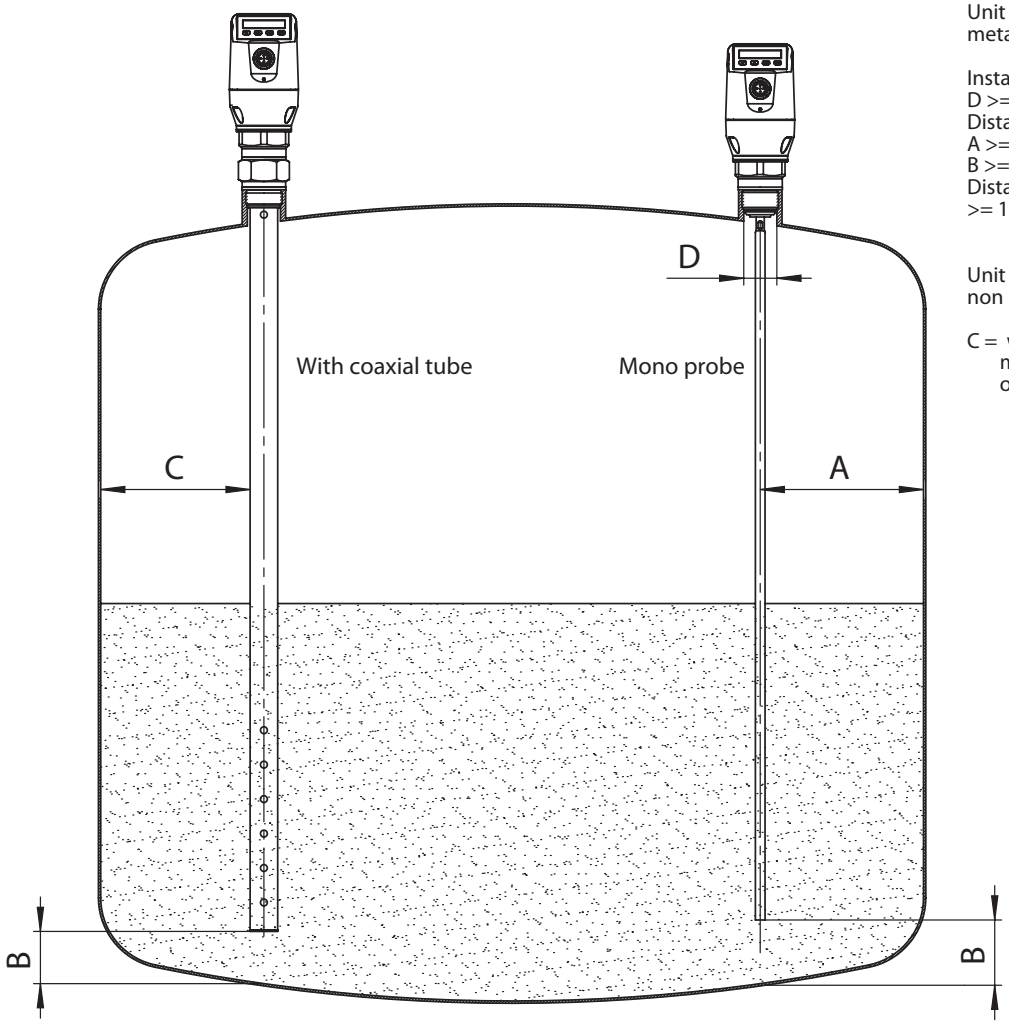

Unit with mono probe mounted in metal tank

Installation in nozzle:
D >= DN 25 (1")
Distance tank wall/tank bottom:
A >= 50 mm (1.97")
B >= 10 mm (0.40")
Distance to other tank fittings >= 100mm (3.94")

Unit with coaxial tube for metal and non metal tank

C = with a coaxial tube there are no minimum distances to the tank wall or to other tank fittings required

Recommended accessories

Other models and accessories ➜ www.sick.com/LFP_Cubic

	Brief description	Type	Part no.
Spare parts			
	Spare titan probe for LFP Cubic, length 1 m	BEF-ER-TS1000-LFPC	2081042
	Spare titan probe for LFP Cubic, length 2 m	BEF-ER-TS2000-LFPC	2081043
Mounting brackets and plates			
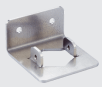	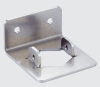	BEF-FL-304LFP-HLDR	2077391

Recommended services

Additional services ➜ www.sick.com/LFP_Cubic

	Type	Part no.
Function Block Factory		
• **Description:** The Function Block Factory supports common programmable logic controllers (PLCs) from various manufacturers, such as Siemens, Beckhoff, Rockwell Automation and B&R. More information on the FBF can be found here. • **Note:** You can configure your function block at Function Block Factory. As a login please use your SICK ID.	Function Block Factory	On request

SICK AT A GLANCE

SICK is one of the leading manufacturers of intelligent sensors and sensor solutions for industrial applications. A unique range of products and services creates the perfect basis for controlling processes securely and efficiently, protecting individuals from accidents and preventing damage to the environment.

We have extensive experience in a wide range of industries and understand their processes and requirements. With intelligent sensors, we can deliver exactly what our customers need. In application centers in Europe, Asia and North America, system solutions are tested and optimized in accordance with customer specifications. All this makes us a reliable supplier and development partner.

Comprehensive services complete our offering: SICK LifeTime Services provide support throughout the machine life cycle and ensure safety and productivity.

For us, that is "Sensor Intelligence."

WORLDWIDE PRESENCE:

Contacts and other locations –www.sick.com

SICK
Sensor Intelligence.