Product data sheet

IQ20-07BPPDQ0S

IQV

INDUCTIVE PROXIMITY SENSORS

SICK
Sensor Intelligence.

Ordering information

Type	Part no.
IQ20-07BPPDQ0S	6042045

Other models and accessories ➜ www.sick.com/IQV

Detailed technical data

Features

Housing	Rectangular
Dimensions (W x H x D)	20 mm x 32 mm x 8 mm
Sensing range S_n	7 mm
Safe sensing range S_a	5.67 mm
Installation type	Flush
Switching frequency	150 Hz
Connection type	Cable with M12 male connector, 4-pin, 0.3 m
Switching output	PNP
Output function	Complementary
Electrical wiring	DC 4-wire
Enclosure rating	IP67 [1]

[1] According to EN 60529.

Mechanics/electronics

Supply voltage	10 V DC ... 30 V DC
Ripple	≤ 10 % [1]
Voltage drop	< 2.5 V [2]
Time delay before availability	≤ 20 ms
Hysteresis	1 % ... 15 %
Reproducibility	± 5 % [3] [4]
Temperature drift (of S_r)	± 10 %
EMC	According to EN 60947-5-2
Continuous current I_a	≤ 200 mA
Cable material	PUR

[1] Of V_S.
[2] At I_a max.
[3] Supply voltage U_B and constant ambient temperature Ta.
[4] Of Sr.

Short-circuit protection	✓
Reverse polarity protection	✓
Shock and vibration resistance	30 g, 11 ms / 10 ... 55 Hz, 1 mm
Ambient operating temperature	–25 °C ... +70 °C
Housing material	Zinc diecast, GD Zn
Sensing face material	Plastic, PA12

[1] Of V_S.
[2] At I_a max.
[3] Supply voltage U_B and constant ambient temperature Ta.
[4] Of Sr.

Safety-related parameters

$MTTF_D$	1,080 years
DC_{avg}	0%
T_M (mission time)	20 years

Reduction factors

Note	The values are reference values which may vary
Stainless steel (V2A, 304)	Approx. 0.7
Aluminum (Al)	Approx. 0.4
Copper (Cu)	Approx. 0.3
Brass (Br)	Approx. 0.4

Installation note

Remark	Associated graphic see "Installation"
A	0 mm
B	20 mm
C	20 mm
D	21 mm
E	0 mm
F	60 mm

Classifications

ECLASS 5.0	27270101
ECLASS 5.1.4	27270101
ECLASS 6.0	27270101
ECLASS 6.2	27270101
ECLASS 7.0	27270101
ECLASS 8.0	27270101
ECLASS 8.1	27270101
ECLASS 9.0	27270101
ECLASS 10.0	27270101
ECLASS 11.0	27270101
ECLASS 12.0	27274001
ETIM 5.0	EC002714

ETIM 6.0	EC002714
ETIM 7.0	EC002714
ETIM 8.0	EC002714
UNSPSC 16.0901	39122230

Installation note

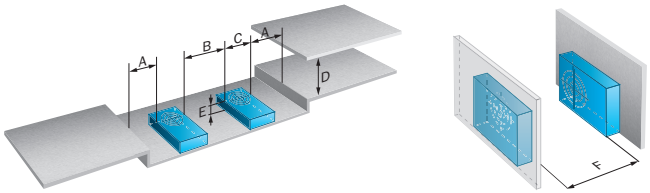

Connection type

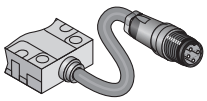

Connection diagram

Cd-006

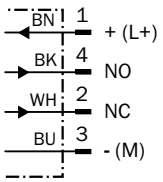

Dimensional drawing (Dimensions in mm (inch))

IQ20, cable with M12 male connector, 4-pin

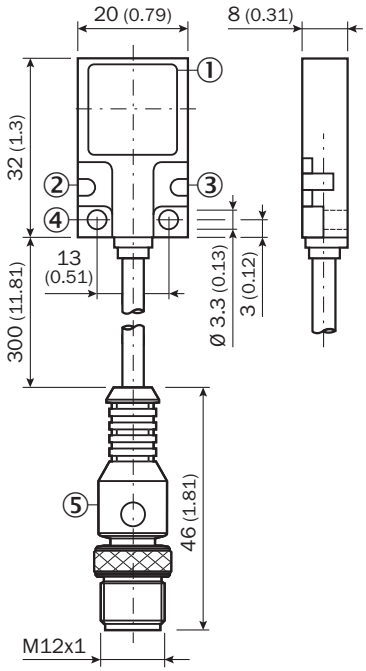

① Sensing face
② Operational status LED, green
③ LED output state, yellow
④ Fixing hole
⑤ Connection

SICK AT A GLANCE

SICK is one of the leading manufacturers of intelligent sensors and sensor solutions for industrial applications. A unique range of products and services creates the perfect basis for controlling processes securely and efficiently, protecting individuals from accidents and preventing damage to the environment.

We have extensive experience in a wide range of industries and understand their processes and requirements. With intelligent sensors, we can deliver exactly what our customers need. In application centers in Europe, Asia and North America, system solutions are tested and optimized in accordance with customer specifications. All this makes us a reliable supplier and development partner.

Comprehensive services complete our offering: SICK LifeTime Services provide support throughout the machine life cycle and ensure safety and productivity.

For us, that is "Sensor Intelligence."

WORLDWIDE PRESENCE:

Contacts and other locations –www.sick.com

SICK
Sensor Intelligence.