Product data sheet

MICS3-ABAZ90IZ1P01

microScan3

SAFETY LASER SCANNERS

SICK
Sensor Intelligence.

Illustration may differ

Ordering information

Integration in the control system	Sub product family	Protective field range	Number of fields	Number of monitoring cases	Connection type	Type	Part no.
CIP Safety™ over EtherNet/IP™	microScan3 Core - EtherNet/IP	9 m	8	8	M12	MICS3-ABAZ90IZ1P01	1094457

The system plug is pre-assembled on the underside. It can either be mounted on the rear side or the underside.

Other models and accessories → www.sick.com/microScan3

Detailed technical data

Features

Sub product family	microScan3 Core - EtherNet/IP
Model	Sensor including system plug (pre-mounted on the underside)
Application	Indoor
Protective field range	9 m
Warning field range	64 m
Number of simultaneously monitored fields	≤ 4 [1]
Number of fields	8
Number of monitoring cases	8
Scanning angle	275°
Resolution (can be configured)	30 mm 40 mm 50 mm 60 mm 70 mm 150 mm 200 mm
Angular resolution	0.1°
Response time	≥ 115 ms
Protective field supplement	100 mm

[1] Protection, warning or contour detection fields.

Safety-related parameters

Type	Type 3 (IEC 61496)
Safety integrity level	SIL 2 (IEC 61508)
Category	Category 3 (EN ISO 13849)

Performance level	PL d (EN ISO 13849)
PFH_D (mean probability of a dangerous failure per hour)	8.0×10^{-8}
T_M (mission time)	20 years (EN ISO 13849)
Safe state in the event of a fault	The safety outputs via the network are logic 0.

Functions

Restart interlock	✓
Multiple sampling	✓
Monitoring case switching	✓
Simultaneous monitoring	✓
Static protective field switching	✓
Safe contour detection	✓
Contour as a reference	✓
Integrated configuration memory	✓
Measured data output	Via Ethernet

Interfaces

Connection type	
Voltage supply	1 x male connector, M12, 4-pin, A-coded
Fieldbus, industrial network	2 x M12 female connectors, 4-pin, D-coded
Outputs	
OSSD pairs	0
Safety outputs via network	4
Configuration method	PC with Safety Designer (Configuration and Diagnostic Software)
Configuration and diagnostics interface	USB 2.0, Mini-USB, Ethernet
Data interface	
Services	EtherNet/IP™ CIP Safety™ CoLa 2 (configuration and diagnostics using Safety Designer) Data output DHCP SNMP SNTP (client and server)
Fieldbus, industrial network	EtherNet/IP™
Supported protocol versions	Common Industrial Protocol: The CIP Networks Library Volume 1, Edition 3.20 EtherNet/IP™: The CIP Networks Library Volume 2, Edition 1.21 CIP Safety™: The CIP Networks Library Volume 5, Edition 2.13
Topology support	DLR (Device Level Ring)
Display elements	Graphic color display, LEDs

Electrical data

Protection class	III (EN 61140)
Supply voltage V_s	24 V DC (16.8 V DC ... 30 V DC)
Power consumption typical	7.2 W

Mechanical data

Dimensions (W x H x D)	112 mm x 150.7 mm x 111.1 mm (without system plug)

Weight	1.45 kg
Housing material	Aluminum
Housing color	RAL 1021 (yellow), RAL 9005 (black)
Optics cover material	Polycarbonate
Optics cover surface finish	Outside with scratch-resistant coating

Ambient data

Enclosure rating	IP65 (IEC 60529)
Ambient light immunity	≤ 3,000 lx (IEC 61496-3)
Ambient operating temperature	–10 °C ... +50 °C
Storage temperature	–25 °C ... +70 °C
Vibration resistance	IEC 60068-2-6, IEC 60068-2-64, IEC 60721-3-5, IEC TR 60721-4-3, IEC 61496-1, IEC 61496-3
Class	5M1 (IEC 60721-3-5) 3M4 (IEC TR 60721-4-3)
Shock resistance	IEC 60068-2-27, IEC 60721-3-5, IEC TR 60721-4-3, IEC 61496-1, IEC 61496-3
Class	5M1 (IEC 60721-3-5) 3M4 (IEC TR 60721-4-3)
Continuous shock	100 m/s², 16 ms 150 m/s², 6 ms
EMC	IEC 61496-1, IEC 61000-6-2, IEC 61000-6-4

Other information

Type of light	Pulsed laser diode
Wave length	845 nm
Detectable remission factor	1.8% to several 1000%
Laser class	1M (21 CFR 1040.10 and 1040.11, IEC 60825-1)

Classifications

ECLASS 5.0	27272705
ECLASS 5.1.4	27272705
ECLASS 6.0	27272705
ECLASS 6.2	27272705
ECLASS 7.0	27272705
ECLASS 8.0	27272705
ECLASS 8.1	27272705
ECLASS 9.0	27272705
ECLASS 10.0	27272705
ECLASS 11.0	27272705
ECLASS 12.0	27272705
ETIM 5.0	EC002550
ETIM 6.0	EC002550
ETIM 7.0	EC002550
ETIM 8.0	EC002550
UNSPSC 16.0901	39121528

Dimensional drawing (Dimensions in mm (inch))

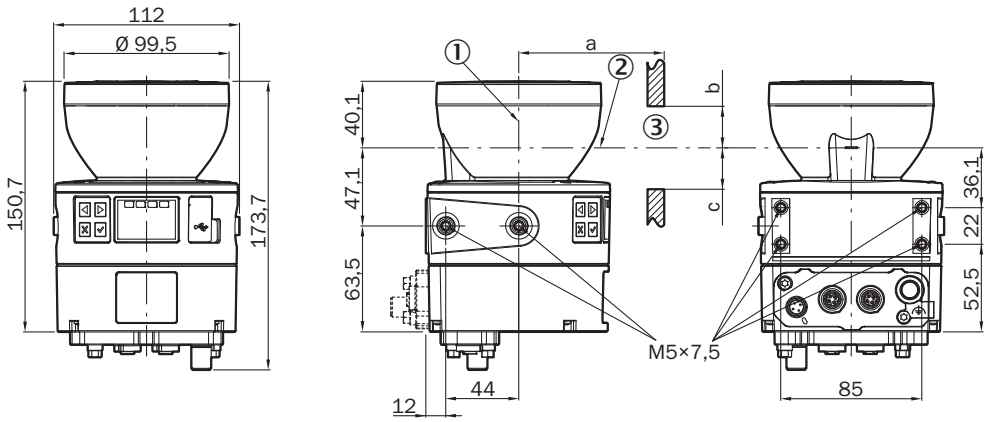

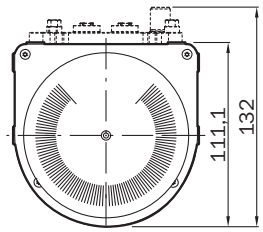

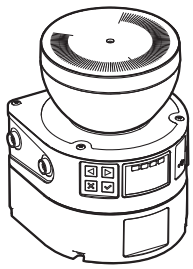

① Mirror axis of rotation
② Scan plane
③ Required viewing slit (a: length of the viewing slit, b: minimum height above the scan plane, c: minimum height below the scan plane. See the operating instructions for details.)

Pinouts

Ethernet (XF1, XF2)

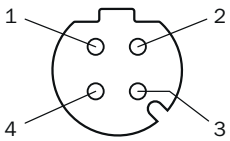

Pin	Designation	Description
1	TX+	Send data +
2	RX+	Receive data +
3	TX-	Send data -
4	RX-	Receive data -
Thread	SH	Shielding
For details see operating instructions		

Voltage supply (XD1)

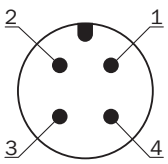

Pin	Designation	Description
1	+24 V DC	Supply voltage +24 V DC
2	n.c.	Not connected
3	0 V DC	Supply voltage 0 V DC
4	FE	Functional earth/shielding
For details see operating instructions		

Recommended accessories

Other models and accessories ➜ www.sick.com/microScan3

	Brief description	Type	Part no.
Mounting brackets and plates			
	1 piece, mounting bracket with protection of optics hood, Stainless steel V2A (1.4301), powder-coated IGP-DURA face 5803A	1b mounting kit	2074242
	1 piece, mounting bracket, heavy-duty version, with protection cover, for floor mounting, height adjustment possible from 90 ... 310 mm, scanner tilt angle: ± 5°. Additional mounting brackets are not required., steel, painted (RAL 1021)	Heavy-duty mounting kit for floor mounting	2102289
	1 piece, mounting bracket 150 mm for floor mounting of microScan3, stainless steel, Bracket and 4 x M5 screws for attaching the microScan3	Mounting bracket 150 mm for floor mounting of microScan3	2112950
	1 piece, mounting bracket 300 mm for floor mounting of microScan3, stainless steel, Bracket and 4 x M5 screws for attaching the microScan3	Mounting bracket 300 mm for floor mounting of microScan3	2112951
	1 piece, mounting bracket, Stainless steel V2A (1.4301), powder-coated IGP-DURA face 5803A	Mounting kit 1a	2073851
	1 piece, alignment bracket, alignment with cross-wise axis and depth axis possible, distance between mounting surface and device: 22.3 mm, only in conjunction with mounting kit 1a (2073851) or 1b (2074242), Stainless steel V2A (1.4301), powder-coated IGP-DURA face 5803A	Mounting kit 2a	2073852
	1 piece, Alignment bracket, alignment with cross-wise axis and depth axis possible, distance between mounting surface and device: 52.3 mm, only in conjunction with mounting kit 1a (2073851) or 1b (2074242), Stainless steel V2A (1.4301), powder-coated IGP-DURA face 5803A	Mounting kit 2b	2074184
Plug connectors and cables			
	• **Connection type head A:** Male connector, M12, 4-pin, straight, D-coded • **Connection type head B:** Male connector, RJ45, 8-pin, straight • **Signal type:** Ethernet • **Cable:** 20 m, 4-wire, CAT5, CAT5e, PUR, halogen-free • **Description:** Ethernet, shielded, Head A: male connector, M12, 4-pin, straight, D coded Head B: male connector, RJ45, 8-pin, straight Cable: PUR, halogen-free, shielded, 2 x 2 x 0.14 mm², Ø 6.4 mm	SSL-2J04-G20ME60	6063700
	• **Connection type head A:** Male connector, M12, 4-pin, angled, D-coded • **Connection type head B:** Male connector, RJ45, 8-pin, straight • **Signal type:** Ethernet • **Cable:** 20 m, 4-wire, CAT5, CAT5e, PUR, halogen-free • **Description:** Ethernet, shielded, Head A: male connector, M12, 4-pin, angled, D coded Head B: male connector, RJ45, 8-pin, straight Cable: PUR, halogen-free, shielded, 2 x 2 x 0.14 mm², Ø 6.4 mm	SSL-2J04-H20ME	6063701

	Brief description	Type	Part no.
Others			
	• **Connection type head A:** Female connector, M12, 4-pin, angled, A-coded • **Connection type head B:** Flying leads • **Signal type:** Sensor/actuator cable • **Cable:** 20 m, 4-wire, PUR, halogen-free • **Description:** Sensor/actuator cable, unshielded • **Application:** Zones with oils and lubricants, Drag chain operation, Robot	YG2A14-200UB3XLEAX	2095770
	• **Connection type head A:** Female connector, M12, 4-pin, angled, A-coded • **Connection type head B:** Flying leads • **Signal type:** Sensor/actuator cable • **Cable:** 2 m, 4-wire, PUR, halogen-free • **Description:** Sensor/actuator cable, unshielded • **Application:** Zones with oils and lubricants, Drag chain operation, Robot	YG2A14-020UB3XLEAX	2095766
	• **Connection type head A:** Female connector, M12, 4-pin, angled, A-coded • **Connection type head B:** Flying leads • **Signal type:** Sensor/actuator cable • **Cable:** 5 m, 4-wire, PUR, halogen-free • **Description:** Sensor/actuator cable, unshielded • **Application:** Zones with oils and lubricants, Drag chain operation, Robot	YG2A14-050UB3XLEAX	2095767
	• **Connection type head A:** Female connector, M12, 4-pin, angled, A-coded • **Connection type head B:** Flying leads • **Signal type:** Sensor/actuator cable • **Cable:** 10 m, 4-wire, PUR, halogen-free • **Description:** Sensor/actuator cable, unshielded • **Application:** Zones with oils and lubricants, Drag chain operation, Robot	YG2A14-100UB3XLEAX	2095768
	• **Connection type head A:** Female connector, M12, 4-pin, straight, A-coded • **Connection type head B:** Flying leads • **Signal type:** Sensor/actuator cable • **Cable:** 2 m, 4-wire, PUR, halogen-free • **Description:** Sensor/actuator cable, unshielded • **Application:** Zones with oils and lubricants, Drag chain operation, Robot	YF2A14-020UB3XLEAX	2095607
	• **Connection type head A:** Female connector, M12, 4-pin, straight, A-coded • **Connection type head B:** Flying leads • **Signal type:** Sensor/actuator cable • **Cable:** 5 m, 4-wire, PUR, halogen-free • **Description:** Sensor/actuator cable, unshielded • **Application:** Zones with oils and lubricants, Drag chain operation, Robot	YF2A14-050UB3XLEAX	2095608
	• **Connection type head A:** Female connector, M12, 4-pin, straight, A-coded • **Connection type head B:** Flying leads • **Signal type:** Sensor/actuator cable • **Cable:** 10 m, 4-wire, PUR, halogen-free • **Description:** Sensor/actuator cable, unshielded • **Application:** Zones with oils and lubricants, Drag chain operation, Robot	YF2A14-100UB3XLEAX	2095609
	• **Connection type head A:** Female connector, M12, 4-pin, straight, A-coded • **Connection type head B:** Flying leads • **Signal type:** Sensor/actuator cable • **Cable:** 20 m, 4-wire, PUR, halogen-free • **Description:** Sensor/actuator cable, unshielded • **Application:** Zones with oils and lubricants, Drag chain operation, Robot	YF2A14-200UB3XLEAX	2095611

	Brief description	Type	Part no.
	• **Brief description:** The software visualizes diagnostic and device information from safety laser scanners in real time, helping to identify error causes faster and reduce maintenance time. • **Supported products:** All microScan3 variants (except for microScan3 Core I/O variants), outdoorScan3 Pro - EtherNet/IP • **Version:** 1.0 • **Note:** With purchase, you accept the product description available under Downloads > Documentation in connection with the General Terms and Conditions for the Supply of Software Products (AVB Software SICK)., With purchase, you accept the product description available under Downloads > Documentation in connection with the General Terms and Conditions for the Supply of Software Products (AVB Software SICK).	SOW/VTL-LI007PCWI0	1116788

SICK AT A GLANCE

SICK is one of the leading manufacturers of intelligent sensors and sensor solutions for industrial applications. A unique range of products and services creates the perfect basis for controlling processes securely and efficiently, protecting individuals from accidents and preventing damage to the environment.

We have extensive experience in a wide range of industries and understand their processes and requirements. With intelligent sensors, we can deliver exactly what our customers need. In application centers in Europe, Asia and North America, system solutions are tested and optimized in accordance with customer specifications. All this makes us a reliable supplier and development partner.

Comprehensive services complete our offering: SICK LifeTime Services provide support throughout the machine life cycle and ensure safety and productivity.

For us, that is "Sensor Intelligence."

WORLDWIDE PRESENCE:

Contacts and other locations –www.sick.com

SICK
Sensor Intelligence.