Product data sheet

SBO-02F12-SM2

Y- and T-splitters

PLUG CONNECTORS AND CABLES

SICK
Sensor Intelligence.

Illustration may differ

Ordering information

Type	Part no.
SBO-02F12-SM2	6053283

Other models and accessories → www.sick.com/Y-_and_T-splitters

Detailed technical data

Technical specifications

Connection type head A	Female connector, M12, 5-pin, A-coded
Connection type head B	Female connector, M12, 8-pin, A-coded
Connection type head C	Male connector, M12, 5-pin, A-coded
Housing color	Black
Shielding, head	Unshielded
Reference voltage	≤ 30 V DC
Current loading	4 A
Note	Male connector M12, 5-pin, to 1 x female connector M12, 8-pin, to 1 x female connector M12, 5-pin, for connecting on IO-Link-Master
Operating temperature	–30 °C ... +90 °C
Enclosure rating	IP67 [1]
Operating temperature	
Head	–30 °C ... +90 °C

[1] Only in fully locked position with its plugs.

Classifications

ECLASS 5.0	27279201
ECLASS 5.1.4	27279201
ECLASS 6.0	27279201
ECLASS 6.2	27279201
ECLASS 7.0	27279201
ECLASS 8.0	27279201
ECLASS 8.1	27279201
ECLASS 9.0	27440108
ECLASS 10.0	27440108
ECLASS 11.0	27440108
ECLASS 12.0	27440108
ETIM 5.0	EC002585
ETIM 6.0	EC002585
ETIM 7.0	EC002585
ETIM 8.0	EC002585

UNSPSC 16.0901	31163032

Dimensional drawing (Dimensions in mm (inch))

SBO-02F12-SM

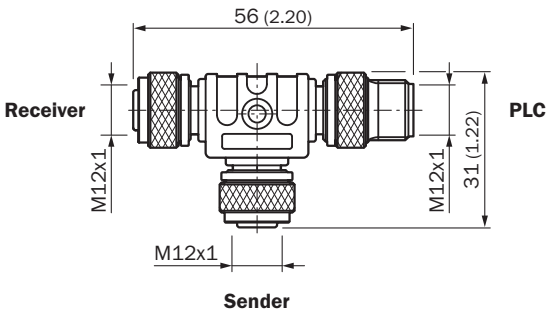

Pinouts

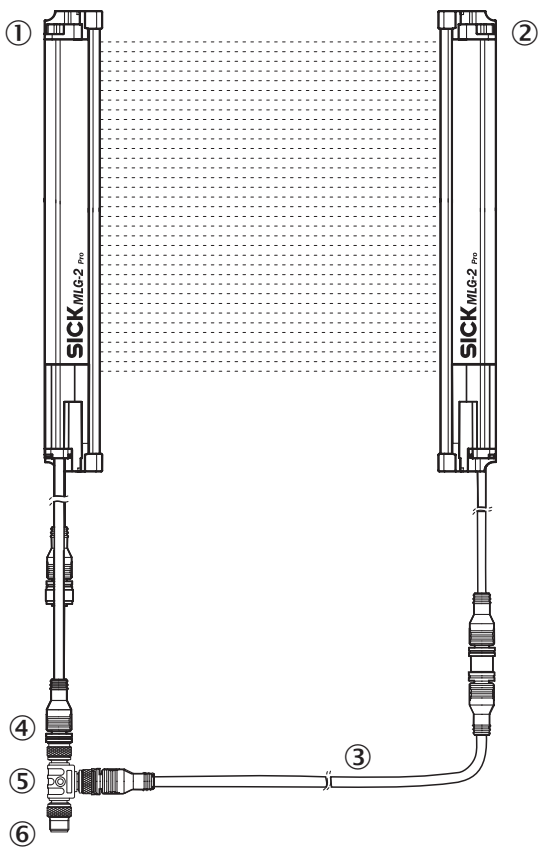

① MLG-2 receiver
② MLG-2 sender
③ Connection cable
④ MLG-2 connection
⑤ T-piece
⑥ Connection

Connection diagram

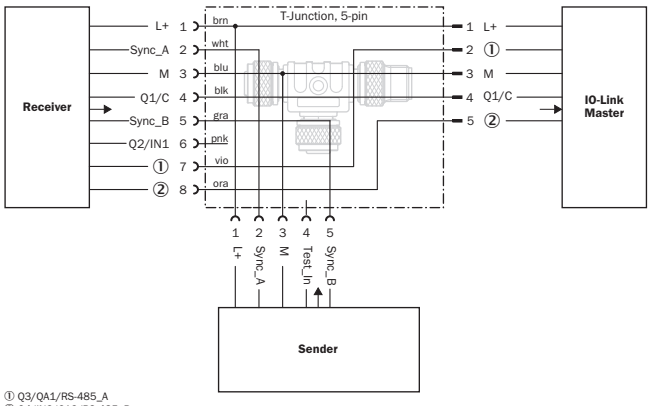

① Q3/QA1/RS-485_A
② Q4/IN2/QA2/RS-485_B

SICK AT A GLANCE

SICK is one of the leading manufacturers of intelligent sensors and sensor solutions for industrial applications. A unique range of products and services creates the perfect basis for controlling processes securely and efficiently, protecting individuals from accidents and preventing damage to the environment.

We have extensive experience in a wide range of industries and understand their processes and requirements. With intelligent sensors, we can deliver exactly what our customers need. In application centers in Europe, Asia and North America, system solutions are tested and optimized in accordance with customer specifications. All this makes us a reliable supplier and development partner.

Comprehensive services complete our offering: SICK LifeTime Services provide support throughout the machine life cycle and ensure safety and productivity.

For us, that is "Sensor Intelligence."

WORLDWIDE PRESENCE:

Contacts and other locations –www.sick.com

SICK
Sensor Intelligence.