Product data sheet

STR1-SASU10P5

STR1

NON-CONTACT SAFETY SWITCHES

SICK
Sensor Intelligence.

Ordering information

Type	Part no.
STR1-SASU10P5	1072712

Consists of sensor (1073232) and actuator (1073223)

Other models and accessories → www.sick.com/STR1

Detailed technical data

Features

System part	Sensor with actuator
Sensor principle	RFID
Number of safe outputs	2
Auxiliary contact (AUX)	1 (Switching behavior complementary to OSSDs)
Safe switch on distance S_{ao}	10 mm (–30 °C ... +70 °C) [1]
Safe switch off distance S_{ar}	25 mm [1]
Active sensor surfaces	3
Active sensor surface	Top, sides (left, right) [2]
Actuation directions	5
Coding	Uniquely coded

[1] Values apply for the frontal alignment of the sensor to the actuator. A detailed display of the alignment options and values can be found in the operating instructions.
[2] For details see operating instructions.

Safety-related parameters

Safety integrity level	SIL 3 (IEC 61508)
Category	Category 4 (EN ISO 13849)
Performance level	PL e (EN ISO 13849)
PFH_D (mean probability of a dangerous failure per hour)	$5{,}21 \times 10^{-9}$
T_M (mission time)	20 years (EN ISO 13849)
Type	Type 4 (EN ISO 14119)
Actuator coding level	High coding level (EN ISO 14119)
Safe state in the event of a fault	At least one safety-related semiconductor output (OSSD) is in the OFF state.

Functions

Safe series connection	None, only individual wiring (with diagnostics)

Interfaces

Connection type	Cable, 5-wire
Length of cable	10 m
Long connecting cable	≤ 200 m
Cable diameter	5.5 mm
Conductor cross section	0.12 mm²
Bend radius (with fixed installation)	> 8 x cable diameter
Bend radius (with moving cable)	> 12 x cable diameter
Cable material	PVC
Conductor material	Copper
Display elements	LEDs
Diagnostics indicator	✓
Status display	✓

Electrical data

Protection class	III (IEC 61140)
Classification according to cULus	Class 2
Supply voltage V_s	24 V DC (19.2 V DC ... 28.8 V DC)
Power consumption	50 mA
Type of output	Self-monitoring semiconductor outputs (OSSDs)
Output current	≤ 100 mA
Response time	40 ms [1)]
Release time	100 ms [1) 2)]
Risk time	80 ms [1) 3)]
Switch-on time	2.5 s [4)]

[1)] In a safe series connection, each downstream safety switch increases the system response time. More response times can be found in the operating instructions.
[2)] Response time on approach to the enable zone.
[3)] Detection time for internal oder external faults (e.g., short-circuit or cross-circuit of output signal switching devices). Follow the detailed information in the operating instructions.
[4)] The time specified applies to one sensor after the supply voltage has been applied to the safety switch. In a safe series connection, 0.1¬s must be added for each sensor. An additional 0.5¬s per taught-in actuator must be added for uniquely coded and permanently coded sensors.

Mechanical data

Dimensions (W x H x D)	40 mm x 18 mm x 26 mm
Weight	436 g
Housing material	VISTAL®

Ambient data

Enclosure rating	IP67, IP69K (EN 60529, ISO 20653)
Ambient operating temperature	–30 °C ... +70 °C [1)]
Storage temperature	–30 °C ... +70 °C

[1)] Only applies for safety switches whose serial numbers begin with number series 1825**** or higher. For safety switches whose serial numbers deviate from this, an ambient operating temperature of-10 °C ... +70 °C applies.
The serial number is displayed on the safety switch over the data matrix code.

Vibration resistance	10 Hz ... 55 Hz, 1 mm (IEC 60068-2-6)
Shock resistance	30 g, 11 ms (IEC 60068-2-27)
EMC	EN IEC 61326-3-1, EN IEC 60947-5-2, EN IEC 60947-5-3, EN 300330 V2.1.1

[1)] Only applies for safety switches whose serial numbers begin with number series 1825**** or higher. For safety switches whose serial numbers deviate from this, an ambient operating temperature of-10 °C ... +70 °C applies.
The serial number is displayed on the safety switch over the data matrix code.

Classifications

ECLASS 5.0	27272403
ECLASS 5.1.4	27272403
ECLASS 6.0	27272403
ECLASS 6.2	27272403
ECLASS 7.0	27272403
ECLASS 8.0	27272403
ECLASS 8.1	27272403
ECLASS 9.0	27272403
ECLASS 10.0	27272403
ECLASS 11.0	27272403
ECLASS 12.0	27274601
ETIM 5.0	EC001829
ETIM 6.0	EC001829
ETIM 7.0	EC001829
ETIM 8.0	EC001829
UNSPSC 16.0901	39122205

Dimensional drawing (Dimensions in mm (inch))

Sensor with cable

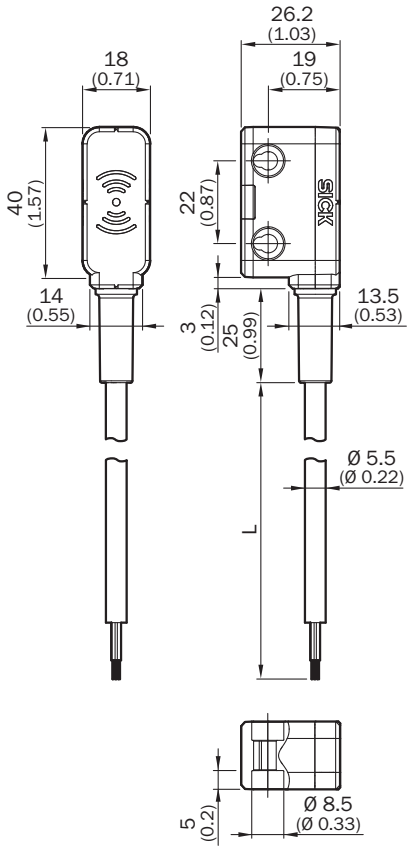

"Standard" actuator

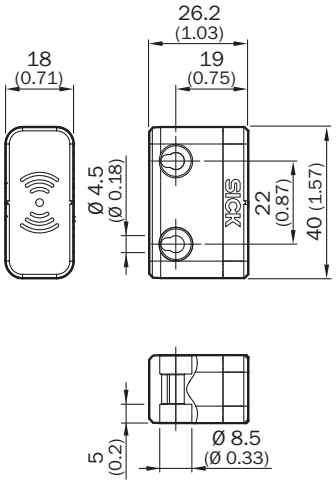

Response range

"Standard" actuator, active front sensor surface

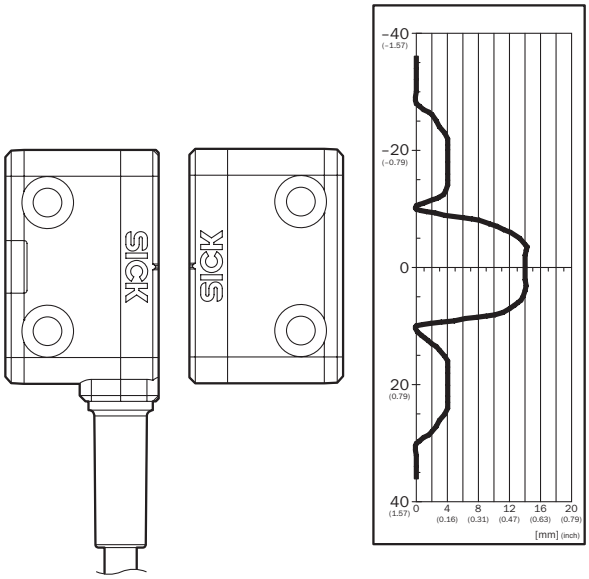

Assured switch on distance Sao 10 mm. Observe border areas for parallel approach: a minimum distance of 6 mm (typical) must be upheld when the actuator moves laterally to the sensor surface. This prevents early triggering due to the side preparation areas.
"Standard" actuator, active side sensor surface

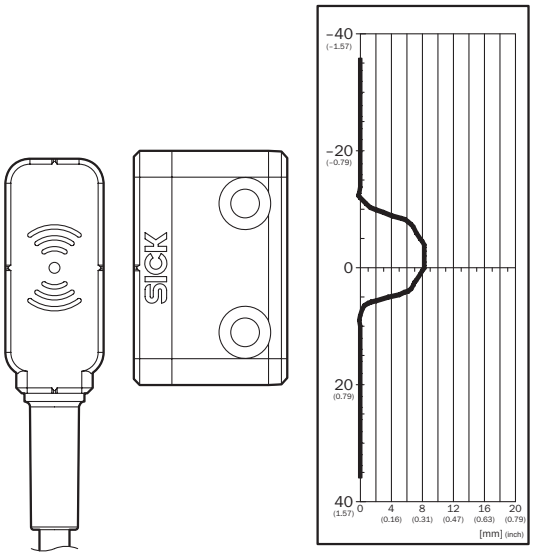

Safe switch on distance S_{ao} 6 mm

Pinouts

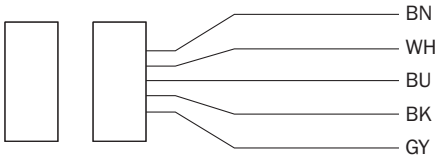

Brown	Voltage supply 24 V DC
White	OSSD 1
Blue	Voltage supply 0 V DC
Black	OSSD 2
Grey	Aux output (not safe)

Recommended accessories

Other models and accessories ➜ www.sick.com/STR1

	Brief description	Type	Part no.
Nuts and screws			
	10 pieces	Safety screws M4 x 20	5333571

SICK AT A GLANCE

SICK is one of the leading manufacturers of intelligent sensors and sensor solutions for industrial applications. A unique range of products and services creates the perfect basis for controlling processes securely and efficiently, protecting individuals from accidents and preventing damage to the environment.

We have extensive experience in a wide range of industries and understand their processes and requirements. With intelligent sensors, we can deliver exactly what our customers need. In application centers in Europe, Asia and North America, system solutions are tested and optimized in accordance with customer specifications. All this makes us a reliable supplier and development partner.

Comprehensive services complete our offering: SICK LifeTime Services provide support throughout the machine life cycle and ensure safety and productivity.

For us, that is "Sensor Intelligence."

WORLDWIDE PRESENCE:

Contacts and other locations –www.sick.com

SICK
Sensor Intelligence.