Product data sheet

RFU620-10101

RFU62x

RFID

SICK
Sensor Intelligence.

Ordering information

Type	Part no.
RFU620-10101	1062602

Other models and accessories ➜ www.sick.com/RFU62x

Detailed technical data

Features

Version	Mid Range
Product category	RFID read/write device with integrated antenna
Radio approval	USA (FCC Part 15.247) Canada (RSS-210) México (NOM-121) Ecuador Costa Rica
Frequency band	UHF (860 MHz ... 960 MHz)
Carrier frequency	902.75 MHz ... 927.25 MHz
Output power	0.32 W (EIRP, 25 dBm)
RFID standard	EPCglobal UHF Class 1 Generation 2, ISO/IEC 18000-6 C
Modulation	PR-ASK
Connection type	Ethernet
Heating	Yes
Read range	≤ 2 m [1)]
Antenna	Integrated
Transmitting power	Adjustable
Polarization	Circular
Axial ratio	Typ. 3 dB
Aperture angle	100°
Front-to-back ratio	> 5 dB
Further functions	Diagnosis, updatable firmware, freely programmable data output format, Heartbeat, triggering, SICK AppSpace functionalities can be enabled with the SD card accessory SDK6U-P00100 (for firmware ≥ 2.0.0)

[1)] Depending on transponder used and ambient conditions.

Mechanics/electronics

Connection type	1 x M12, 17-pin male connector, A-coded 1 x M12, 4-pin female connector, D-coded 1 x USB, 5-pin micro-B socket
Supply voltage	10 V DC ... 30 V DC [1]
Power consumption	Typ. 8 W, with heating typ. 16 W
Housing	Aluminum die cast Plastic (PPS)
Enclosure rating	IP67
Protection class	III
Weight	780 g
Dimensions (L x W x H)	137 mm x 131 mm x 56 mm
MTBF	> 100 years

[1] With heating 20 V DC ... 30 V DC.

Interfaces

Ethernet	✓, TCP/IP, OPC UA
Remark	Companion Spec V1.0 from firmware 2.20
Function	Data interface (read result output), Service interface
Data transmission rate	10/100 MBit/s
PROFINET	✓
Function	PROFINET Single Port, PROFINET Dual Port (optional via external connection module CDF600-2), Data interface (read result output)
Data transmission rate	10/100 MBit/s
EtherNet/IP™	✓
Function	Data interface (read result output)
Data transmission rate	10/100 MBit/s
Serial	✓, RS-232, RS-422
Remark	RS-422 only via 4-wire
Function	Data interface (read result output), Service interface
Data transmission rate	0.3 kBaud ... 115.2 kBaud, AUX: 57.6 kBaud
CAN	✓
Remark	CSN (SICK CAN Sensor Network)
Function	Data interface (read result output)
PROFIBUS DP	✓
Type of fieldbus integration	Optional over external fieldbus module CDF600-2
Function	Data interface (read result output)
CANopen	✓
Function	Data interface (read result output)
EtherCAT	✓
Type of fieldbus integration	Optional over external fieldbus module
Function	Data interface (read result output)
USB	✓

[1] Another alternative is to generate your own configuration tools based on the SICK command language CoLa (e.g. in your own software or on PLC function blocks).

Remark	USB 2.0
Function	Service interface
Digital inputs	2 (physical, 2 additional logical inputs via optional CMC600 parameter memory in CD-B620 / CDM420)
Digital outputs	2 (physical, 2 additional logical outputs via optional CMC600 parameter memory in CD-B620 / CDM420)
Optical indicators	7 LEDs, multi-color (device status) 4 RGB LED (Process feedback)
Operator interfaces	Web server
Configuration software	SOPAS ET [1)]
Programming interface	Application-specific programming using the SICK AppStudio development environment
Memory card	microSD memory card (parameter cloning, data storage)

[1)] Another alternative is to generate your own configuration tools based on the SICK command language CoLa (e.g. in your own software or on PLC function blocks).

Ambient data

Electromagnetic compatibility (EMC)	EN 301489-3
Vibration resistance	EN 60068-2-64:2008-02
Shock resistance	EN 60068-2-27:2009-05
Ambient operating temperature	–40 °C ... +50 °C
Storage temperature	–40 °C ... +70 °C
Permissible relative humidity	90 %, Non-condensing

Classifications

ECLASS 5.0	27280401
ECLASS 5.1.4	27280401
ECLASS 6.0	27280401
ECLASS 6.2	27280401
ECLASS 7.0	27280401
ECLASS 8.0	27280401
ECLASS 8.1	27280401
ECLASS 9.0	27280401
ECLASS 10.0	27280401
ECLASS 11.0	27280401
ECLASS 12.0	27280401
ETIM 6.0	EC002998
ETIM 7.0	EC002998
ETIM 8.0	EC002998
UNSPSC 16.0901	52161523

Dimensional drawing (Dimensions in mm (inch))

Dimensional drawing RFU62x

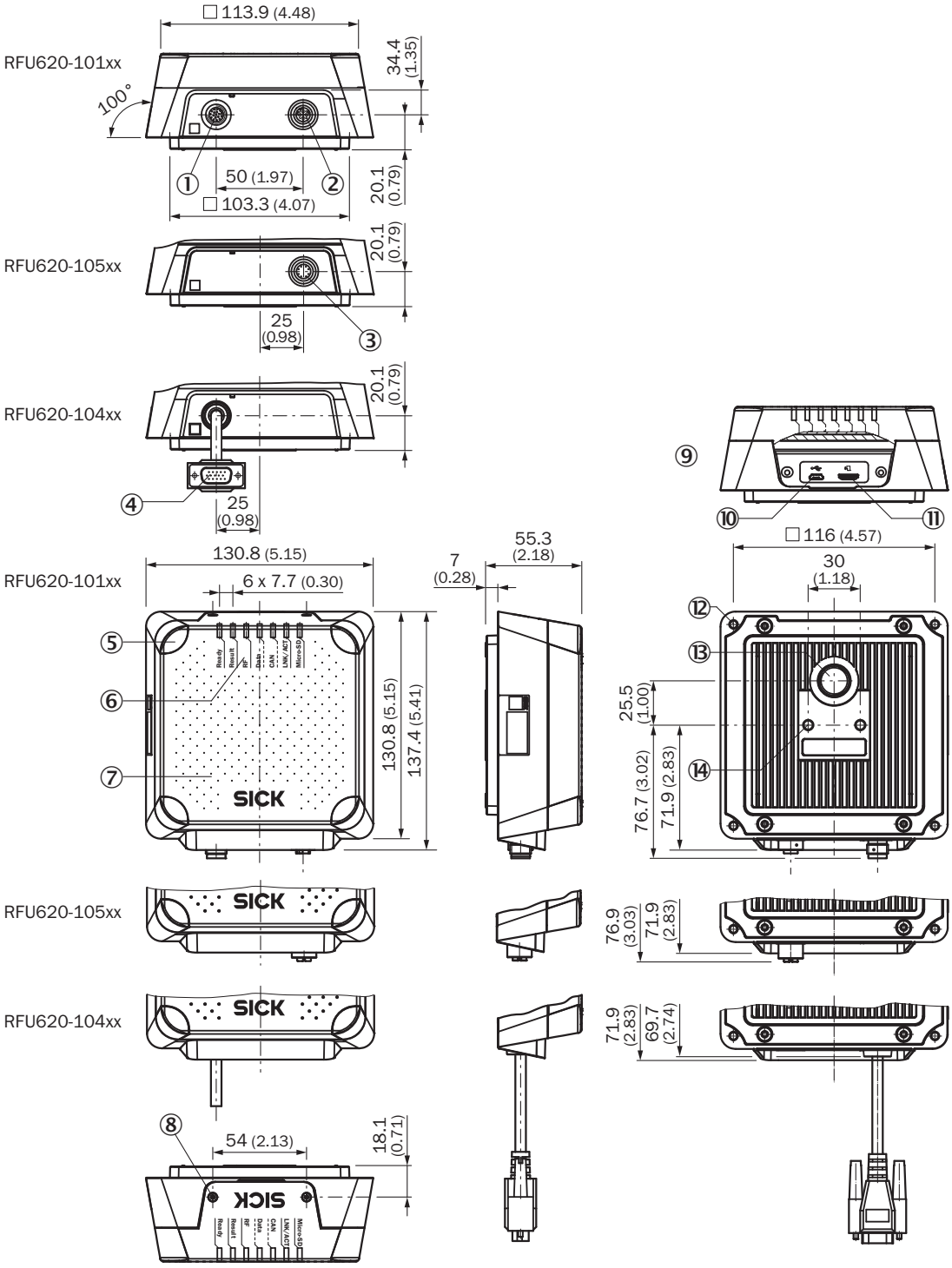

① "Power/AUX/CAN/I/O" connection, 17-pin M12 male connector, A-coded
② "Ethernet" connection, 4-pin M12 female connector, D-coded
③ "Ethernet" connection, 8-pin M12 female connector, X-coded
④ "Power/HOST/AUX/CAN/I/O" connection, 15-pin D-Sub HD male connector, cable 0,9 m
⑤ 4 x LED, multi-colored (process feedback)
⑥ 7 x LED for status display
⑦ Cover with integrated antenna
⑧ Screw (Torx T8), captive (2 x), for side cover
⑨ Side cover opened
⑩ USB socket, type Micro-B
⑪ Slot for microSD memory card
⑫ Blind hole thread M5, 9 mm deep (4 x), for alternatively mounting
⑬ Pressure compensation valve (venitlation element)
⑭ M6 blind tapped holes, 7 mm deep (2 x), for mounting

Radiation pattern

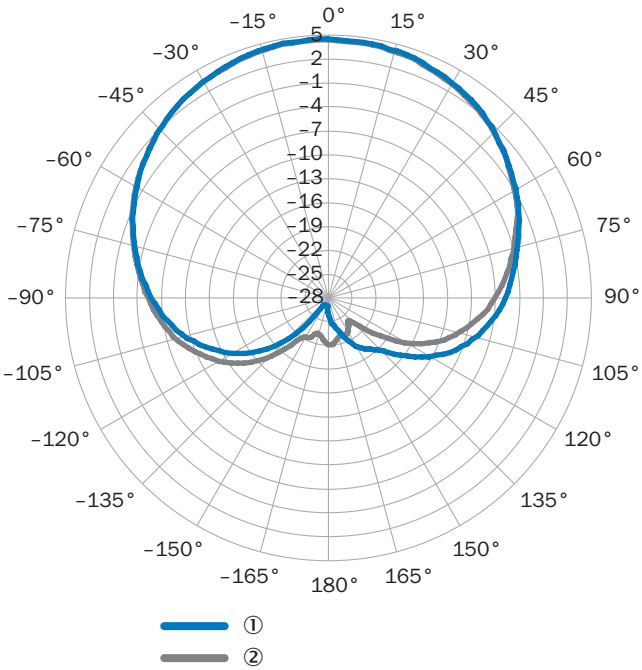

Measured antenna gain in dBic at 868.5 MHz, RHCP (right-hand circularly polarized)
① Horizontal plane (azimuth)
② Vertical plane (elevation)

Connection diagram

PROFINET IO/RT

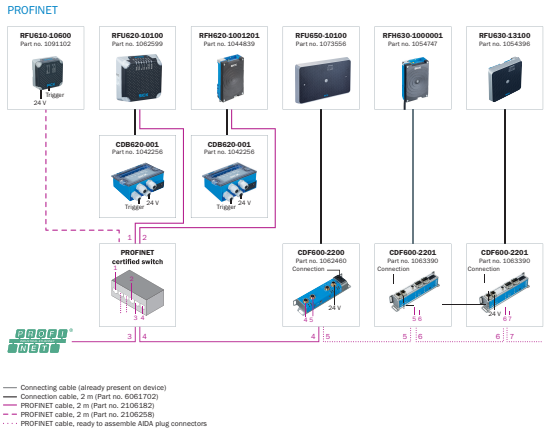

EtherCAT®

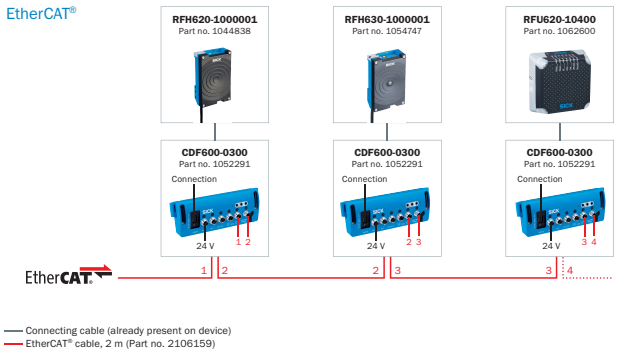

System construction

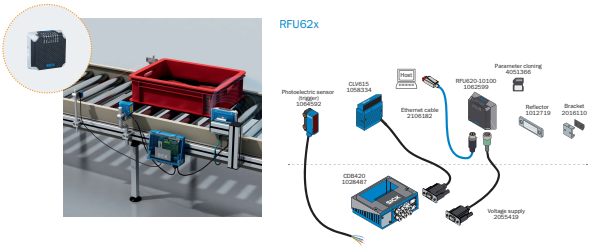

Data combination of barcode and RFID

Overview

SICK AppSpace

Recommended accessories

Other models and accessories → www.sick.com/RFU62x

	Brief description	Type	Part no.
Storage media			
	microSD memory card with 1 GB for industrial use	microSD memory card	4051366
Mounting brackets and plates			
	Simple mounting bracket	Mounting bracket	2071067

	Brief description	Type	Part no.
Plug connectors and cables			
	• **Connection type head A:** Male connector, M12, 4-pin, straight, D-coded • **Connection type head B:** Male connector, RJ45, 4-pin, straight • **Signal type:** Ethernet, PROFINET • **Cable:** 2 m, 4-wire, PUR, halogen-free • **Description:** Ethernet, PROFINET, shielded • **Application:** Drag chain operation, Zones with oils and lubricants	YM2D24-020PN1MRJA4	2106182
Others			
	• **Connection type head A:** Male connector, USB-A • **Connection type head B:** Male connector, Micro-B • **Signal type:** USB 2.0 • **Cable:** 2 m • **Description:** USB 2.0, unshielded	USB cable	6036106
	• **Carrier frequency:** 865 MHz ... 928 MHz • **Memory capacity (UII / user memory):** 128/512 Bit • **Dimensions (L x W x H):** 18 mm x 122 mm x 2 mm	UHF Transponder, rectangular, global	6068184
	• **Carrier frequency:** 865 MHz ... 928 MHz • **Memory capacity (UII / user memory):** 496/128 Bit • **Dimensions (L x W x H):** 18 mm x 122 mm x 2 mm	UHF Transponder, Rectangular, global	6088050
Modules			
	• **Sub product family:** CDB620 • **Supported products:** CLV61x - CLV65x, Lector62x, RFH6xx, RFU62x • **Brief description:** Small connection module for one sensor, 4 cable glands, base for CMC600	CDB620-001	1042256

Recommended services

Additional services ➜ www.sick.com/RFU62x

	Type	Part no.
Commissioning		
• **Product area:** RFID • **Range of services:** Inspection of connection, alignment, optimization of parameters of the RFU/RFH as well as tests, Setup of previously defined functions of reading configuration, data processing and network, interfaces and inputs and outputs • **Travel expenses:** The prices do not include travel costs such as hotel, flight, travel time and expenses. • **Duration:** Additional work will be invoiced separately	Commissioning RFU/RFH	1610018
Maintenance		
• **Product area:** RFID • **Range of services:** Inspection, analysis and restoring of defined functions, Checking and adjustment of reading configuration, data processing, network, interfaces and inputs and outputs as well as operating data • **Duration:** Additional work will be invoiced separately • **Travel expenses:** The prices do not include travel costs such as hotel, flight, travel time and expenses.	Maintenance RFU/RFH	1611424
Extended warranty		
• **Product area:** Identification solutions, machine vision, Detection and ranging solutions, safety camera sensors, Safety laser scanners, Safety radar sensors • **Range of services:** The services correspond to the scope of the statutory manufacturer warranty (SICK general terms of delivery). • **Duration:** Five-year warranty from delivery date.	Extended warranty for a total of five years from delivery date	1680671

SICK AT A GLANCE

SICK is one of the leading manufacturers of intelligent sensors and sensor solutions for industrial applications. A unique range of products and services creates the perfect basis for controlling processes securely and efficiently, protecting individuals from accidents and preventing damage to the environment.

We have extensive experience in a wide range of industries and understand their processes and requirements. With intelligent sensors, we can deliver exactly what our customers need. In application centers in Europe, Asia and North America, system solutions are tested and optimized in accordance with customer specifications. All this makes us a reliable supplier and development partner.

Comprehensive services complete our offering: SICK LifeTime Services provide support throughout the machine life cycle and ensure safety and productivity.

For us, that is "Sensor Intelligence."

WORLDWIDE PRESENCE:

Contacts and other locations –www.sick.com

SICK
Sensor Intelligence.