Product data sheet

DT1000-S11101

Dx1000

LONG RANGE DISTANCE SENSORS

SICK
Sensor Intelligence.

Ordering information

Type	Part no.
DT1000-S11101	1075436

Other models and accessories ➜ www.sick.com/Dx1000

Detailed technical data

Features

Measurement principle	HDDM$^+$

Mechanics/electronics

Supply voltage V_s	DC 18 V ... 30 V, reverse polarity protected
Ripple	≤ 5 V_{pp} [1]
Power consumption	≤ 22 W, With heating switched off [2] ≤ 35 W, With heating switched on [2]
Initialization time	> 15 s
Housing material	Metal (Aluminum alloy (AlSi12))
Window material	Glass
Connection type	Round connector M12 x 1
Indication	Graphical, resistive touch display, status LEDs
Weight	980 g
Dimensions (W x H x D)	84 mm x 104.4 mm x 140.5 mm
Enclosure rating	IP65 [3] IP67 [3]
Protection class	III (EN 61140)

[1] May not fall short of or exceed V_S tolerances.
[2] With external load.
[3] When plugged in with a suitable mating connector.

Safety-related parameters

$MTTF_D$	101 years
DC_{avg}	0%

Performance

Measurement principle	HDDM+
Measurement range min ... max:	0.2 m ... 155 m, 6% remission factor [1) 2) 3)] 0.2 m ... 460 m, 90% remission factor [1) 2) 3)]
Target	Natural objects
Resolution	0.001 mm ... 100 mm, adjustable [4)]
Repeatability	≥ 1 mm, See repeatability characteristic lines [1) 5) 6) 7)]
Accuracy	Typ. ± 15 mm [8) 9)]
Response time	3 ms ... 384 ms [7)]
Measurement cycle time	1 ms 4 ms 16 ms 64 ms 128 ms
Output time	≥ 1 ms [10)]
Light source	Infrared light (905 nm, measuring laser) Visible red light (650 nm, Adjustment aid)
Laser class	1, even with simultaneous operation of measurement and alignment laser (IEC 60825-1:2014, EN 60825-1:2014)
Typ. light spot size (distance)	5 mm x 20 mm (at 1 m) [11)] 20 mm x 20 mm (at 5 m) [11)] 35 mm x 25 mm (at 10 m) [11)] 150 mm x 50 mm (at 50 m) [11)] 290 mm x 80 mm (at 100 m) [11)] 570 mm x 140 mm (at 200 m) [11)]
Filter	Rain and snow filter Fog filter Moving average distance value Kalman filter Moving average speed value
Max. object temperature	+1,400 °C [12)]
Additional function	Selection of relevant distance and signal level range, Selection of first or last echo in selected distance and signal level range
Average laser service life (at 25 °C)	100,000 h [13)]
Max. movement speed	128 m/s

[1)] With max. ambient light 100 kLux sunlight.
[2)] See measuring range diagram.
[3)] Dependent on remission and measuring cycle time.
[4)] Data interface resolution.
[5)] Statistical error 1 σ, environmental conditions constant, min. warm-up time > about 15 min.
[6)] 6% ... 90% remission factor.
[7)] Dependent on selected filter settings and measuring cycle time.
[8)] See measurement accuracy diagram.
[9)] At T = +23 °C and after warm-up time > about 15 min.
[10)] Depending on interface used.
[11)] See light spot size diagram.
[12)] For object temperatures > +1,200 °C, the use of the additional filter is required for high-temperature applications. The additional filter reduces the measuring range limit by approx. 25%.
[13)] Measuring laser.

Interfaces

Ethernet	✓, TCP/IP
Function	Parameterization, output of measurement data
Data transmission rate	10/100 MBit/s
Serial	✓, RS-422
Remark	Switchable to SSI
Function	Parameterization, output of measurement data
SSI	✓
Remark	Switchable to RS-422
Function	Output of measurement data
Inputs/outputs	
In1/Q1	Digital input, digital output (Switchable)
QA/Q2	Analog output, digital output (Switchable)
Q_3	Digital output
Q_4	Digital output
In_2	Digital input
Digital input	Internal pull-down circuit HIGH switching voltage: min. 13 V ... max. supply voltageLOW switching voltage: max. 5 Vswitching functions: deactivate measuring laser, activate alignment laser, preset
Digital output	
Number	2 ... 4 [1) 2)]
Type	Push-pull: PNP/NPN
Maximum output current I_A	≤ 100 mA
Analog output	
Number	1
Type	Current output
Current	4 mA ... 20 mA [3)]
Resolution	16 bit

[1)] Short-circuit protected, switching voltage U_V - 4 V.
[2)] Internal pull-down switching, switching voltage HIGH: min. 13 V ... max. supply voltage, switching voltage LOW: max. 5 V.
[3)] Max. load = (U_V - 7 V) / 21.5 mA.

Ambient data

Ambient temperature, operation	–40 °C ... +55 °C [1)] –40 °C ... +95 °C, operation with cooling case
Ambient temperature, storage	–40 °C ... +75 °C
Max. rel. humidity (not condensing)	≤ 95 %
Effect of air pressure	0.3 ppm/hPa
Effect of air temperature	–1 ppm/K
Temperature drift	Typ. 0.25 mm/K
Typ. Ambient light immunity	≤ 100,000 lx
Mechanical load	Shock: 30 g / 6 ms according to DIN EN 60068-2-27 (Ea), 6 axes Continuous shock: 25 g / 6 ms according to DIN EN 60068-2-27 (fatigue), 500 shocks, 6 axes

[1)] At a temperature of –40 °C, a warm-up time of typ. 20 minutes is required (when supply voltage V_S = 24 V).

Classifications

ECLASS 5.0	27270801
ECLASS 5.1.4	27270801
ECLASS 6.0	27270801
ECLASS 6.2	27270801
ECLASS 7.0	27270801
ECLASS 8.0	27270801
ECLASS 8.1	27270801
ECLASS 9.0	27270801
ECLASS 10.0	27270801
ECLASS 11.0	27270801
ECLASS 12.0	27270916
ETIM 5.0	EC001825
ETIM 6.0	EC001825
ETIM 7.0	EC001825
ETIM 8.0	EC001825
UNSPSC 16.0901	41111613

Dimensional drawing (Dimensions in mm (inch))

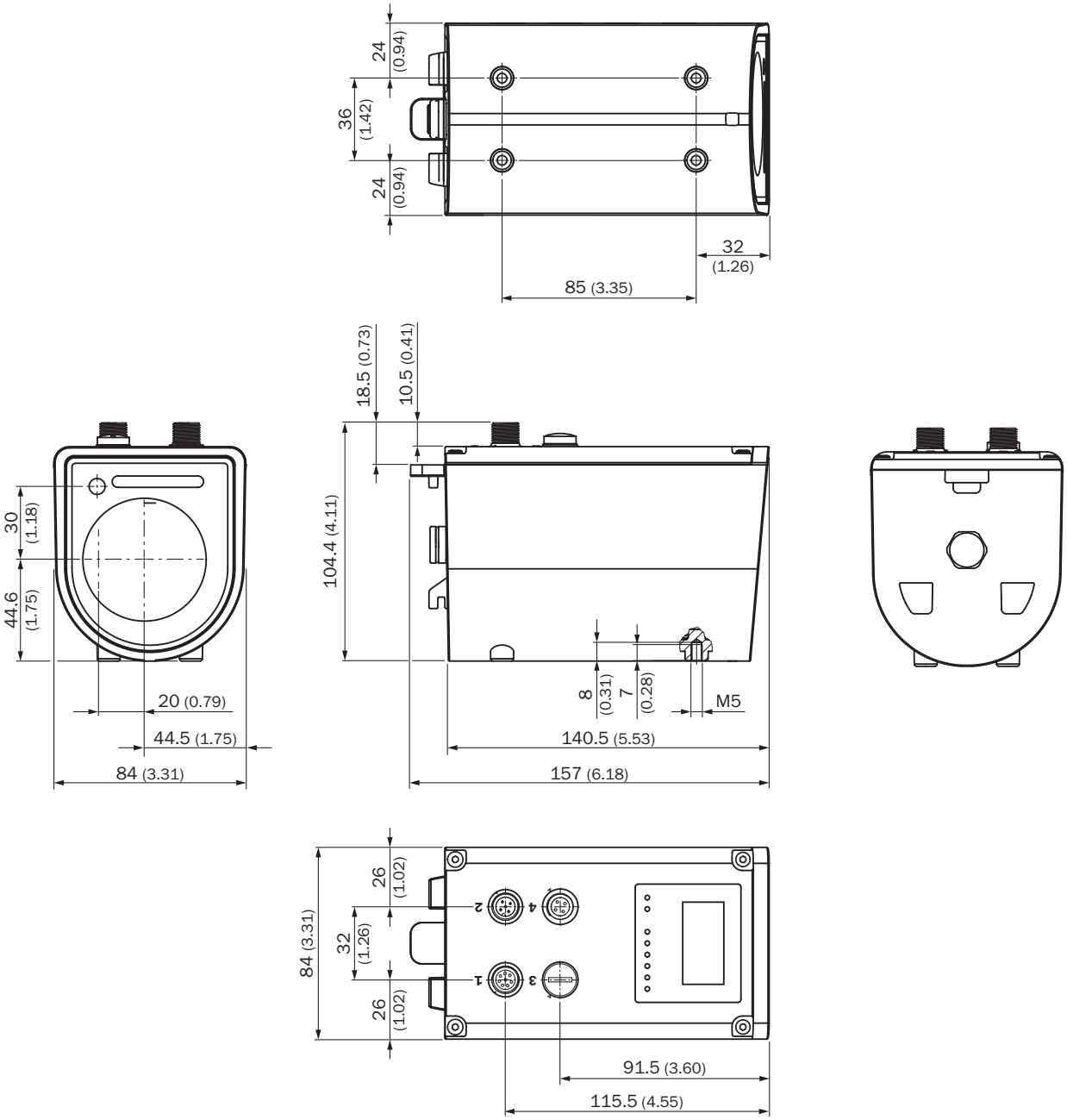

Working range diagram

DT1000 measuring range based on measurement cycle time and object remission

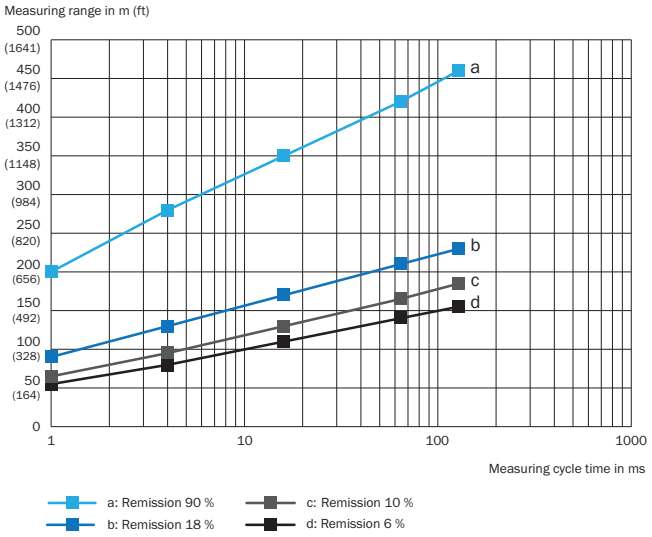

Connection type

Connection 2: Auxiliary

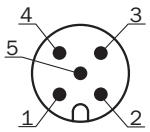

Connector M12, 5-pin, A-coded

① nc
② Q_3
③ nc
④ Q_4
⑤ In_2

PIN assignment

Connection 1: power, RS-422/SSI, Q1/In1, Q2/QA

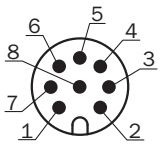

Connector M12, 8-pin, A-coded

① Q1/In1
② L+
③ RX-/CLK-
④ RX+/CLK+
⑤ TX-/Data-
⑥ TX+/Data+
⑦ M
⑧ Q2/QA

Connection 4: Ethernet

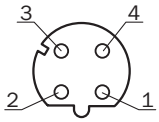

M12 female connector, 4-pin, D-coded
① TX+
② RX+
③ TX-
④ RX-

Light spot size

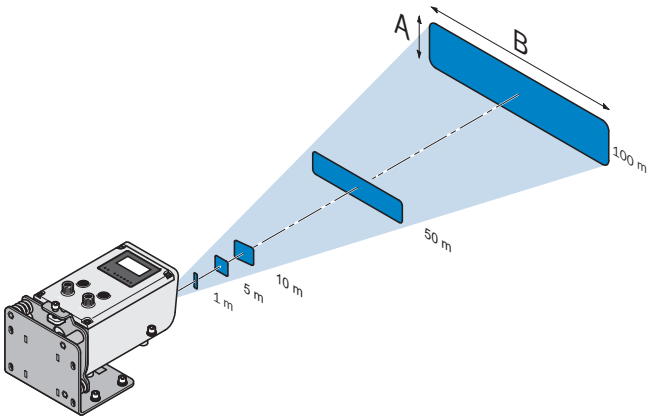

Functional principle

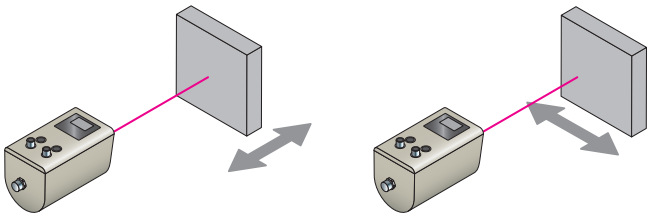

Repeatability

DT1000, with 64 ms measurement cycle time

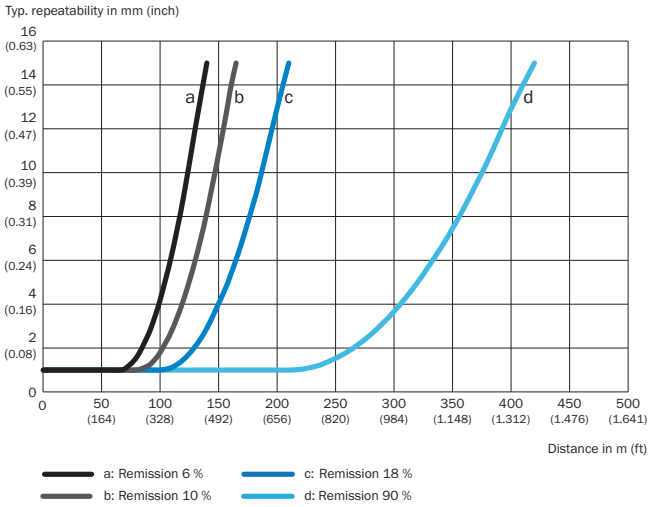

DT1000, with 128 ms measurement cycle time

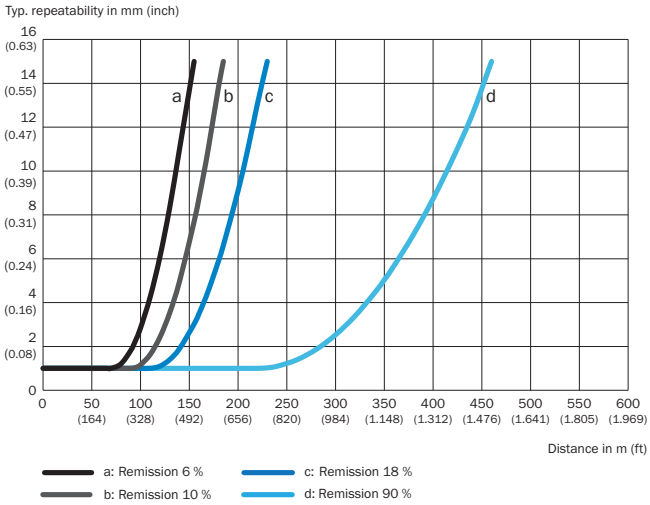

DT1000, with 16 ms measurement cycle time

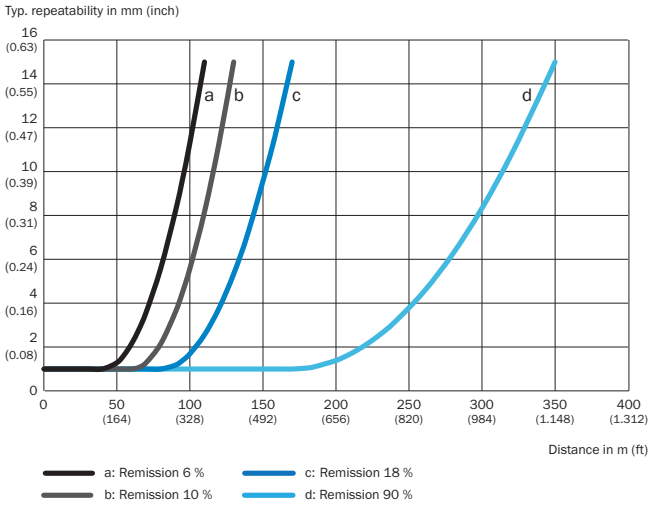

DT1000, with 4 ms measurement cycle time

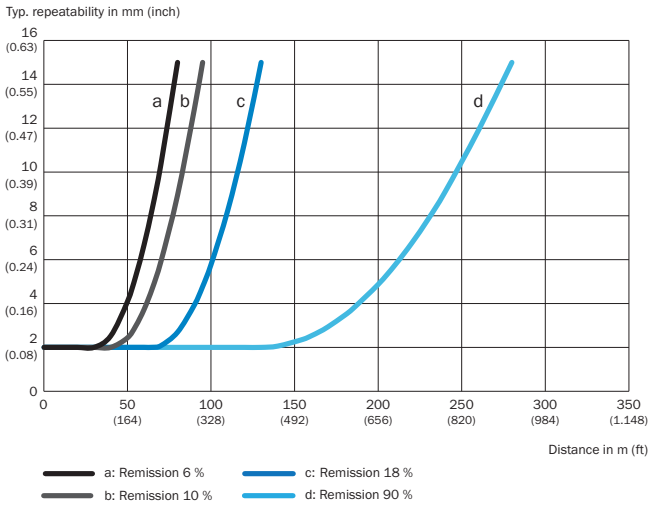

DT1000, with 1 ms measurement cycle time

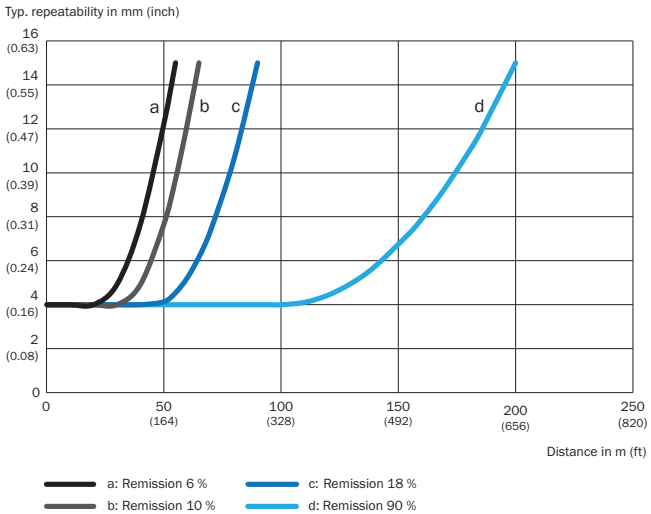

Measurement accuracy

Typically DT1000, x-axis: Distance, y-axis: Typical measurement accuracy

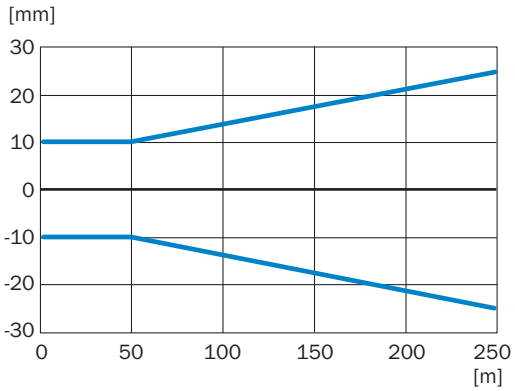

Recommended accessories

Other models and accessories ➜ www.sick.com/Dx1000

	Brief description	Type	Part no.
Device protection (mechanical)			
	Can be opened upward without tools. Conductor for connections on the back. Due to space constraints, connecting cables with 90° angled, pre-assembled male connectors/female connectors are required., Weatherproof housing (BEF-AH-DX1000, tube for weatherproof housing and rain cover for protective housing are not included with delivery)	Weather-proof housing	2087690
Terminal and alignment brackets			
	Alignment bracket for mounting and precise alignment of the sensor in a horizontal and vertical direction, stainless steel, mounting hardware included	BEF-AH-DX1000	2080392
Others			
	• **Connection type head A:** Female connector, M12, 8-pin, angled • **Connection type head B:** Flying leads • **Signal type:** RS-422, SSI • **Cable:** 10 m, 8-wire, PUR, halogen-free • **Description:** RS-422, SSI, shielded	YG2A68-100XXXXLECX	6051482

SICK AT A GLANCE

SICK is one of the leading manufacturers of intelligent sensors and sensor solutions for industrial applications. A unique range of products and services creates the perfect basis for controlling processes securely and efficiently, protecting individuals from accidents and preventing damage to the environment.

We have extensive experience in a wide range of industries and understand their processes and requirements. With intelligent sensors, we can deliver exactly what our customers need. In application centers in Europe, Asia and North America, system solutions are tested and optimized in accordance with customer specifications. All this makes us a reliable supplier and development partner.

Comprehensive services complete our offering: SICK LifeTime Services provide support throughout the machine life cycle and ensure safety and productivity.

For us, that is "Sensor Intelligence."

WORLDWIDE PRESENCE:

Contacts and other locations –www.sick.com

SICK
Sensor Intelligence.