Product data sheet

S10B-9011BA

S100

2D LIDAR SENSORS

SICK
Sensor Intelligence.

Ordering information

Type	Part no.
S10B-9011BA	1042266

The system plug has to be ordered separately. For details, see “Accessories”.

Other models and accessories → www.sick.com/S100

Detailed technical data

Features

Application	Indoor
Light source	Infrared (905 nm)
Laser class	1, complies with 21 CFR 1040.10 and 1040.11 except for the conformance according to “Laser Notice No. 50” from June 24, 2007 (IEC 60825-1:2014, EN 60825-1:2014)
Aperture angle	
Horizontal	270°
Scanning frequency	25 Hz
Angular resolution	0.5° 1°
Working range	0 m ... 10 m
Scanning range	
At 10% remission factor	4.5 m

Mechanics/electronics

Connection type	1 x system plug with screw terminal block (accessory)
Supply voltage	16.8 V DC ... 30 V DC
Power consumption	8 W
Output current	≤ 250 mA
Housing color	Black (RAL 9005)
Enclosure rating	IP65 (EN 60529, Section 14.2.5)
Protection class	II (VDE 0106, EN50178)
Weight	1.2 kg, without connecting cables
Dimensions (L x W x H)	105 mm x 102 mm x 152 mm
MTBF	> 100 years

Safety-related parameters

$MTTF_D$	> 100 years

Performance

Detectable object shape	Almost any (diameter: 30 mm, 40 mm, 50 mm, 70 mm, 150 mm (selectable))
Integrated application	Field evaluation
Number of field sets	1 field pair (2 fields)
Simultaneous evaluation cases	1 (2 fields)

Interfaces

Serial	✓, RS-232
CANopen	✓
Digital inputs	1 (standby)
Digital outputs	5 (Q1, Q2, Q̄1, Q̄2, diagnosis)
Optical indicators	1 7-segment display (contamination warning, initial condition)

Ambient data

Object remission	1.8 % ... > 1,000 % (reflectors)
Electromagnetic compatibility (EMC)	EN 61000-6-2:2005-08
Vibration resistance	IEC 60068-2-6:2007-12
Shock resistance	IEC 60068-2-29:1987
Ambient operating temperature	–10 °C ... +50 °C
Storage temperature	–30 °C ... +70 °C

General notes

Note on use	The sensor does not constitute a safety component as defined by relevant legislation on machine safety.

Classifications

ECLASS 5.0	27270990
ECLASS 5.1.4	27270990
ECLASS 6.0	27270913
ECLASS 6.2	27270913
ECLASS 7.0	27270913
ECLASS 8.0	27270913
ECLASS 8.1	27270913
ECLASS 9.0	27270913
ECLASS 10.0	27270913
ECLASS 11.0	27270913
ECLASS 12.0	27270913
ETIM 5.0	EC002550
ETIM 6.0	EC002550
ETIM 7.0	EC002550
ETIM 8.0	EC002550
UNSPSC 16.0901	41111615

Dimensional drawing (Dimensions in mm (inch))

Laser scanner

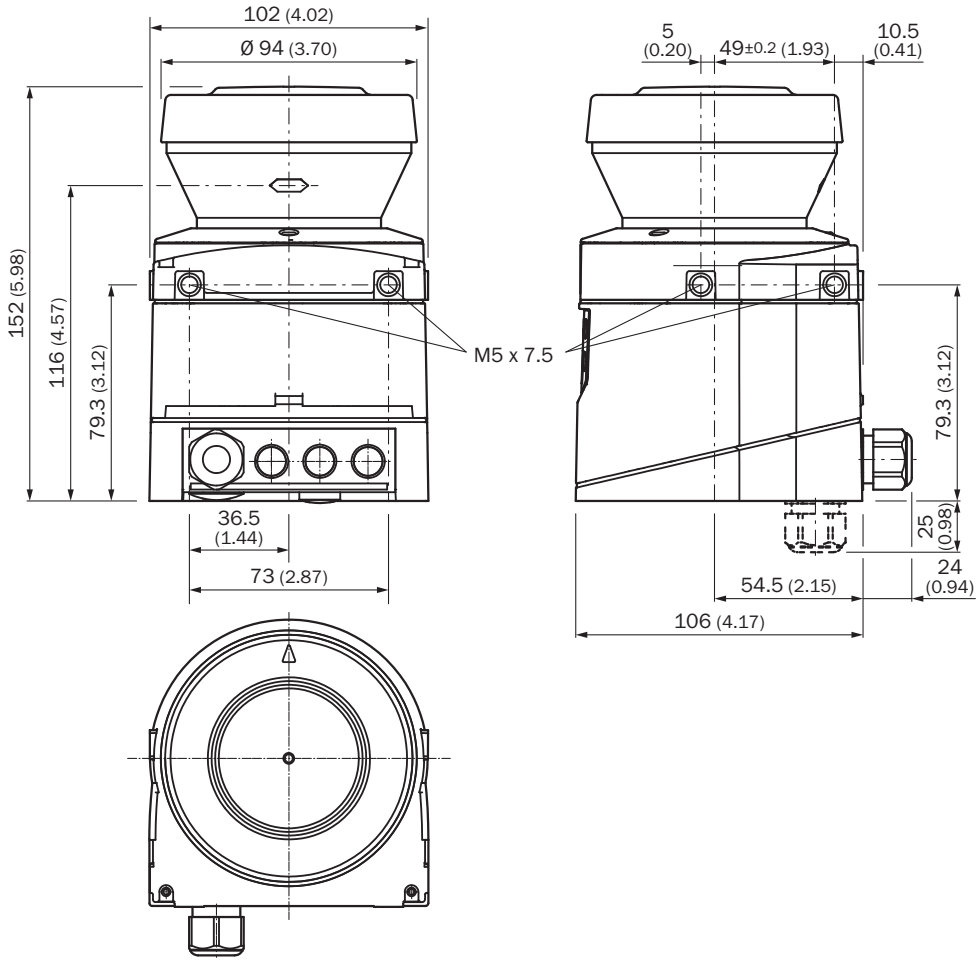

Scan plane origin

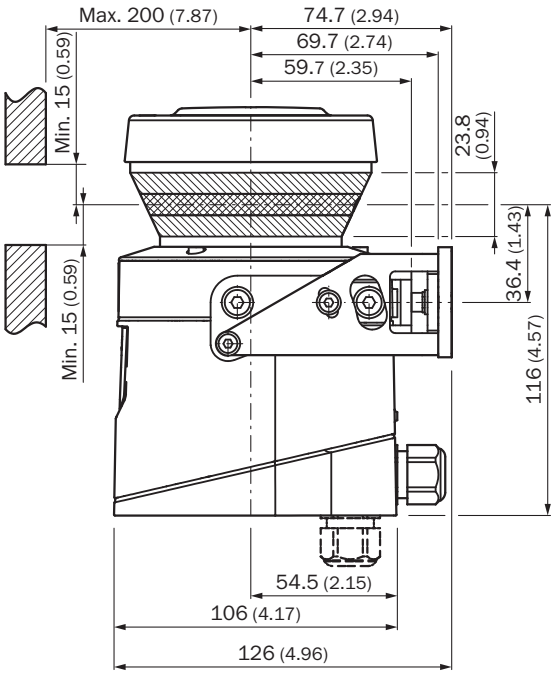

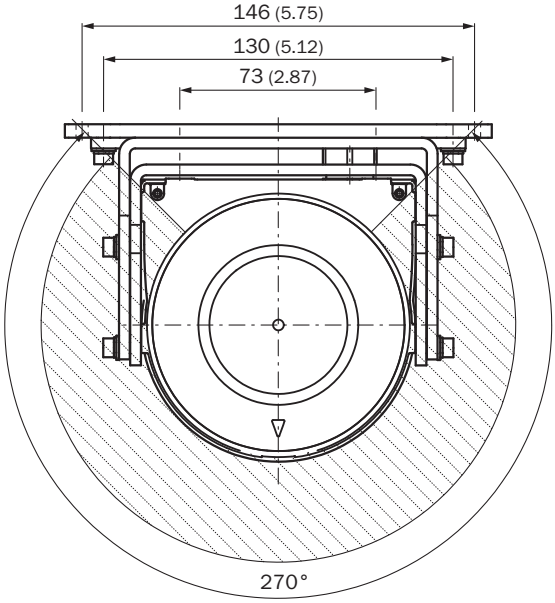

Working range diagram

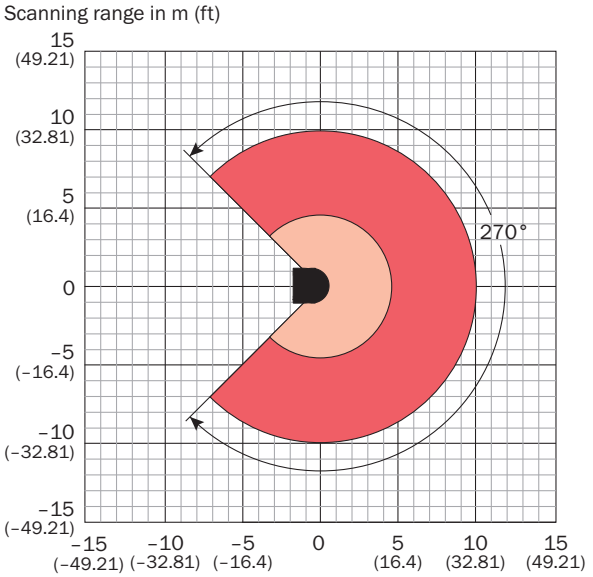

Scanning range max. 10 m (32.81 ft)

Scanning range for objects up to 10 % remission 4.5 m (14.76 ft)

Recommended accessories

Other models and accessories ➜ www.sick.com/S100

	Brief description	Type	Part no.
Mounting brackets and plates			
	1 piece, mounting bracket for rear mounting on wall or machine with protection of optics hood	Mounting kit 1b	2034325
	1 piece, mounting bracket, adjustable lateral axis, only in conjunction with mounting kit 1a (2034324) or 1b (2034325)	Mounting kit 2	2039302
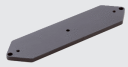	1 piece, mounting plate, adjustable longitudinal axis, only in conjunction with mounting kit 2 (2039302)	Mounting kit 3	2039303
Others			
	• **Connection type head A:** Male connector, M8, 4-pin, straight • **Connection type head B:** Male connector, USB-A, straight • **Cable:** 2 m, 4-wire, PVC • **Description:** Unshielded, Configuration cable with integrated RS-232 transducer on USB for connecting a sensor configuration connection (M8, 4-pin) to the USB interface of a PC	DSL-8U04G02M025KM1	6034574
	PS50W-24V	PS50W-24V	7028789
	• **Connection type head A:** System plug • **Cable:** 10 m, 11-wire, PVC • **Description:** Pre-assembled, Not for use of incremental encoders, integrated configuration storage, unshielded, For S300 standard • **Connection systems:** Flying leads • **Items supplied:** With 1 x cable gland M16, 1 x blanking plug M16, 2 x blanking plug M12	SX0B-B1110G	2032860

Recommended services

Additional services ➜ www.sick.com/S100

	Type	Part no.
Maintenance		
• **Product area:** 2D LiDAR sensors, 3D LiDAR sensors • **Range of services:** Inspection, analysis and restoring of defined functions, Inspection and adaptation of basic settings, parameters of field application, filters for raw data output, and product-specific configuration • **Duration:** Additional work will be invoiced separately • **Travel expenses:** The prices do not include travel costs such as hotel, flight, travel time and expenses.	Maintenance of LiDAR sensors	1682593
Commissioning		
• **Product area:** 2D LiDAR sensors, 3D LiDAR sensors • **Range of services:** Inspection of connection, fine adjustment, configuration of monitored areas, configuration and optimization of parameters as well as tests, Setup of previously defined functions of basic settings, parameters of field application, filters for raw data output and product-specific configuration • **Travel expenses:** The prices do not include travel costs such as hotel, flight, travel time and expenses. • **Duration:** Additional work will be invoiced separately	Commissioning LiDAR sensors	1680672

	Type	Part no.
Extended warranty		
• **Product area:** Identification solutions, machine vision, Detection and ranging solutions, safety camera sensors, Safety laser scanners, Safety radar sensors • **Range of services:** The services correspond to the scope of the statutory manufacturer warranty (SICK general terms of delivery). • **Duration:** Five-year warranty from delivery date.	Extended warranty for a total of five years from delivery date	1680671

SICK AT A GLANCE

SICK is one of the leading manufacturers of intelligent sensors and sensor solutions for industrial applications. A unique range of products and services creates the perfect basis for controlling processes securely and efficiently, protecting individuals from accidents and preventing damage to the environment.

We have extensive experience in a wide range of industries and understand their processes and requirements. With intelligent sensors, we can deliver exactly what our customers need. In application centers in Europe, Asia and North America, system solutions are tested and optimized in accordance with customer specifications. All this makes us a reliable supplier and development partner.

Comprehensive services complete our offering: SICK LifeTime Services provide support throughout the machine life cycle and ensure safety and productivity.

For us, that is "Sensor Intelligence."

WORLDWIDE PRESENCE:

Contacts and other locations –www.sick.com

SICK
Sensor Intelligence.