Product data sheet

WL150-P420

W150

MINIATURE PHOTOELECTRIC SENSORS

SICK
Sensor Intelligence.

Illustration may differ

Ordering information

Type	Part no.
WL150-P420	6020688

Included in delivery: BEF-W150-A (1), PL20A (1)

Other models and accessories → www.sick.com/W150

Detailed technical data

Features

Functional principle	Photoelectric retro-reflective sensor
Functional principle detail	Dual lens
Dimensions (W x H x D)	10 mm x 28 mm x 17.5 mm
Housing design (light emission)	Rectangular
Sensing range max.	0.01 m ... 0.7 m [1]
Sensing range	0.01 m ... 0.6 m [1]
Focus	Approx. 7.5°
Type of light	Visible red light
Light source	LED [2]
Angle of dispersion	Approx. 7.5°
Adjustment	Potentiometer, 270°
Special feature	Detecting transparent objects
Special applications	Detecting transparent objects

[1] Reflector PL80A.
[2] Average service life: 100,000 h at T_U = +25 °C.

Mechanics/electronics

Supply voltage U_B	10 V DC ... 30 V DC [1]
Ripple	± 10 % [2]

[1] Limit values.
[2] May not exceed or fall below U_V tolerances.
[3] Without load.
[4] Signal transit time with resistive load.
[5] With light/dark ratio 1:1.
[6] A = V_S connections reverse-polarity protected.
[7] B = inputs and output reverse-polarity protected.
[8] C = interference suppression.
[9] D = outputs overcurrent and short-circuit protected.

Current consumption	30 mA [3]
Switching output	PNP
Switching mode	Light/dark switching
Switching mode selector	Selectable via L/D control cable
Output current $I_{max.}$	≤ 100 mA
Response time	≤ 0.5 ms [4]
Switching frequency	1,000 Hz [5]
Attenuation along light beam	> 20 %
Connection type	Male connector M8, 4-pin
Circuit protection	A [6] B [7] C [8] D [9]
Protection class	II
Weight	7 g
Polarisation filter	✓
Housing material	Plastic, ABS
Optics material	Plastic, PC
Enclosure rating	IP67
Items supplied	BEF-W150-A mounting bracket, Reflector PL20A
Special feature	Detecting transparent objects
Ambient operating temperature	–25 °C ... +55 °C
Ambient temperature, storage	–40 °C ... +75 °C
UL File No.	NRNT2.E128350 & NRNT8.E128350

[1] Limit values.
[2] May not exceed or fall below U_V tolerances.
[3] Without load.
[4] Signal transit time with resistive load.
[5] With light/dark ratio 1:1.
[6] A = V_S connections reverse-polarity protected.
[7] B = inputs and output reverse-polarity protected.
[8] C = interference suppression.
[9] D = outputs overcurrent and short-circuit protected.

Classifications

ECLASS 5.0	27270902
ECLASS 5.1.4	27270902
ECLASS 6.0	27270902
ECLASS 6.2	27270902
ECLASS 7.0	27270902
ECLASS 8.0	27270902
ECLASS 8.1	27270902
ECLASS 9.0	27270902
ECLASS 10.0	27270902

ECLASS 11.0	27270902
ECLASS 12.0	27270902
ETIM 5.0	EC002717
ETIM 6.0	EC002717
ETIM 7.0	EC002717
ETIM 8.0	EC002717
UNSPSC 16.0901	39121528

Adjustments

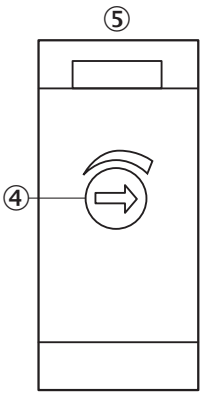

④ Sensitivity control 270°
⑤ LED indicator red:Light received>=switching threshold

Connection type

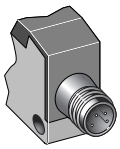

Connection diagram

Cd-087

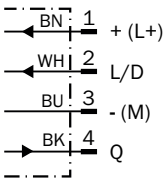

Characteristic curve

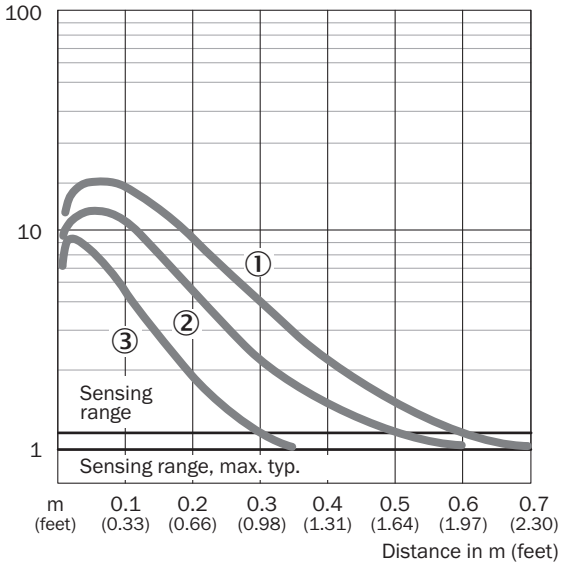

Sensing range diagram

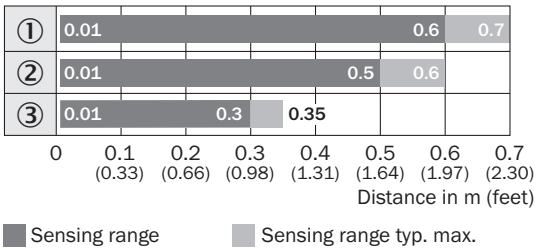

Reflector type

① PL80A
② PL250
③ PL20A

Dimensional drawing (Dimensions in mm (inch))

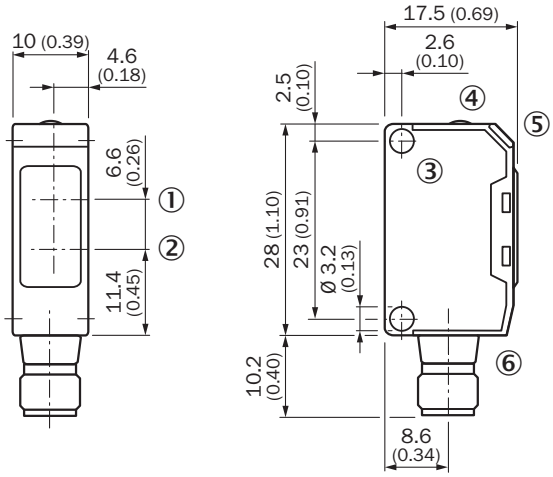

① Center of optical axis, receiver
② Center of optical axis, sender
③ Mounting hole, Ø 3.2 mm
④ Sensitivity control 270°
⑤ LED indicator red:Light received>=switching threshold
⑥ Connector M8, 4-pin or cable

Recommended accessories

Other models and accessories ➜ www.sick.com/W150

	Brief description	Type	Part no.
Mounting brackets and plates			
	Universal mounting bracket for reflectors, steel, zinc coated	BEF-WN-REFX	2064574
Reflectors			
	Rectangular, screw connection, 51 mm x 61 mm, PMMA/ABS, Screw-on, 2 hole mounting	P250	5304812
Others			
	• **Connection type head A:** Male connector, M8, 4-pin, straight • **Description:** Unshielded • **Connection systems:** Screw-type terminals • **Permitted cross-section:** 0.14 mm² ... 0.5 mm²	STE-0804-G	6037323
	• **Connection type head A:** Female connector, M8, 4-pin, straight, A-coded • **Connection type head B:** Flying leads • **Signal type:** Sensor/actuator cable • **Cable:** 5 m, 4-wire, PVC • **Description:** Sensor/actuator cable, unshielded • **Application:** Zones with chemicals	YF8U14-050VA3XLEAX	2095889

SICK AT A GLANCE

SICK is one of the leading manufacturers of intelligent sensors and sensor solutions for industrial applications. A unique range of products and services creates the perfect basis for controlling processes securely and efficiently, protecting individuals from accidents and preventing damage to the environment.

We have extensive experience in a wide range of industries and understand their processes and requirements. With intelligent sensors, we can deliver exactly what our customers need. In application centers in Europe, Asia and North America, system solutions are tested and optimized in accordance with customer specifications. All this makes us a reliable supplier and development partner.

Comprehensive services complete our offering: SICK LifeTime Services provide support throughout the machine life cycle and ensure safety and productivity.

For us, that is "Sensor Intelligence."

WORLDWIDE PRESENCE:

Contacts and other locations –www.sick.com

SICK
Sensor Intelligence.