Product data sheet

S30B-2011GB

S300

SAFETY LASER SCANNERS

SICK
Sensor Intelligence.

Illustration may differ

Ordering information

Sub product family	Model	Scanning angle	Protective field range	Number of fields	Type	Part no.
S300 Expert	Sensor without system plug	270°	2 m	48	S30B-2011GB	1050193

The system plug has to be ordered separately. For details, see “Accessories, plug connnectors and cables”.

Other models and accessories ➜ www.sick.com/S300

Detailed technical data

Features

Sub product family	S300 Expert
Model	Sensor without system plug
Application	Indoor
Protective field range	2 m
Warning field range	8 m (at 15 % reflectivity)
Distance measuring range	30 m
Type of field set	Triple field sets
Number of field sets	16
Number of fields	48
Number of monitoring cases	32 [1)]
Scanning angle	270°
Resolution (can be configured)	30 mm, 40 mm, 50 mm, 70 mm
Angular resolution	0.5°
Response time	80 ms [2)]
Protective field supplement	100 mm
Number of multiple samplings	2 ... 16, configurable
Delay of automatic reset	2 s ... 60 s, configurable

[1)] In combination with an additional static input via EFI or using the dynamic inputs on the device. Otherwise eight.
[2)] Depending on basic response time and multiple sampling.

Safety-related parameters

Type	Type 3 (IEC 61496)
Safety integrity level	SIL 2 (IEC 61508)

Category	Category 3 (EN ISO 13849)
Performance level	PL d (EN ISO 13849)
PFH_D (mean probability of a dangerous failure per hour)	8.0×10^{-8}
T_M (mission time)	20 years (EN ISO 13849)
Safe state in the event of a fault	At least one OSSD is in the OFF state.

Functions

Restart interlock	✓
External device monitoring (EDM)	✓
Multiple sampling	✓
Monitoring case switching	✓
Static protective field switching	✓
Dynamic protective field switching	✓
Contour as a reference	✓
Integrated configuration memory	✓
Measured data output	Expanded (CMS), via RS-422
Safe SICK device communication via EFI	✓

Interfaces

Connection type	System plug with or without connecting cable
Universal I/Os	5 [1]
Inputs	
External device monitoring (EDM)	1 [2]
Reset/restart	1 [2]
Static control inputs	3 [3]
Static control inputs with EFI	5 [4]
Dynamic control inputs (incremental encoder)	2 [5]
Standby	1
Outputs	
OSSD pairs	1
Application diagnostic outputs	3 [6]
Configuration method	PC with CDS (Configuration and Diagnostic Software)
Configuration and diagnostics interface	RS-232
Transmission rate	38.4 kBaud
Data interface	RS-422
Transmission rate	≤ 500 kBaud
Safe SICK device communication via EFI	

[1] Freely programmable, e.g., external device monitoring input, reset input, contamination warning, reset required.
[2] Availability depends on the configuration of the universal I/Os.
[3] 2+1; additional input is only available if reset and reset required are not being used.
[4] In combination with an EFI device (Flexi Soft or EFI gateway) five static control inputs are available. Otherwise three.
[5] Two of the static swichting signals can be used either as dynamic or as static switching signals.
[6] Freely programmable, e.g. warning field, contamination, reset required.

Transmission rate	≤ 500 kBaud
Length of cable	≤ 50 m
Conductor cross section	0.22 mm²

[1] Freely programmable, e.g., external device monitoring input, reset input, contamination warning, reset required.
[2] Availability depends on the configuration of the universal I/Os.
[3] 2+1; additional input is only available if reset and reset required are not being used.
[4] In combination with an EFI device (Flexi Soft or EFI gateway) five static control inputs are available. Otherwise three.
[5] Two of the static swichting signals can be used either as dynamic or as static switching signals.
[6] Freely programmable, e.g. warning field, contamination, reset required.

Electrical data

Protection class	II (EN 50178, EN 60950)
Supply voltage V_s	24 V DC (16.8 V DC ... 30 V DC)
Power consumption	≤ 0.33 A [1] ≤ 1.7 A [2]
Outputs	
Output signal switching devices (OSSDs)	2 x 250 mA
Application diagnostic outputs	3 x 100 mA [3]

[1] At 24 V DC without output load.
[2] At 24 V DC including maximum output load.
[3] Freely programmable, e.g. warning field, contamination, reset required.

Mechanical data

Dimensions (W x H x D)	102 mm x 152 mm x 106 mm
Weight	1.2 kg
Housing material	Aluminum die cast
Housing color	RAL 1021 (yellow)
Optics cover material	Polycarbonate
Optics cover surface finish	Outside with scratch-resistant coating

Ambient data

Enclosure rating	IP65 (EN 60529)
Ambient operating temperature	–10 °C ... +50 °C
Storage temperature	–25 °C ... +50 °C
Vibration resistance	IEC 60068-2-6, IEC 60068-2-64, IEC 60721-3-5, IEC TR 60721-4-5, IEC 61496-3
Class	5M1 (IEC 60721-3-5)
Shock resistance	IEC 60068-2-27, IEC 60721-3-5, IEC TR 60721-4-5, IEC 61496-3
Class	5M1 (IEC 60721-3-5)
Continuous shock	50 m/s², 11 ms 100 m/s², 16 ms

Other information

Type of light	Pulsed laser diode
Wave length	905 nm
Detectable remission factor	1.8 % ... > 1,000 %, reflectors
Laser class	1 (21 CFR 1040.10 and 1040.11, IEC 60825-1)

Classifications

ECLASS 5.0	27272705
ECLASS 5.1.4	27272705
ECLASS 6.0	27272705
ECLASS 6.2	27272705
ECLASS 7.0	27272705
ECLASS 8.0	27272705
ECLASS 8.1	27272705
ECLASS 9.0	27272705
ECLASS 10.0	27272705
ECLASS 11.0	27272705
ECLASS 12.0	27272705
ETIM 5.0	EC002550
ETIM 6.0	EC002550
ETIM 7.0	EC002550
ETIM 8.0	EC002550
UNSPSC 16.0901	39121528

Dimensional drawing (Dimensions in mm (inch))

Laser scanner

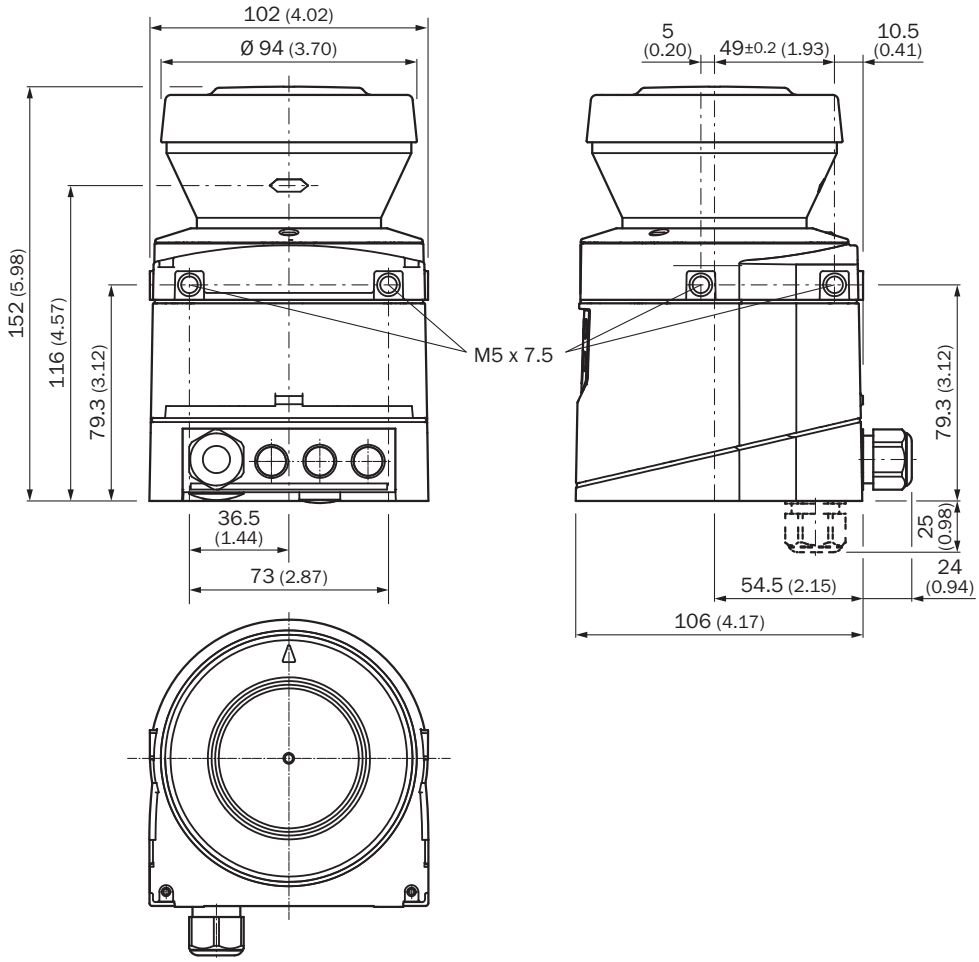

Scan plane origin

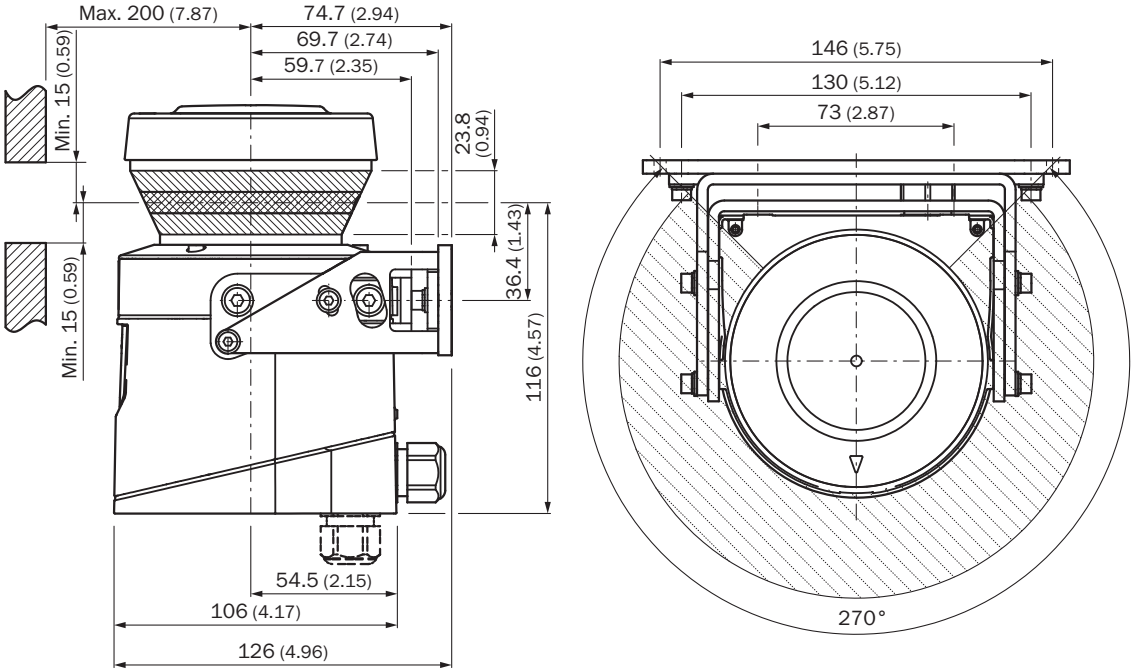

Connection diagram

S300 Expert with S300 Expert in host/guest connection with relays/contactors

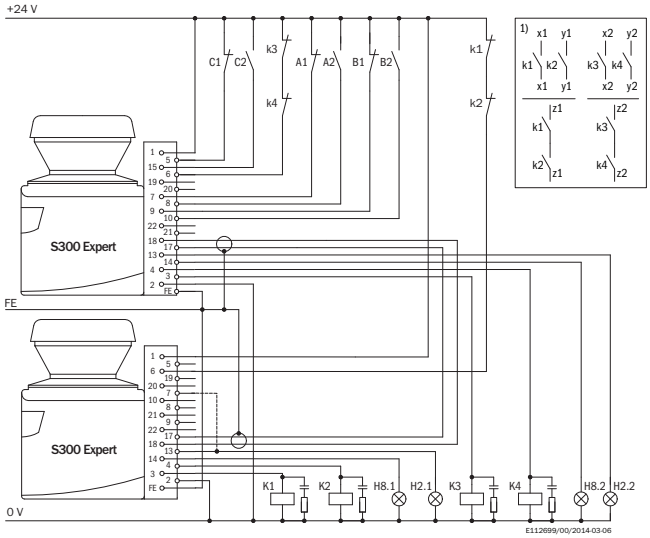

S300 Expert with S300 Expert in host/guest connection with relays/contactors
Operating mode: with external device monitoring and without restart interlock
Static protective field switching using the control inputs A, B and C
The protective fields affect the related OSSDs on host or guest

Comments

[1] Output circuits: These contacts are to be connected to the controller such that, with the output circuit open, the dangerous state is disabled. For categories 4 and 3, this integration must be dual-channel (x/y paths). Single-channel insertion in the control (z path) is only possible with a single-channel control and by taking the risk analysis into account.

Recommended accessories

Other models and accessories ➜ www.sick.com/S300

	Brief description	Type	Part no.
Mounting brackets and plates			
	1 piece, mounting bracket for rear mounting on wall or machine	Mounting kit 1a	2034324
	1 piece, mounting bracket for rear mounting on wall or machine with protection of optics hood	Mounting kit 1b	2034325
	1 piece, mounting bracket, adjustable lateral axis, only in conjunction with mounting kit 1a (2034324) or 1b (2034325)	Mounting kit 2	2039302
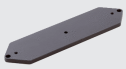	1 piece, mounting plate, adjustable longitudinal axis, only in conjunction with mounting kit 2 (2039302)	Mounting kit 3	2039303
Others			
	• **Connection type head A:** Male connector, M8, 4-pin, straight • **Connection type head B:** Male connector, USB-A, straight • **Cable:** 2 m, 4-wire, PVC • **Description:** Unshielded, Configuration cable with integrated RS-232 transducer on USB for connecting a sensor configuration connection (M8, 4-pin) to the USB interface of a PC	DSL-8U04G02M025KM1	6034574
	• **Connection type head A:** Male connector, M8, 4-pin, straight • **Connection type head B:** Male connector, USB-A, straight • **Cable:** 10 m, 4-wire, PVC • **Description:** Unshielded, Configuration cable with integrated RS-232 transducer on USB for connecting a sensor configuration connection (M8, 4-pin) to the USB interface of a PC	DSL-8U04G10M025KM1	6034575
	• **Connection type head A:** System plug • **Description:** Without cable, Not for use of incremental encoders, integrated configuration storage, For S300 Standard, Advanced, Expert and Professional • **Items supplied:** With 1 x cable gland M16, 1 x blanking plug M16, 2 x blanking plug M12	SX0B-A0000G	2032807
	• **Connection type head A:** Flying leads • **Connection type head B:** Flying leads • **Cable:** 15-wire, AWG20, PVC • **Description:** Unshielded • **Note:** On 100 m reel • **Items supplied:** By the meter	Connecting cable	6030795
	• **Connection type head A:** System plug • **Cable:** 5 m, 15-wire, PVC • **Description:** Pre-assembled, Not for use of incremental encoders, integrated configuration storage, unshielded, For S300 Advanced, Expert and Professional • **Connection systems:** Flying leads • **Items supplied:** With 1 x cable gland M16, 1 x blanking plug M16, 2 x blanking plug M12	SX0B-B1505G	2034264
	• **Connection type head A:** System plug • **Cable:** 10 m, 15-wire, PVC • **Description:** Pre-assembled, Not for use of incremental encoders, integrated configuration storage, unshielded, For S300 Advanced, Expert and Professional • **Connection systems:** Flying leads • **Items supplied:** With 1 x cable gland M16, 1 x blanking plug M16, 2 x blanking plug M12	SX0B-B1510G	2034265

	Brief description	Type	Part no.
	• **Connection type head A:** System plug • **Description:** Without cable, For use of incremental encoders, integrated configuration storage, For S300 Expert and Professional • **Items supplied:** With 1 x cable gland M16, 2 x cable gland M12, 1 x blanking plug M16, 6 x blanking plug M12	SX0B-A0000J	2032856
	• **Connection type head A:** System plug • **Cable:** 5 m, 11-wire, PVC • **Description:** Pre-assembled, For use of incremental encoders, integrated configuration storage, unshielded, For S300 Advanced, Expert and Professional • **Connection systems:** Flying leads • **Items supplied:** With 1 x cable gland M16, 2 x cable gland M12, 1 x blanking plug M16, 6 x blanking plug M12	SX0B-B1105J	2032857
	• **Connection type head A:** System plug • **Cable:** 10 m, 11-wire, PVC • **Description:** Pre-assembled, For use of incremental encoders, integrated configuration storage, unshielded, For S300 Advanced, Expert and Professional • **Connection systems:** Flying leads • **Items supplied:** With 1 x cable gland M16, 2 x cable gland M12, 1 x blanking plug M16, 6 x blanking plug M12	SX0B-B1110J	2032858
	• **Connection type head A:** Flying leads • **Connection type head B:** Flying leads • **Cable:** 2-wire, twisted pair, 120 Ohm, PVC • **Description:** Shielded • **Note:** Fitting for EFI connections • **Items supplied:** By the meter	EFI connecting cable	6029448

SICK AT A GLANCE

SICK is one of the leading manufacturers of intelligent sensors and sensor solutions for industrial applications. A unique range of products and services creates the perfect basis for controlling processes securely and efficiently, protecting individuals from accidents and preventing damage to the environment.

We have extensive experience in a wide range of industries and understand their processes and requirements. With intelligent sensors, we can deliver exactly what our customers need. In application centers in Europe, Asia and North America, system solutions are tested and optimized in accordance with customer specifications. All this makes us a reliable supplier and development partner.

Comprehensive services complete our offering: SICK LifeTime Services provide support throughout the machine life cycle and ensure safety and productivity.

For us, that is "Sensor Intelligence."

WORLDWIDE PRESENCE:

Contacts and other locations –www.sick.com

SICK
Sensor Intelligence.