Product data sheet

WSE2S-2F3130

W2

MINIATURE PHOTOELECTRIC SENSORS

SICK
Sensor Intelligence.

Illustration may differ

Ordering information

Type	Part no.
WSE2S-2F3130	1063523

Other models and accessories ➜ www.sick.com/W2

Detailed technical data

Features

Functional principle	Through-beam photoelectric sensor
Dimensions (W x H x D)	7.7 mm x 21.8 mm x 13.5 mm
Housing design (light emission)	Rectangular
Sensing range max.	0 m ... 2.5 m
Sensing range	0 m ... 2 m
Type of light	Visible red light
Light source	PinPoint LED [1]
Light spot size (distance)	Ø 65 mm (1,500 mm)
Wave length	640 nm
Adjustment	None

[1] Average service life: 100,000 h at T_U = +25 °C.

Mechanics/electronics

Supply voltage U_B	10 V DC ... 30 V DC [1]
Ripple	< 5 V_{pp} [2]

[1] Limit values.
[2] May not exceed or fall below U_V tolerances.
[3] Without load.
[4] Signal transit time with resistive load.
[5] With light/dark ratio 1:1.
[6] Do not bend below 0 °C.
[7] A = V_S connections reverse-polarity protected.
[8] B = output reverse-polarity protected.
[9] D = outputs overcurrent and short-circuit protected.

Current consumption	20 mA [3]
Switching output	PNP
Switching mode	Dark switching
Output current $I_{max.}$	≤ 50 mA
Response time	< 0.4 ms [4]
Switching frequency	1,200 Hz [5]
Connection type	Cable with connector M8, 3-pin, 200 mm [6]
Cable material	PVC
Conductor cross section	0.09 mm²
Cable diameter	Ø 3 mm
Circuit protection	A [7] B [8] D [9]
Housing material	Plastic, ABS/PC
Optics material	Plastic, PMMA
Enclosure rating	IP67
Ambient operating temperature	–25 °C ... +50 °C
Ambient temperature, storage	–40 °C ... +75 °C
UL File No.	NRKH.E181493
Part number of individual components	2071144 WS2S-2D3130 2071150 WSE2S-2

[1] Limit values.
[2] May not exceed or fall below U_V tolerances.
[3] Without load.
[4] Signal transit time with resistive load.
[5] With light/dark ratio 1:1.
[6] Do not bend below 0 °C.
[7] A = V_S connections reverse-polarity protected.
[8] B = output reverse-polarity protected.
[9] D = outputs overcurrent and short-circuit protected.

Safety-related parameters

$MTTF_D$	2,659 years
DC_{avg}	0 %

Classifications

ECLASS 5.0	27270901
ECLASS 5.1.4	27270901
ECLASS 6.0	27270901
ECLASS 6.2	27270901
ECLASS 7.0	27270901
ECLASS 8.0	27270901
ECLASS 8.1	27270901
ECLASS 9.0	27270901
ECLASS 10.0	27270901
ECLASS 11.0	27270901

ECLASS 12.0	27270901
ETIM 5.0	EC002716
ETIM 6.0	EC002716
ETIM 7.0	EC002716
ETIM 8.0	EC002716
UNSPSC 16.0901	39121528

Connection diagram

Cd-051

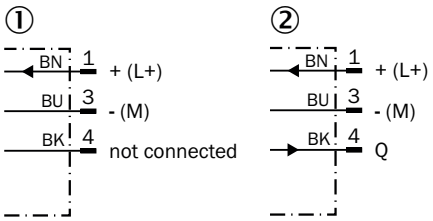

① Sender
② Receiver

Characteristic curve

WSE2S-2

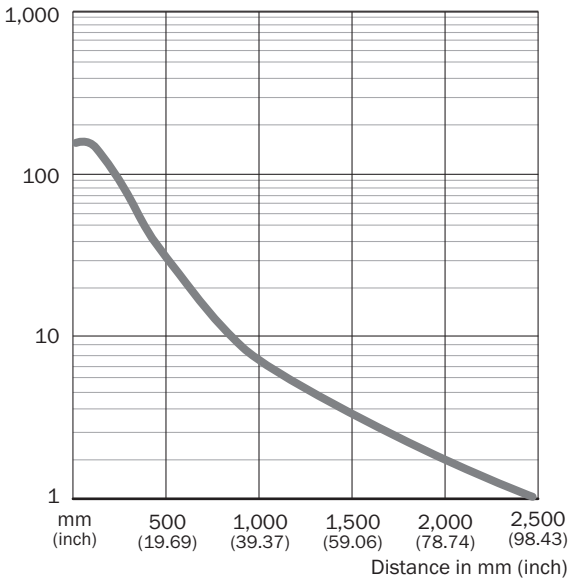

Light spot size

WSE2S-2

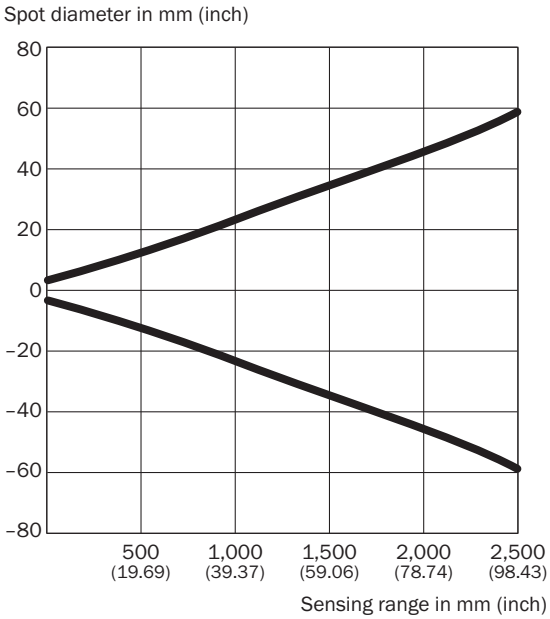

Dimensions in mm (inch)

Sensing range	Spot diameter
10 (0.39)	4.0 (0.16)
250 (9.84)	13.0 (0.51)
500 (19.69)	23.0 (0.91)
1,000 (39.37)	45.0 (1.77)
1,500 (59.06)	65.0 (2.56)
2,500 (98.43)	116.0 (4.57)

Sensing range diagram

WSE2S-2

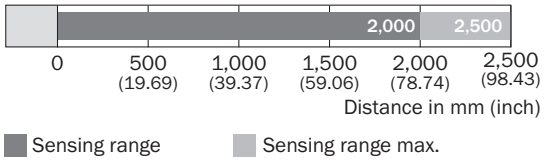

Sensing range Sensing range max.

Dimensional drawing (Dimensions in mm (inch))

WSE2S-2

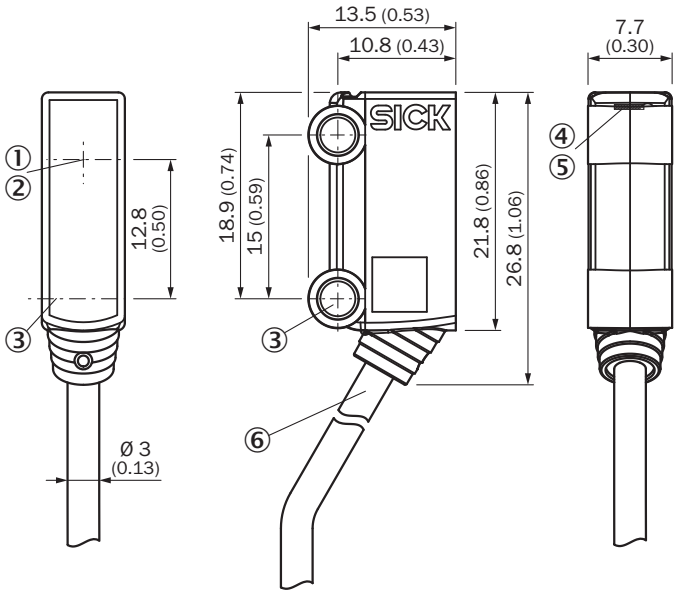

① Optical axis, receiver
② Optical axis, sender
③ Middle axis fixing hole Ø 3.2 mm
④ LED indicator green: power on
⑤ LED indicator yellow: Status of received light beam
⑥ Connection

Recommended accessories

Other models and accessories ➜ www.sick.com/W2

	Brief description	Type	Part no.
Others			
	• **Connection type head A:** Female connector, M8, 3-pin, straight, A-coded • **Connection type head B:** Flying leads • **Signal type:** Sensor/actuator cable • **Cable:** 5 m, 3-wire, PVC • **Description:** Sensor/actuator cable, unshielded • **Application:** Zones with chemicals	YF8U13-050VA1XLEAX	2095884
	• **Connection type head A:** Male connector, M8, 3-pin, straight • **Description:** Unshielded • **Connection systems:** Screw-type terminals • **Permitted cross-section:** 0.14 mm² ... 0.5 mm²	STE-0803-G	6037322

SICK AT A GLANCE

SICK is one of the leading manufacturers of intelligent sensors and sensor solutions for industrial applications. A unique range of products and services creates the perfect basis for controlling processes securely and efficiently, protecting individuals from accidents and preventing damage to the environment.

We have extensive experience in a wide range of industries and understand their processes and requirements. With intelligent sensors, we can deliver exactly what our customers need. In application centers in Europe, Asia and North America, system solutions are tested and optimized in accordance with customer specifications. All this makes us a reliable supplier and development partner.

Comprehensive services complete our offering: SICK LifeTime Services provide support throughout the machine life cycle and ensure safety and productivity.

For us, that is "Sensor Intelligence."

WORLDWIDE PRESENCE:

Contacts and other locations –www.sick.com

SICK
Sensor Intelligence.