Product data sheet

CLV630-1831S01

CLV63x

FIXED MOUNT BARCODE SCANNERS

SICK
Sensor Intelligence.

Ordering information

Type	Part no.
CLV630-1831S01	1056132

Other models and accessories → www.sick.com/CLV63x

Detailed technical data

Features

Version	Long Range
Connection type	Ethernet
Reading field	Front
Sensor type	Raster scanner
Optical focus	Fixed focus
Light source	Light spot, laser, Visible, Red, 655 nm
Light spot	Oval
Laser class	2 (IEC 60825-1:2014, EN 60825-1:2014)
Aperture angle	≤ 50°
Reading distance	60 mm ... 735 mm [1]
Scanning frequency	400 Hz ... 1,200 Hz
Code resolution	0.35 mm ... 1 mm
Raster height, number of lines, at distance	15 mm, 8, 200 mm

[1] For details see reading field diagram.

Mechanics/electronics

Connection type	2 x M12 cylindrical connectors (1 x 17-pin male connector, 4-pin female connector) on swivel connector
Supply voltage	18 V DC ... 30 V DC
Power consumption	5 W
Housing	Aluminum die cast
Housing color	Light blue (RAL 5012)
Window material	Plastic
Enclosure rating	IP65 (EN 60529)
Protection class	III (EN 61140)

[1] Swivel connector is 15 mm longer.
[2] At 25 °C.

Weight	250 g, without connecting cable
Dimensions (L x W x H)	61 mm x 96 mm x 38 mm [1]
MTBF	100,000 h
MTTF	40,000 h (Laser diode) [2]

[1] Swivel connector is 15 mm longer.
[2] At 25 °C.

Performance

Readable code structures	1D codes
Bar code types	All current code types, Code 39, Code 128, Code 93, Codabar, GS1-128 / EAN 128, UPC / GTIN / EAN, Interleaved 2 of 5, Pharmacode, GS1 DataBar, Telepen, MSI/Plessey
Code printing process	Inkjet (directly marked codes)
Print ratio	2:1 ... 3:1
No. of codes per scan	1 ... 20 (Standard decoder) 1 ... 6 (SMART decoder)
No. of codes per reading interval	1 ... 50 (auto-discriminating)
No. of characters per reading interval	5,000 500 (for multiplexer function in CAN operation)
No. of multiple readings	1 ... 99

Interfaces

Ethernet	✓, TCP/IP
Function	Data interface (read result output), Service interface
Data transmission rate	10/100 MBit/s
PROFINET	✓
Function	PROFINET Single Port, PROFINET Dual Port (optional via external connection module CDF600-2)
Data transmission rate	10/100 MBit/s
EtherNet/IP™	✓
Data transmission rate	10/100 MBit/s
EtherCAT	✓
Type of fieldbus integration	Optional over external fieldbus module CDF600
Serial	✓, RS-232, RS-422, RS-485
Function	Data interface (read result output), Service interface
Data transmission rate	2,400 Baud ... 115.2 kBaud, AUX: 57.6 kBaud (RS-232)
CAN	✓
Function	SICK CAN sensor network CSN (CAN controller/CAN device, multiplexer/server)
Data transmission rate	20 kbit/s ... 1 Mbit/s
CANopen	✓
Data transmission rate	20 kbit/s ... 1 Mbit/s
PROFIBUS DP	✓
Type of fieldbus integration	Optional over external fieldbus module CDF600-2
Digital inputs	4 (“Sensor 1”, “Sensor 2”, 2 inputs via optional parameter storage CMC600 in CDB620/CDM420)
Digital outputs	4 (“Result 1”, “Result 2”, 2 outputs via optional parameter storage CMC600 in CDB620/CDM420)

Reading pulse	Digital inputs, non-powered, serial interface, auto pulse, CAN
Optical indicators	6 LEDs (Ready, Result, laser, Data, CAN, LNK TX, Bar graph for displaying the reading rate percentage (10 LEDs))
Acoustic indicators	Beeper/buzzer (can be switched off, can be allocated as a result indication function)
Control elements	2 buttons (choose and start/stop functions)
Configuration software	SOPAS ET
Memory card	MicroSD memory card (flash card), optional

Ambient data

Electromagnetic compatibility (EMC)	EN 61000-6-3 (2001-10) / EN 61000-6-2:2005
Vibration resistance	EN 60068-2-6 (1995)
Shock resistance	EN 60068-2-27 (1993)
Ambient operating temperature	0 °C ... +40 °C
Storage temperature	–20 °C ... +70 °C
Permissible relative humidity	90 %, Non-condensing
Ambient light immunity	2,000 lx, on barcode
Bar code print contrast (PCS)	≥ 60 %

Classifications

ECLASS 5.0	27280102
ECLASS 5.1.4	27280102
ECLASS 6.0	27280102
ECLASS 6.2	27280102
ECLASS 7.0	27280102
ECLASS 8.0	27280102
ECLASS 8.1	27280102
ECLASS 9.0	27280102
ECLASS 10.0	27280102
ECLASS 11.0	27280102
ECLASS 12.0	27280102
ETIM 5.0	EC002550
ETIM 6.0	EC002550
ETIM 7.0	EC002550
ETIM 8.0	EC002550
UNSPSC 16.0901	43211701

Dimensional drawing (Dimensions in mm (inch))

CLV63x/64x/65x, JEF3xx, JEF5xx, Ethernet, front

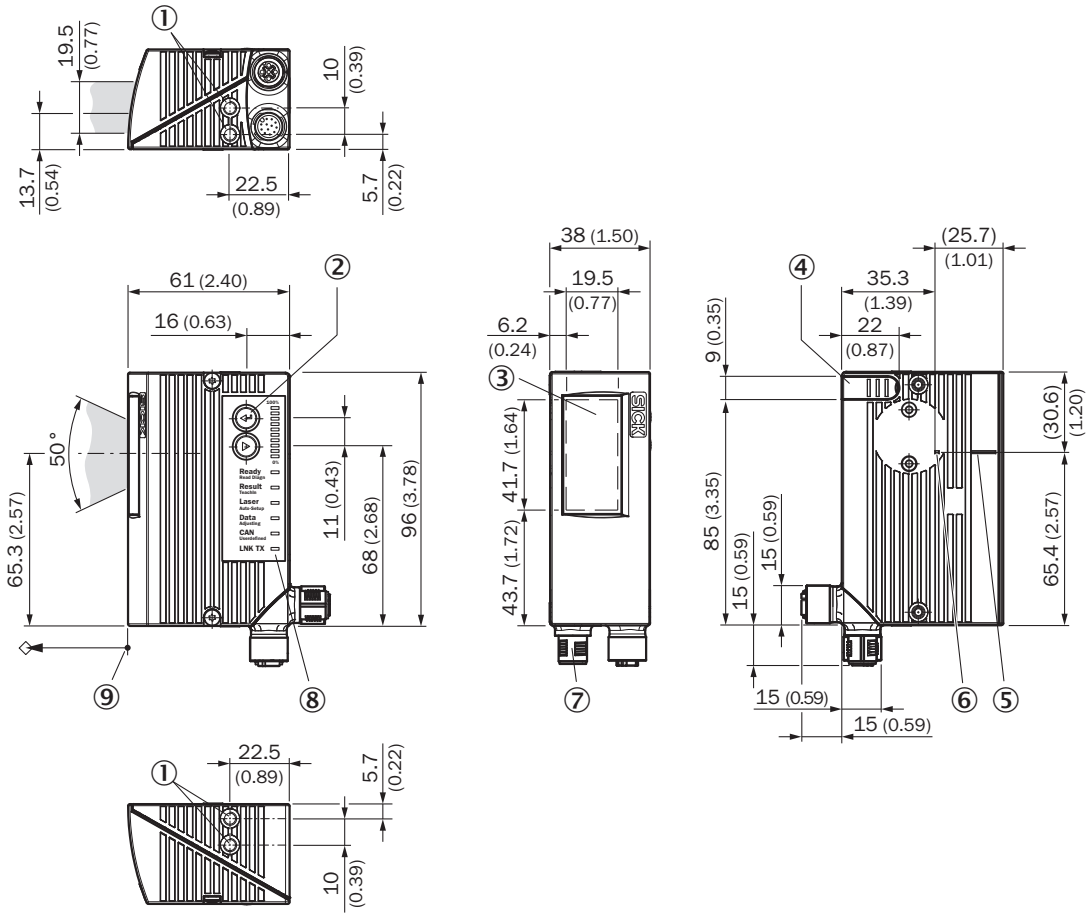

① Blind hole thread M5, 5 mm deep (2 x), for mounting
② Function button (2 x)
③ Reading field
④ Cover for the microSD memory card
⑤ Central position of the deflected laser beam in the V-shaped aperture angle
⑥ Internal impact point: rotation point of the variable direction laser beam
⑦ M12 round connectors (1 x 12-pin or 1 x 17-pin male connector, A-coded, 1 x 4-pin female connector, D-coded) with swivel connector
⑧ LED status indicator (6x) and bar graph
⑨ Reference point for reading distance (from housing edge to object)

Reading field diagram

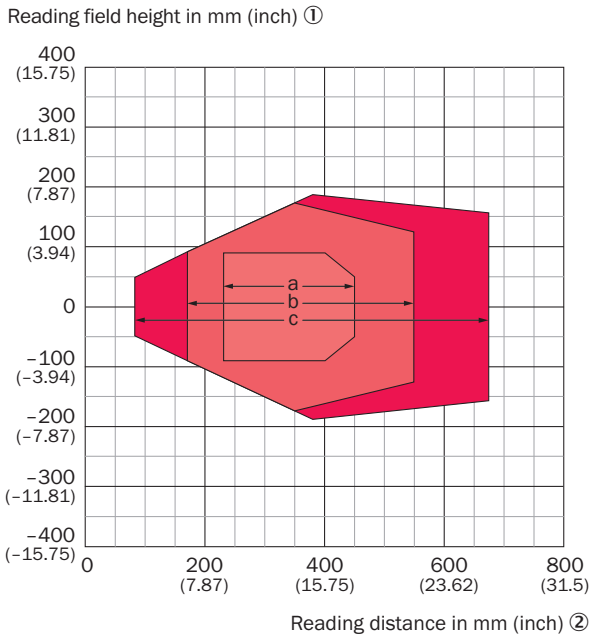

Resolution ③

a: 0.35 mm (13.8 mil)
b: 0.50 mm (19.7 mil)
c: 1.0 mm (39.4 mil)

Recommended accessories

Other models and accessories → www.sick.com/CLV63x

	Brief description	Type	Part no.
Cloning modules			
	External parameter memory for integration in CDB620/CDB650/CDM42x	CMC600-101	1042259
Storage media			
	microSD memory card with 1 GB for industrial use	microSD memory card	4051366

Recommended services

Additional services ➜ www.sick.com/CLV63x

	Type	Part no.
Performance check		
• **Product area:** Fixed mount barcode scanners • **Range of services:** Inspection of defined functions, e.g., reading performance • **Travel expenses:** The prices do not include travel costs such as hotel, flight, travel time and expenses. • **Duration:** Additional work will be invoiced separately	Performance check CLV4xx/CLV6xx	1682028
Commissioning		
• **Product area:** Fixed mount barcode scanners • **Range of services:** Inspection of connection, fine adjustment, optimization of parameters of SICK product as well as tests, Setup of previously defined functions of reading configuration, code configuration, data processing and network, interfaces or inputs and outputs • **Travel expenses:** The prices do not include travel costs such as hotel, flight, travel time and expenses. • **Duration:** Additional work will be invoiced separately	Commissioning CLV61x ... CLV64x	1681925
Extended warranty		
• **Product area:** Identification solutions, machine vision, Detection and ranging solutions, safety camera sensors, Safety laser scanners, Safety radar sensors • **Range of services:** The services correspond to the scope of the statutory manufacturer warranty (SICK general terms of delivery). • **Duration:** Five-year warranty from delivery date.	Extended warranty for a total of five years from delivery date	1680671

SICK AT A GLANCE

SICK is one of the leading manufacturers of intelligent sensors and sensor solutions for industrial applications. A unique range of products and services creates the perfect basis for controlling processes securely and efficiently, protecting individuals from accidents and preventing damage to the environment.

We have extensive experience in a wide range of industries and understand their processes and requirements. With intelligent sensors, we can deliver exactly what our customers need. In application centers in Europe, Asia and North America, system solutions are tested and optimized in accordance with customer specifications. All this makes us a reliable supplier and development partner.

Comprehensive services complete our offering: SICK LifeTime Services provide support throughout the machine life cycle and ensure safety and productivity.

For us, that is "Sensor Intelligence."

WORLDWIDE PRESENCE:

Contacts and other locations –www.sick.com

SICK
Sensor Intelligence.