Product data sheet

WL11-2P2430

W11-2

SMALL PHOTOELECTRIC SENSORS

SICK
Sensor Intelligence.

Illustration may differ

Ordering information

Type	Part no.
WL11-2P2430	1041385

Other models and accessories ➜ www.sick.com/W11-2

Detailed technical data

Features

Functional principle	Photoelectric retro-reflective sensor
Functional principle detail	Dual lens
Dimensions (W x H x D)	15.6 mm x 48.5 mm x 42 mm
Housing design (light emission)	Rectangular
Sensing range max.	0.15 m ... 10 m [1]
Sensing range	0.15 m ... 8 m [1]
Focus	Approx. 2.2°
Type of light	Visible red light
Light source	LED [2]
Light spot size (distance)	Ø 50 mm (3 m)
Angle of dispersion	Approx. 2.2°
Wave length	640 nm
Adjustment	None

[1] Reflector PL80A.
[2] Average service life: 100,000 h at T_U = +25 °C.

Mechanics/electronics

Supply voltage U_B	10 V DC ... 30 V DC [1]
Ripple	< 5 V_{pp} [2]
Current consumption	30 mA [3]
Switching output	PNP
Output function	Complementary
Switching mode	Light/dark switching
Signal voltage PNP HIGH/LOW	Uv - 2.5 V / approx. 0 V
Output current $I_{max.}$	≤ 100 mA
Response time	≤ 2.5 ms [4]
Switching frequency	200 Hz [5]
Connection type	Male connector M12, 4-pin
Circuit protection	A [6] C [7] D [8]
Protection class	II [9]
Weight	120 g
Polarisation filter	✓
Housing material	Plastic, ABS
Optics material	Plastic, PMMA
Enclosure rating	IP66 IP67 IP69K
Ambient operating temperature	–30 °C ... +60 °C
Ambient temperature, storage	–40 °C ... +75 °C
UL File No.	NRKH.E181493 & NRKH7.E181493

[1] Limit values when operated in short-circuit protected network: max. 8 A.
[2] May not exceed or fall below U_V tolerances.
[3] Without load.
[4] Signal transit time with resistive load.
[5] With light/dark ratio 1:1.
[6] A = V_S connections reverse-polarity protected.
[7] C = interference suppression.
[8] D = outputs overcurrent and short-circuit protected.
[9] Reference voltage DC 50 V.

Safety-related parameters

$MTTF_D$	3,092 years
DC_{avg}	0 %

Classifications

ECLASS 5.0	27270902
ECLASS 5.1.4	27270902
ECLASS 6.0	27270902
ECLASS 6.2	27270902

ECLASS 7.0	27270902
ECLASS 8.0	27270902
ECLASS 8.1	27270902
ECLASS 9.0	27270902
ECLASS 10.0	27270902
ECLASS 11.0	27270902
ECLASS 12.0	27270902
ETIM 5.0	EC002717
ETIM 6.0	EC002717
ETIM 7.0	EC002717
ETIM 8.0	EC002717
UNSPSC 16.0901	39121528

Dimensional drawing (Dimensions in mm (inch))

WL11-2

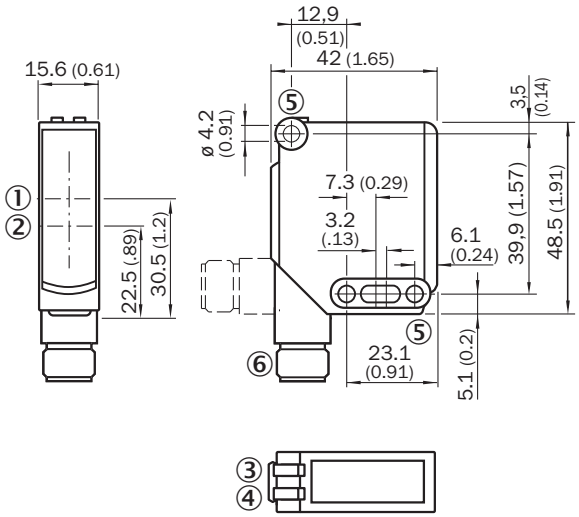

① Optical axis, sender
② Optical axis, receiver
③ LED indicator green: Supply voltage active
④ LED indicator yellow: Status of received light beam
⑤ Mounting hole ø 4.2 mm
⑥ M12 connector, 4-pin or cable

Adjustments

WL11-2

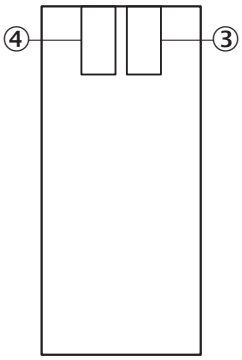

③ LED indicator green: Supply voltage active
④ LED indicator yellow: Status of received light beam

Connection type

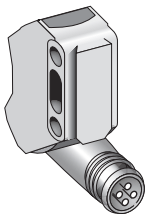

Connection diagram

Cd-083

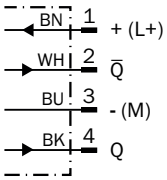

Characteristic curve

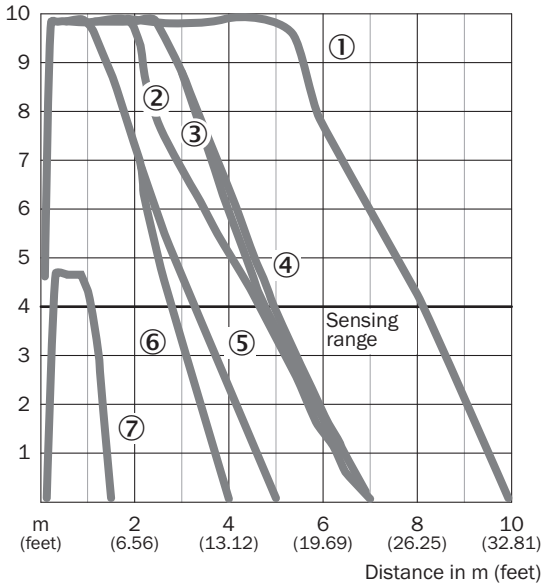

① Reflector PL80A
② Reflector C110A
③ Reflector PL50A
④ Reflector PL40A
⑤ Reflector PL30A
⑥ Reflector PL20A
⑦ Reflective tape Diamond Grade

Sensing range diagram

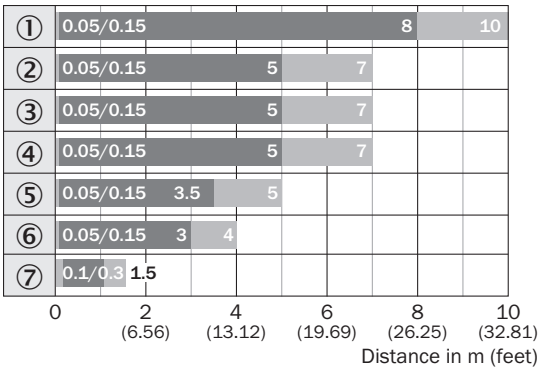

Sensing range Sensing range typ. max.

① Reflector PL80A
② Reflector C110A
③ Reflector PL50A
④ Reflector PL40A
⑤ Reflector PL30A
⑥ Reflector PL20A
⑦ Reflective tape Diamond Grade

Recommended accessories

Other models and accessories ➜ www.sick.com/W11-2

	Brief description	Type	Part no.
Mounting brackets and plates			
	Mounting bracket, large, stainless steel, mounting hardware included	BEF-WG-W12	2013942
	Universal mounting bracket for reflectors, steel, zinc coated	BEF-WN-REFX	2064574
Plug connectors and cables			
	• **Connection type head A:** Male connector, M12, 4-pin, straight • **Description:** Unshielded • **Connection systems:** Screw-type terminals • **Permitted cross-section:** ≤ 0.75 mm²	STE-1204-G	6009932
Reflectors			
	Rectangular, screw connection, 40 mm x 60 mm, PMMA/ABS, Screw-on, 2 hole mounting	PL40A	1012720
Others			
	• **Connection type head A:** Female connector, M12, 4-pin, straight, A-coded • **Connection type head B:** Flying leads • **Signal type:** Sensor/actuator cable • **Cable:** 5 m, 4-wire, PVC • **Description:** Sensor/actuator cable, unshielded • **Application:** Zones with chemicals	YF2A14-050VB3XLEAX	2096235

SICK AT A GLANCE

SICK is one of the leading manufacturers of intelligent sensors and sensor solutions for industrial applications. A unique range of products and services creates the perfect basis for controlling processes securely and efficiently, protecting individuals from accidents and preventing damage to the environment.

We have extensive experience in a wide range of industries and understand their processes and requirements. With intelligent sensors, we can deliver exactly what our customers need. In application centers in Europe, Asia and North America, system solutions are tested and optimized in accordance with customer specifications. All this makes us a reliable supplier and development partner.

Comprehensive services complete our offering: SICK LifeTime Services provide support throughout the machine life cycle and ensure safety and productivity.

For us, that is "Sensor Intelligence."

WORLDWIDE PRESENCE:

Contacts and other locations –www.sick.com

SICK
Sensor Intelligence.