Product data sheet

LMS511-20100 PRO

LMS5xx

2D LIDAR SENSORS

SICK
Sensor Intelligence.

Ordering information

Type	Part no.
LMS511-20100 PRO	1047782

Other models and accessories ➜ www.sick.com/LMS5xx

Detailed technical data

Features

Variant	PRO
Application	Outdoor
Resolution power	High Resolution
Light source	Infrared (905 nm, ± 10 nm)
Laser class	1 (EN/IEC 60825-1:2014 (Ed.3), EN/IEC 60825-1:2007 (Ed.2) CAN/CSA-E60825-1:2015-11 (Ed.3))
Aperture angle	
Horizontal	190°
Scanning frequency	25 Hz 35 Hz 50 Hz 75 Hz 100 Hz
Angular resolution	0.042°, interlaced 0.083°, interlaced 0.1667° 0.25° 0.333° 0.5° 0.667° 1°
Scan field flatness	Scan field flatness combined: ± 0.72° Typical conical error: 1 sigma value - 0.11° ± 0.1° Typical tilt: 1 sigma value + 0.15° ± 0.08°
Heating	Self-heating with additional integrated heating
Working range	0.2 m ... 80 m
Scanning range	
At 10% remission factor	26 m
Measurement accuracy	± 12 mm
Spot size	Divergence: 4.7 mrad At the viewing window: 13.5 mm

	In 26 m: 136 mm In 40 m: 202 mm
Amount of evaluated echoes	5

Mechanics/electronics

Connection type	4 x M12 round connector
Supply voltage	24 V DC, ± 20 %
Power consumption	22 W, + 55 W heating (typical)
Housing	AlSi12
Housing color	Gray (RAL 7032)
Window material	Polycarbonate, scratch-resistant coating
Enclosure rating	IP65 (EN 60529, Section 14.2.7) IP67 (EN 60529, Section 14.2.7)
Protection class	III (IEC 61140:2016-11)
Weight	3.7 kg
Dimensions (L x W x H)	160 mm x 155 mm x 185 mm
MTBF	> 100 years

Safety-related parameters

$MTTF_D$	> 100 years

Performance

Response time	≥ 10 ms
Detectable object shape	Almost any
Systematic error	± 25 mm (1 m ... 10 m) ± 35 mm (10 m ... 20 m) [1]
Statistical error	7 mm (1 m ... 10 m) 9 mm (10 m ... 20 m) [1]
Integrated application	Field evaluation with flexible fields Data output
Number of field sets	10 fields
Simultaneous evaluation cases	10
Filter	Echo filter Fog filter Particle filter Average filter Glare filter

[1] Typical value; actual value depends on environmental conditions.

Interfaces

Ethernet	✓, TCP/IP, UDP/IP
Function	Host and AUX, NTP
Data transmission rate	10/100 MBit/s
Serial	✓, RS-232, RS-422
Function	Host and AUX
Data transmission rate	9.6 kBaud ... 500 kBaud
CAN	✓
Function	Extension of outputs

Data transmission rate	20 kBit/s, 500 kBit/s, 1 MBit/s, Synchronization
USB	✓
Remark	Mini-USB
Function	Service interface
Digital inputs	4 (Digital, encoder (HTL), synchronization)
Digital outputs	6 (digital)
Optical indicators	5 LEDs (Additional 7-segment display)

Ambient data

Object remission	2 % ... > 1,000 % (reflectors)
Electromagnetic compatibility (EMC)	
Emitted radiation	Industrial environment (IEC 61000-6-3:2020 / EN IEC 61000-6-3:2007+A1:2011)
Electromagnetic immunity	Industrial environment (IEC 61000-6-2:2016 / EN IEC 61000-6-2:2019)
Vibration resistance	
Sine test	10 Hz ... 150 Hz, Amplitude 0.35 mm to 5 g, 20 cycles [1]
Shock resistance	15 g, 11 ms, 6 single shocks/axis [2] 10 g, 16 ms, 1,000 continuous shocks/axis [2]
Impact resistance	IK05, IK06, IK07 (DIN EN 50102:09-1997)
Ambient operating temperature	–30 °C ... +50 °C
Storage temperature	–40 °C ... +70 °C
Ambient light immunity	70,000 lx

[1] IEC 60068-2-6:2007-12.
[2] IEC 60068-2-27:2008-02.

General notes

Note on use	The sensor does not constitute a safety component as defined by relevant legislation on machine safety.

Classifications

ECLASS 5.0	27270990
ECLASS 5.1.4	27270990
ECLASS 6.0	27270913
ECLASS 6.2	27270913
ECLASS 7.0	27270913
ECLASS 8.0	27270913
ECLASS 8.1	27270913
ECLASS 9.0	27270913
ECLASS 10.0	27270913
ECLASS 11.0	27270913
ECLASS 12.0	27270913
ETIM 5.0	EC002550
ETIM 6.0	EC002550
ETIM 7.0	EC002550
ETIM 8.0	EC002550

UNSPSC 16.0901	41111615

Working range diagram

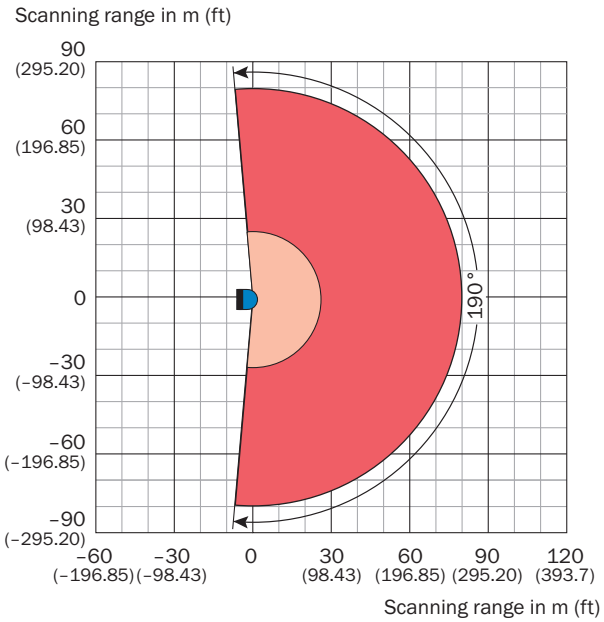

Assembly note

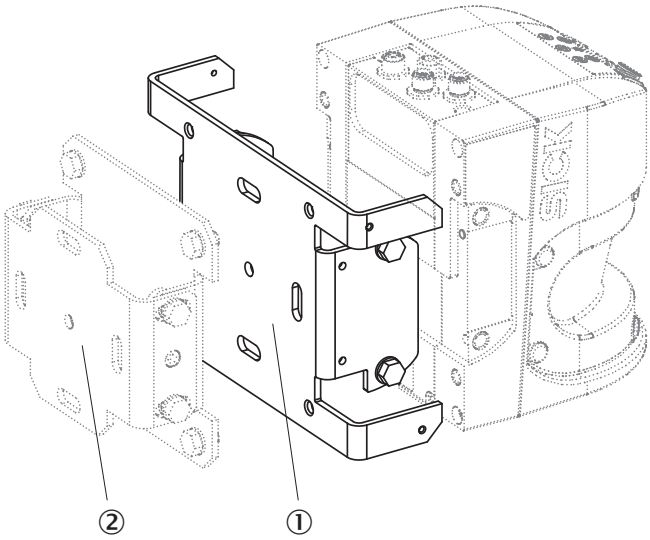

① Mounting bracket 2059271
② Mounting bracket 2018303

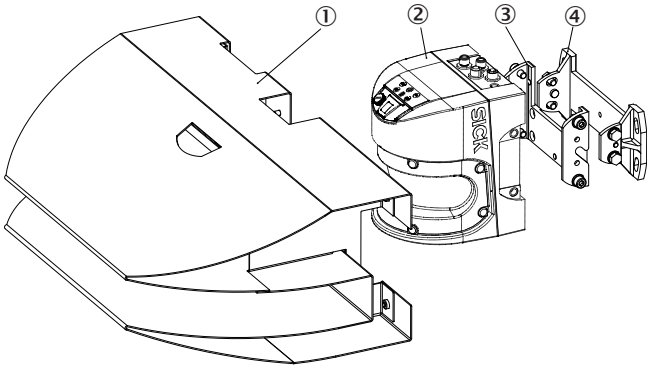

① Weather hood
② LMS5xx
③ Mounting kit 1
④ Mounting kit 2

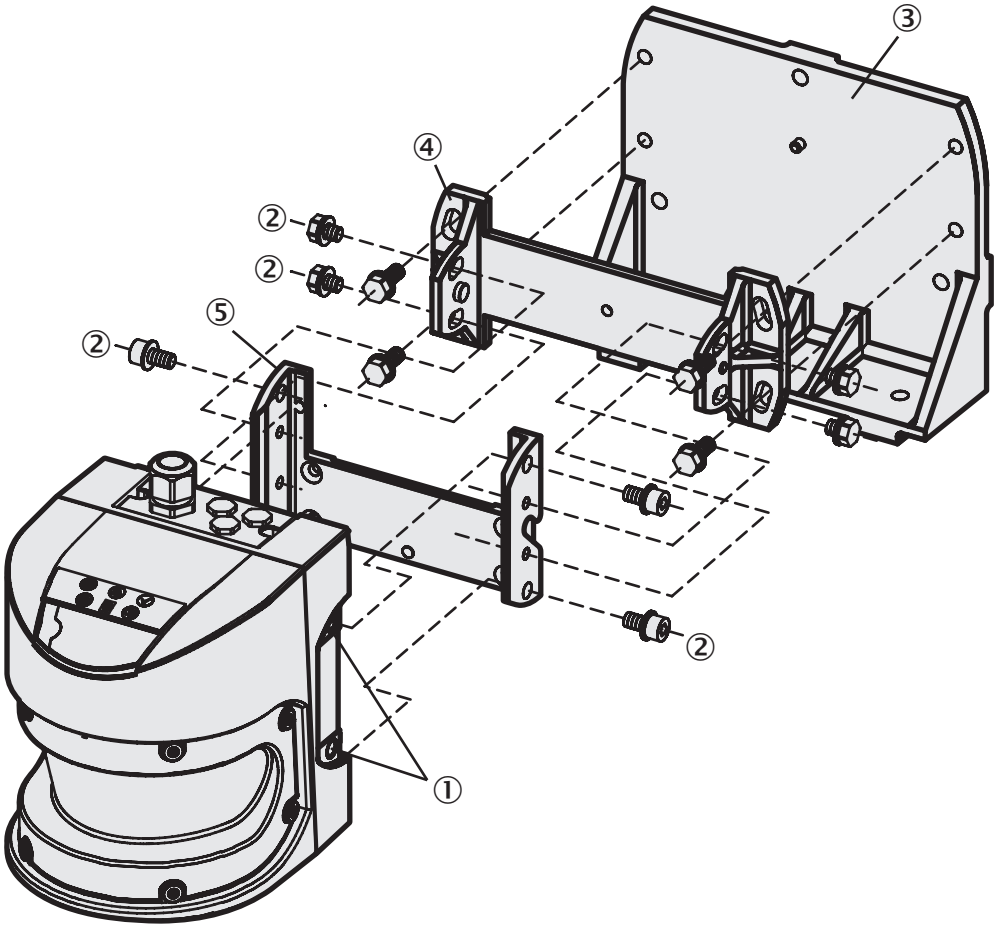

① Threaded holes M8x9
② Mounting screws
③ Mounting kit 3
④ Mounting kit 2
⑤ Mounting kit 1

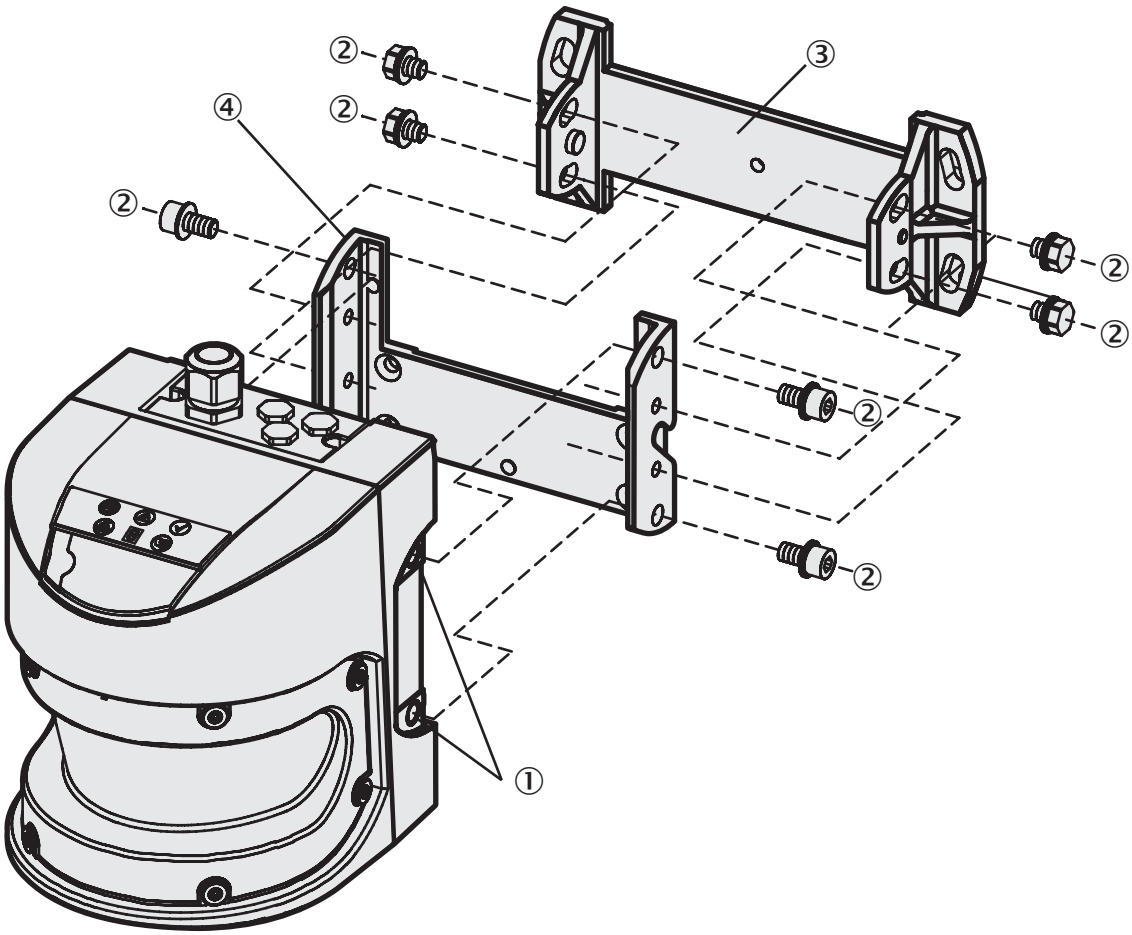

① Threaded holes M8x9
② Fixing screw
③ Mounting kit 2
④ Mounting kit 1

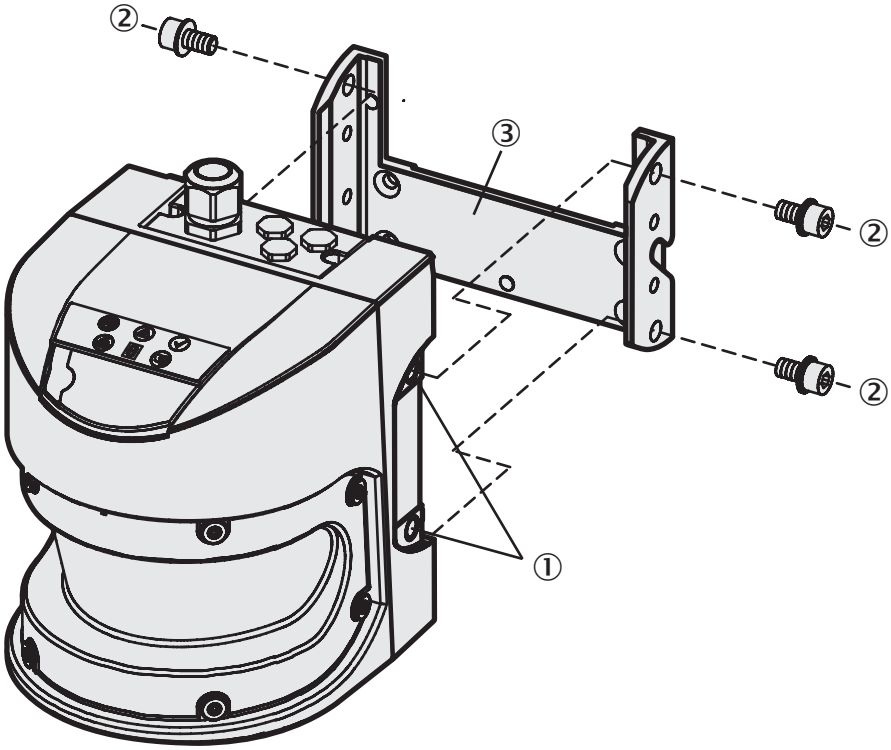

① Threaded holes M8x9
② Mounting screws
③ Mounting kit 1

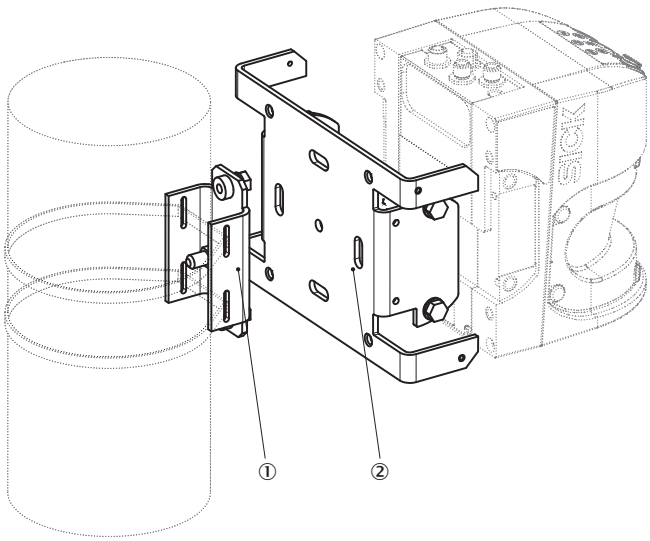

① Post bracket
② Mounting bracket 2059271

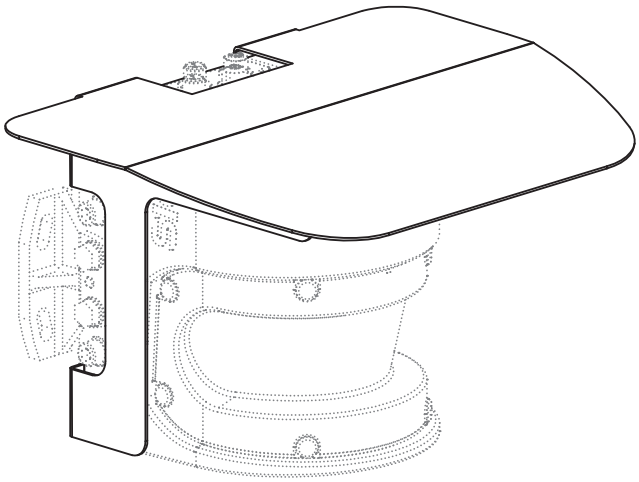

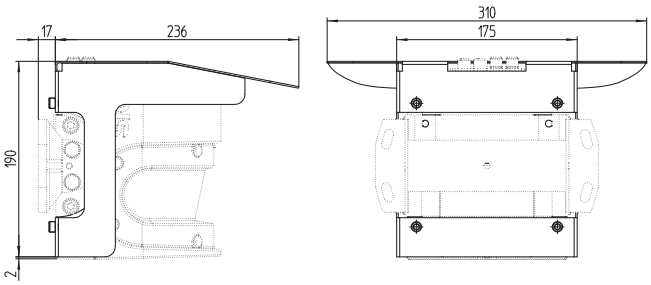

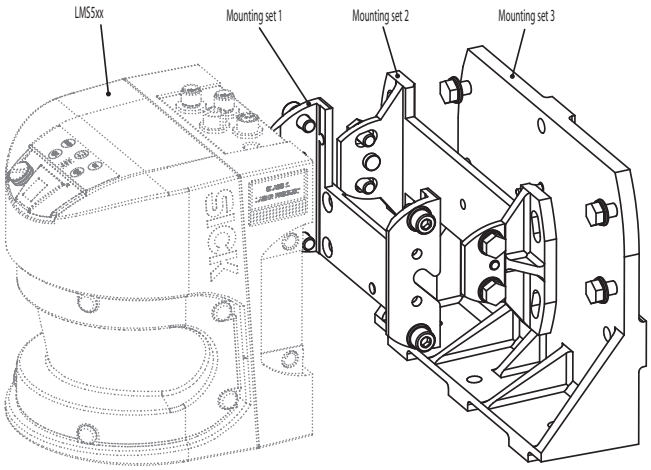

Connection type

Ethernet

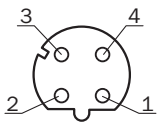

M12 female connector, 4-pin, D-coded
① TX+
② RX+
③ TX-
④ RX-

PIN assignment

Data

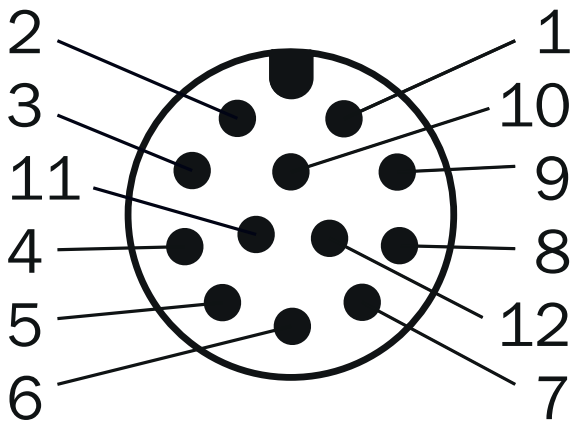

M12, 12-pin male connector, A-coded
① V_S OUT
② RD-/RxD
③ OUT1
④ GND RS/CAN
⑤ OUT2
⑥ Reserved
⑦ TD-/TxD
⑧ Reserved
⑨ RD+
⑩ TD+
⑪ CAN LOW
⑫ CAN HIGH

I/O

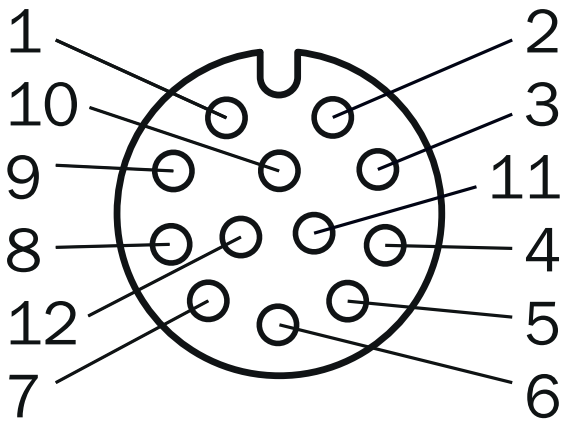

M12, 12-pin female connector, A-coded (I/O)

① V_S OUT
② GND IN1/2
③ In_1
④ GND IN3/4/IN Sync
⑤ In_2
⑥ In3
⑦ GND Out 3 ... 6
⑧ IN4/IN Sync
⑨ OUT3
⑩ OUT4
⑪ OUT5
⑫ OUT6/OUT Sync

POWER connection

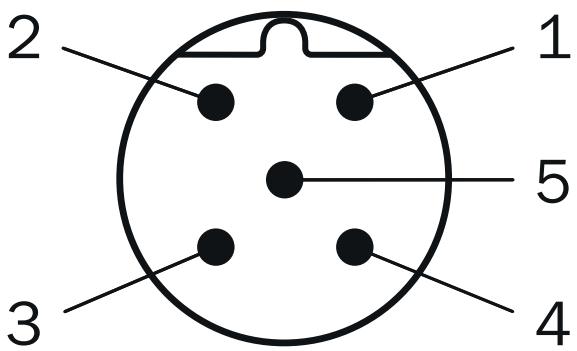

Male connector M12, 5-pin, A-coded
① V_s
② V_s Heat.
③ GND
④ Reserved
⑤ GND heat.

Recommended accessories

Other models and accessories ➜ www.sick.com/LMS5xx

	Brief description	Type	Part no.
Mounting brackets and plates			
	1 piece, mounting bracket for direct mounting, from the rear, on wall or machine, not adjustable, Aluminum	Mounting kit 1	2015623
	1 piece, mounting bracket for rear mounting on wall or machine, adjustable longitudinal and lateral axes, only in conjunction with mounting kit 1 (2015623), Aluminum	Mounting kit 2	2015624
Plug connectors and cables			
	• **Connection type head A:** Male connector, M12, 4-pin, straight, D-coded • **Connection type head B:** Male connector, RJ45, 4-pin, straight • **Signal type:** Ethernet, PROFINET • **Cable:** 5 m, 4-wire, PUR, halogen-free • **Description:** Ethernet, PROFINET, shielded • **Application:** Drag chain operation, Zones with oils and lubricants	YM2D24-050PN1MRJA4	2106184

	Brief description	Type	Part no.
Others			
	• **Connection type head A:** Female connector, M12, 5-pin, straight, A-coded • **Connection type head B:** Flying leads • **Signal type:** Power • **Cable:** 5 m, 4-wire, PUR, halogen-free • **Description:** Power, shielded • **Connection systems:** Flying leads	YF2A64-050XXXXLEAX	6036159
	• **Connection type head A:** Female connector, M12, 12-pin, straight, A-coded • **Connection type head B:** Flying leads • **Signal type:** Sensor/actuator cable, I/O • **Cable:** 5 m, 12-wire, PUR, halogen-free • **Description:** Sensor/actuator cable, I/O, twisted pair, shielded • **Connection systems:** Flying leads • **Application:** Zones with oils and lubricants	YF2A2B-050UD3XLEAX	6042735
	• **Connection type head A:** Male connector, M12, 12-pin, straight, A-coded • **Connection type head B:** Flying leads • **Signal type:** Sensor/actuator cable, I/O • **Cable:** 5 m, 12-wire, PUR, halogen-free • **Description:** Sensor/actuator cable, I/O, twisted pair, shielded • **Connection systems:** Flying leads • **Application:** Drag chain operation	YM2A2B-050UD3XLEAX	6042732

Recommended services

Additional services ➔ www.sick.com/LMS5xx

	Type	Part no.
Maintenance		
• **Product area:** 2D LiDAR sensors, 3D LiDAR sensors • **Range of services:** Inspection, analysis and restoring of defined functions, Inspection and adaptation of basic settings, parameters of field application, filters for raw data output, and product-specific configuration • **Duration:** Additional work will be invoiced separately • **Travel expenses:** The prices do not include travel costs such as hotel, flight, travel time and expenses.	Maintenance of LiDAR sensors	1682593
Commissioning		
• **Product area:** 2D LiDAR sensors, 3D LiDAR sensors • **Range of services:** Inspection of connection, fine adjustment, configuration of monitored areas, configuration and optimization of parameters as well as tests, Setup of previously defined functions of basic settings, parameters of field application, filters for raw data output and product-specific configuration • **Travel expenses:** The prices do not include travel costs such as hotel, flight, travel time and expenses. • **Duration:** Additional work will be invoiced separately	Commissioning LiDAR sensors	1680672
Extended warranty		
• **Product area:** Identification solutions, machine vision, Detection and ranging solutions, safety camera sensors, Safety laser scanners, Safety radar sensors • **Range of services:** The services correspond to the scope of the statutory manufacturer warranty (SICK general terms of delivery). • **Duration:** Five-year warranty from delivery date.	Extended warranty for a total of five years from delivery date	1680671

SICK AT A GLANCE

SICK is one of the leading manufacturers of intelligent sensors and sensor solutions for industrial applications. A unique range of products and services creates the perfect basis for controlling processes securely and efficiently, protecting individuals from accidents and preventing damage to the environment.

We have extensive experience in a wide range of industries and understand their processes and requirements. With intelligent sensors, we can deliver exactly what our customers need. In application centers in Europe, Asia and North America, system solutions are tested and optimized in accordance with customer specifications. All this makes us a reliable supplier and development partner.

Comprehensive services complete our offering: SICK LifeTime Services provide support throughout the machine life cycle and ensure safety and productivity.

For us, that is "Sensor Intelligence."

WORLDWIDE PRESENCE:

Contacts and other locations –www.sick.com

SICK
Sensor Intelligence.