Product data sheet

C40E-1002CB010

C4000 Advanced

SAFETY LIGHT CURTAINS

SICK
Sensor Intelligence.

Illustration may differ

Ordering information

Resolution	Scanning range	Protective field height	System part	Type	Part no.
20 mm	21 m	1,050 mm	Receiver	C40E-1002CB010	1018797

Other models and accessories → www.sick.com/C4000_Advanced

Detailed technical data

Features

Application	Normal industrial environment
System part	Receiver
Resolution	20 mm
Scanning range	21 m
Protective field height	1,050 mm
Response time	16 ms [1)]
Synchronization	Optical synchronisation

[1)] Without beam coding, without blanking, no cascaded systems. Other response times see operating instructions.

Safety-related parameters

Type	Type 4 (IEC 61496-1)
Safety integrity level	SIL 3 (IEC 61508)
Category	Category 4 (EN ISO 13849)
Performance level	PL e (EN ISO 13849)
PFH_D (mean probability of a dangerous failure per hour)	$15 * 10^{-9}$ (EN ISO 13849) $43 * 10^{-9}$ (EN ISO 13849) $63 * 10^{-9}$ (EN ISO 13849)
T_M (mission time)	20 years (EN ISO 13849)
Safe state in the event of a fault	At least one OSSD is in the OFF state.

Functions

	Functions	Delivery status
Protective operation	✓	
Restart interlock	✓	External
External device monitoring (EDM)	✓	Deactivated

	Functions	Delivery status
Beam coding	✓	Uncoded
Configurable scanning range	✓	0 m ... 6 m
Reduced resolution	✓	Deactivated
Fixed blanking	✓	Deactivated
Floating blanking	✓	Deactivated
Safe SICK device communication via EFI	✓	

Functions in combination with UE402

Bypass	✓
Operating mode switching	✓
PSDI mode	✓

Interfaces

System connection	Hirschmann male connector M26, 12-pin
Direction of cable connection	Straight
Conductor cross section	0.75 mm²
Permitted cable length	50 m [1]
Configuration connection	Female connector M8, 4-pin
Configuration method	PC with CDS (Configuration and Diagnostic Software)
Display elements	7-segment display

[1] Depending on load, power supply and wire cross-section. The technical specifications must be observed.

Electrical data

Protection class	III (IEC 61140)
Supply voltage V_S	24 V DC (19.2 V ... 28.8 V) [1]
Residual ripple	≤ 10 % [2]
Output signal switching devices (OSSDs)	
Type of output	2 PNP semiconductors, short-circuit protected, cross-circuit monitored [3]
ON state, switching voltage HIGH	24 V DC (V_S – 2.25 V DC ... V_S)
OFF state, switching voltage LOW	≤ 2 V DC
Current-carrying capacity per OSSD	≤ 500 mA

[1] The external voltage supply must be capable of buffering brief mains voltage failures of 20 ms as specified in EN 60204-1. Suitable power supplies are available as accessories from SICK.
[2] Within the limits of V_S.
[3] Applies to the voltage range between –30 V and +30 V.

Mechanical data

Dimensions	See dimensional drawing
Housing cross-section	48 mm x 40 mm
Housing material	Aluminum extruded profile
Weight	2,280 g

Ambient data

Enclosure rating	IP65 (EN 60529)
Ambient operating temperature	0 °C ... +55 °C

Storage temperature	–25 °C ... +70 °C
Air humidity	15 % ... 95 %, Non-condensing
Vibration resistance	5 g, 10 Hz ... 55 Hz (EN 60068-2-6)
Shock resistance	10 g, 16 ms (EN 60068-2-27)

Other information

Wave length	850 nm

Classifications

ECLASS 5.0	27272704
ECLASS 5.1.4	27272704
ECLASS 6.0	27272704
ECLASS 6.2	27272704
ECLASS 7.0	27272704
ECLASS 8.0	27272704
ECLASS 8.1	27272704
ECLASS 9.0	27272704
ECLASS 10.0	27272704
ECLASS 11.0	27272704
ECLASS 12.0	27272704
ETIM 5.0	EC002549
ETIM 6.0	EC002549
ETIM 7.0	EC002549
ETIM 8.0	EC002549
UNSPSC 16.0901	46171620

Dimensional drawing (Dimensions in mm (inch))

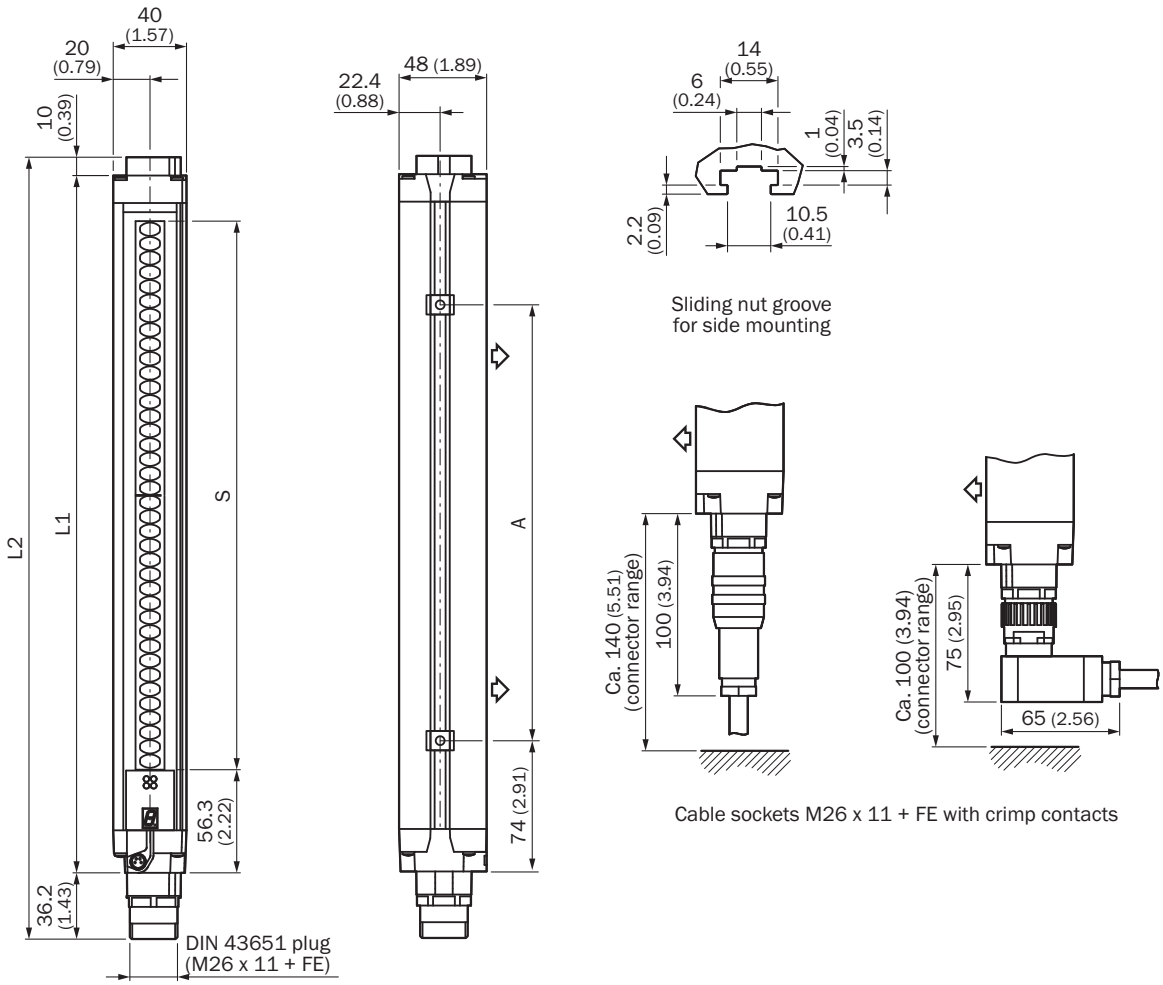

Illustration sender (receiver mirror image)

	L1	L2	A
300	381	427	224
450	532	578	374
600	682	728	524
750	833	879	674
900	984	1.030	824
1.050	1.134	1.180	974
1.200	1.283	1.329	1.124
1.350	1.435	1.481	1.274
1.500	1.586	1.632	1.424
1.650	1.736	1.782	1.574
1.800	1.887	1.933	1.724

Connection diagram

C4000 Advanced safety light curtain on UE402 safety switching amplifier

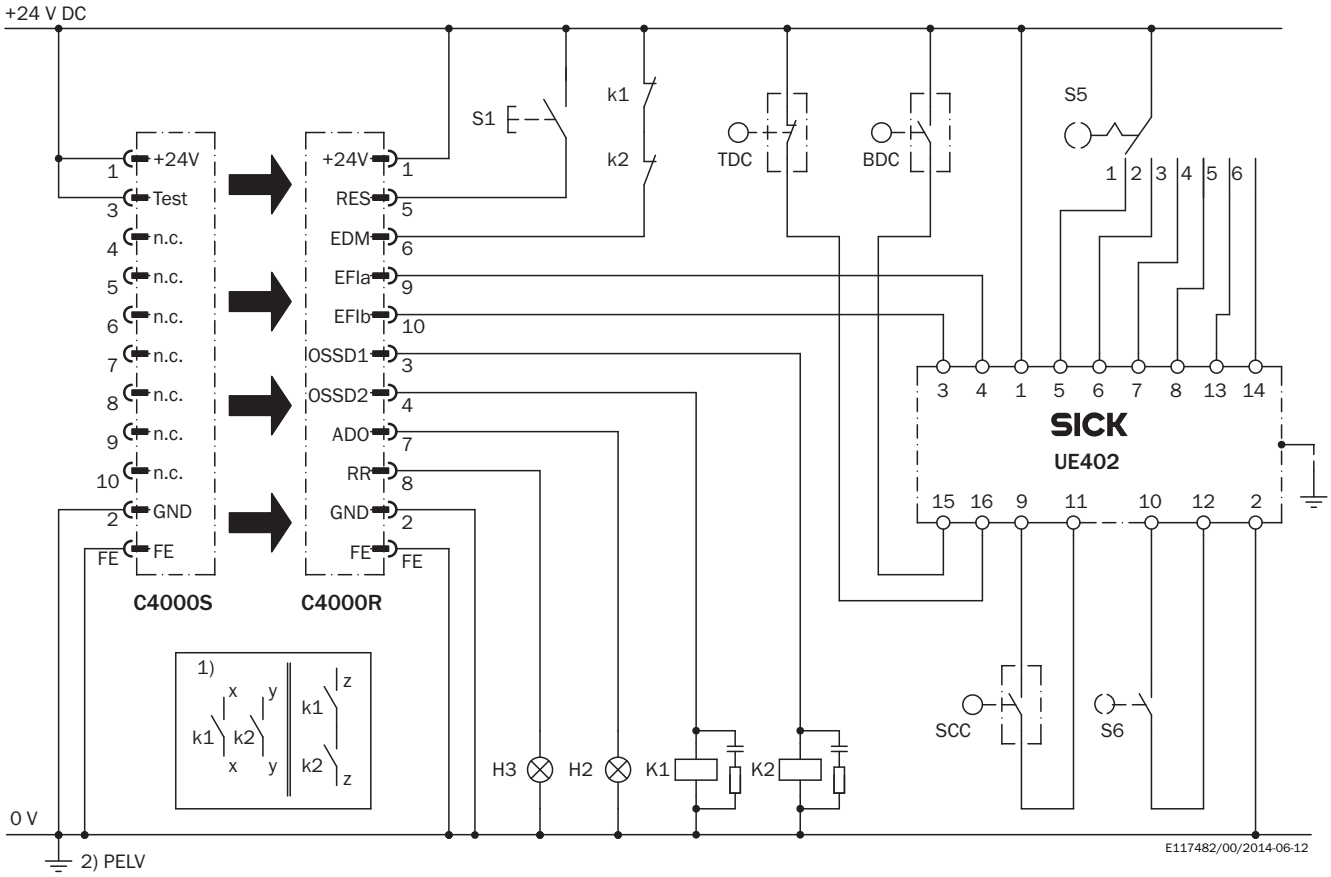

Aufgabe
Anbindung eines Sicherheits-Lichtvorhanges C4000 Advanced mit UE402 in eine Steuerung. 6 parametrierbare Betriebsarten mit Wiederanlaufsperre und Schützkontrolle. Taktbetrieb mit TDC, BDC, SCC. Ausblendbereiche einlernbar.
Wirkungsweise
Wenn kein Gegenstand im aktiven Schutzfeld detektiert wird und die Schütze K1 und K2 sich in Ruhelage befinden blinkt die Lampe H3 als Aufforderung, das Befehlsgerät S1 zu betätigen. Wenn S1 betätigt (Taster wird betätigt und losgelassen) werden die OSSDs eingeschaltet. Diese schalten die Schütze K1 und K2 ein. Bei Detektion eines Gegenstandes im aktiven Schutzfeld schalten die OSSDs die Schütze K1 und K2 ab.
Fehlerbetrachtung
Das Fehlverhalten eines der Schütze K1 oder K2 führt nicht zum Verlust der Abschaltfunktion. Querschlüsse und Kurzschlüsse der OSSDs werden erkannt und führen zum Sperrzustand (Lock-Out). Die Manipulation (Festklemmen) des Tasters S1 verhindert die Freigabe der Ausgangskreise.
Anmerkungen:
Die Wirkunsgweise der parametrierbaren Funktionen ist den jeweiligen Betriebsanleitungen der eingebundenen Geräte zu entnehmen. Die dabei enthaltenen Angaben sind zu beachten.

Recommended accessories

Other models and accessories ➜ www.sick.com/C4000_Advanced

	Brief description	Type	Part no.
Alignment aids			
	Laser alignment aid for various sensors, laser class 2 (IEC 60825). Do not look into the beam!, 19 mm x 67.3 mm x 66.9 mm	AR60	1015741
	Adapter AR60 for housing cross-section 48 mm x 40 mm	AR60 adapter, 48x40	4032461
	Adapter AR60 for housing cross-section 48 mm x 40 mm in PU3H device column	AR60 adapter, 48x40, PU3H	4056731
Optics cloths			
	Cloth for cleaning optical surfaces	Lens cloth	4003353
Mounting brackets and plates			
	4 pieces, Mounting kit 1, mounting bracket, rigid, L-shaped, including fixing screws and washers	BEF-3WNGBAST4	7021352
Plug connectors and cables			
	• **Connection type head A:** Female connector, M26, 12-pin, straight • **Description:** Unshielded • **Connection systems:** Crimp contacts • **Permitted cross-section:** 0.5 mm² ... 1.5 mm² • **Note:** 12 crimping contacts enclosed	DOS-0612G000GA3KM0	6020757
	• **Connection type head A:** Female connector, M26, 12-pin, angled • **Description:** Unshielded • **Connection systems:** Crimp contacts • **Permitted cross-section:** 0.5 mm² ... 1.5 mm² • **Note:** 12 crimping contacts enclosed	DOS-0612W000GA3KM0	6020758
	• **Connection type head A:** Male connector, M26, 12-pin, straight • **Description:** Unshielded • **Connection systems:** Crimp contacts • **Permitted cross-section:** 0.5 mm² ... 1.5 mm² • **Note:** 12 crimping contacts enclosed	STE-0612G000GA3KM0	6021191
	• **Connection type head A:** Male connector, M26, 12-pin, angled • **Description:** Unshielded • **Connection systems:** Crimp contacts • **Permitted cross-section:** 0.5 mm² ... 1.5 mm² • **Note:** 12 crimping contacts enclosed	STE-0612W000GA3KM0	6021192
Terminal and alignment brackets			
	4 pieces, Mounting kit 6, side bracket, rotatable, zinc diecast	BEF-1SHABAZN4	2019506
	4 pieces, Omega bracket, rotatable, fixable with only one screw, for mounting on the swivel mount	BEF-2SMMEAAL4	2044847
	4 pieces, Stainless steel bracket, rotatable, stainless steel 1.4350, stainless steel 1.4301	BEF-2SMMEAES4	2023708

	Brief description	Type	Part no.
	4 pieces, Mounting kit 2, rotatable, swivel mount, Polyamide PA6	BEF-2SMMEAKU4	2019659
Others			
	• **Connection type head A:** Male connector, M8, 4-pin, straight • **Connection type head B:** Male connector, USB-A, straight • **Cable:** 2 m, 4-wire, PVC • **Description:** Unshielded, Configuration cable with integrated RS-232 transducer on USB for connecting a sensor configuration connection (M8, 4-pin) to the USB interface of a PC	DSL-8U04G02M025KM1	6034574
	• **Connection type head A:** Male connector, M8, 4-pin, straight • **Connection type head B:** Male connector, USB-A, straight • **Cable:** 10 m, 4-wire, PVC • **Description:** Unshielded, Configuration cable with integrated RS-232 transducer on USB for connecting a sensor configuration connection (M8, 4-pin) to the USB interface of a PC	DSL-8U04G10M025KM1	6034575
	• **Connection type head A:** Female connector, M26, 12-pin, straight • **Connection type head B:** Flying leads • **Signal type:** Sensor/actuator cable • **Cable:** 5 m, 12-wire, PVC • **Description:** Sensor/actuator cable, unshielded • **Connection systems:** Flying leads	DOL-0612G05M075KM0	2022545
	• **Connection type head A:** Female connector, M26, 12-pin, straight • **Connection type head B:** Flying leads • **Signal type:** Sensor/actuator cable • **Cable:** 10 m, 12-wire, PVC • **Description:** Sensor/actuator cable, unshielded • **Connection systems:** Flying leads	DOL-0612G10M075KM0	2022547
	• **Connection type head A:** Female connector, M26, 12-pin, straight • **Connection type head B:** Flying leads • **Signal type:** Sensor/actuator cable • **Cable:** 15 m, 12-wire, PVC • **Description:** Sensor/actuator cable, unshielded • **Connection systems:** Flying leads	DOL-0612G15M075KM0	2022548
	• **Connection type head A:** Female connector, M26, 12-pin, straight • **Connection type head B:** Flying leads • **Signal type:** Sensor/actuator cable • **Cable:** 20 m, 12-wire, PVC • **Description:** Sensor/actuator cable, unshielded • **Connection systems:** Flying leads	DOL-0612G20M075KM0	2022549
	• **Connection type head A:** Female connector, M26, 12-pin, straight • **Connection type head B:** Flying leads • **Cable:** 5 m, PVC • **Description:** Unshielded • **Connection systems:** Flying leads • **Note:** Without EFI: Pin 9 and 10 not connected	DOL-0610G05M075KM1	2046888
	• **Connection type head A:** Female connector, M26, 12-pin, straight • **Connection type head B:** Flying leads • **Cable:** 10 m, PVC • **Description:** Unshielded • **Connection systems:** Flying leads • **Note:** Without EFI: Pin 9 and 10 not connected	DOL-0610G10M075KM1	2046889
Switching amplifiers			
	• **Applications:** Functionality upgrade • **Compatible sensor types:** C4000 safety light curtains • **Description:** Upgrades the C4000 Standard, Advanced, Palletizer, Entry/Exit, and Fusion to include the functions defined in the technical specifications, e.g., bypass, operating mode switching, and PSDI in the case of C4000 Standard, Advanced.	UE402	1023577

SICK AT A GLANCE

SICK is one of the leading manufacturers of intelligent sensors and sensor solutions for industrial applications. A unique range of products and services creates the perfect basis for controlling processes securely and efficiently, protecting individuals from accidents and preventing damage to the environment.

We have extensive experience in a wide range of industries and understand their processes and requirements. With intelligent sensors, we can deliver exactly what our customers need. In application centers in Europe, Asia and North America, system solutions are tested and optimized in accordance with customer specifications. All this makes us a reliable supplier and development partner.

Comprehensive services complete our offering: SICK LifeTime Services provide support throughout the machine life cycle and ensure safety and productivity.

For us, that is "Sensor Intelligence."

WORLDWIDE PRESENCE:

Contacts and other locations –www.sick.com

SICK
Sensor Intelligence.