Product data sheet

CM30-16BPP-EC1

CM

CAPACITIVE PROXIMITY SENSORS

SICK
Sensor Intelligence.

Illustration may differ

Ordering information

Type	Part no.
CM30-16BPP-EC1	6058153

Other models and accessories ➜ www.sick.com/CM

Detailed technical data

Features

Housing	Cylindrical thread design
Thread size	M30 x 1.5
Diameter	Ø 30 mm
Sensing range S_n	0 mm ... 16 mm
Safe sensing range S_a	12.24 mm [1]
Installation type	Flush
Switching frequency	50 Hz
Connection type	Male connector M12, 4-pin
Switching output	PNP
Output function	Complementary
Output characteristic	Wire configurable
Electrical wiring	DC 4-wire
Adjustment	Potentiometer, 11 turns (Sensitivity)
Enclosure rating	IP67 IP68 [2] IP69K
Items supplied	Mounting nut, PA12 plastic (2x) Screwdriver for potentiometer adjustment (1 x)

[1] For flush mounting in electrically conductive materials Sa = 0.8 x Sr at temperatures <0 °C and >60 °C.
[2] 1 m water depth / 60 min.

Mechanics/electronics

Supply voltage	10 V DC ... 36 V DC
Ripple	≤ 10 % [1]
Voltage drop	≤ 2 V DC [2]
Current consumption	12 mA [3]
Time delay before availability	≤ 200 ms
Hysteresis	3 % ... 20 %
Reproducibility	≤ 5 % [4] [5]
Temperature drift (of S_r)	± 10 %
EMC	According to EN 60947-5-2
Continuous current I_a	≤ 200 mA
Short-circuit protection	✓
Reverse polarity protection	✓
Power-up pulse protection	✓
Shock and vibration resistance	According to EN 60068
Ambient operating temperature	–30 °C ... +85 °C [6]
Ambient temperature, storage	–40 °C ... +85 °C
Housing material	Plastic, PBT
Housing length	74 mm
Thread length	59.5 mm
Tightening torque, max.	≤ 7.5 Nm
UL File No.	NRKH.E191603

[1] Of Ub.
[2] At I_a max.
[3] Without load.
[4] Of Sr.
[5] Supply voltage Ub and constant ambient temperature Ta.
[6] +120 °C short time, at the front of the sensor.

Safety-related parameters

$MTTF_D$	919 years
DC_{avg}	0 %
T_M (mission time)	20 years

Reduction factors

Note	The values are reference values which may vary
Metal	1
Water	1
PVC	Approx. 0.4
Oil	Approx. 0.25
Glass	0.6
Ceramics	0.5
Alcohol	0.7

Wood	0.2 ... 0.7

Installation note

Remark	Associated graphic see "Installation"
B	30 mm
C	30 mm
D	48 mm
F	48 mm

Classifications

eCl@ss 5.0	27270102
eCl@ss 5.1.4	27270102
eCl@ss 6.0	27270102
eCl@ss 6.2	27270102
eCl@ss 7.0	27270102
eCl@ss 8.0	27270102
eCl@ss 8.1	27270102
eCl@ss 9.0	27270102
eCl@ss 10.0	27270102
eCl@ss 11.0	27270102
eCl@ss 12.0	27274201
ETIM 5.0	EC002715
ETIM 6.0	EC002715
ETIM 7.0	EC002715
ETIM 8.0	EC002715
UNSPSC 16.0901	39122230

Installation note

Flush installation

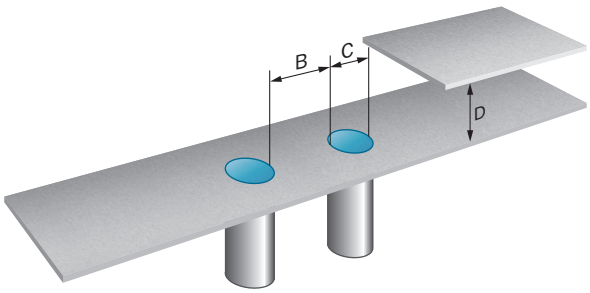

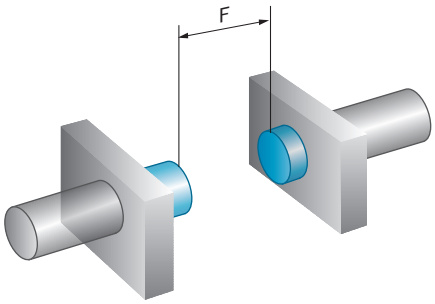

Shock and vibration resistance

Shock (IEC 60068-2-27):	30 G / 11ms, 3 pos, 3 neg per axis
Rough handling shocks (IEC 60068-2-31):	2 times from 1m, 100 times from 0,5m
Vibration (IEC 60068-2-6):	10 to 150 Hz, 1 mm / 15 G

Electromagnetic compatibility (EMC)

Electrostatic discharge (EN61000-4-2):	Contact discharge > 40 kV Air discharge > 40 kV
Electrical fast transients/burst (EN 61000-4-4):	+/- 4 kV
Surge (EN 61000-4-5):	Power supply > 2 kV (with 500 Ohm) Sensor output > 2 kV (with 500 Ohm)
Wire conducted disturbances (EN 61000-4-6):	> 20 Vrms
Power-frequency magnetic fields (EN 61000-4-8):	Continous > 60 A/m, 75.9 µ tesla Short-time > 600 A/m, 759 µ tesla
Radiated RF electromagnetic fields (EN 61000-4-3):	> 20 V/m

Connection diagram

Cd-006

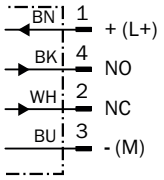

Response diagram

CM30, Flush installation

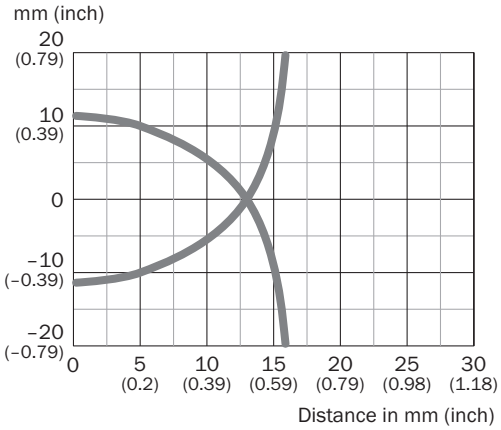

Dimensional drawing (Dimensions in mm (inch))

CM30, flush, connector

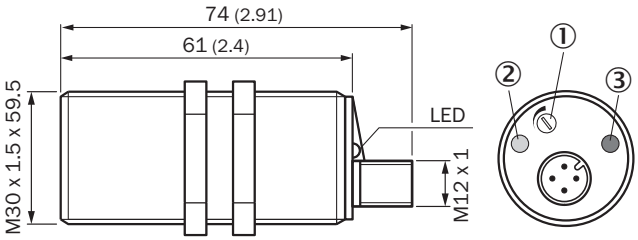

① Potentiometer for sensitivity adjustment
② LED yellow: status indicator
③ LED green: operating indicator

Recommended accessories

Other models and accessories → www.sick.com/CM

	Brief description	Type	Part no.
Mounting brackets and plates			
	Mounting plate for M30 sensors, steel, zinc coated, without mounting hardware	BEF-WG-M30	5321871
	Mounting bracket for M30 sensors, steel, zinc coated, without mounting hardware	BEF-WN-M30	5308445
Plug connectors and cables			
	Head A: female connector, M12, 4-pin, straight, A-coded Head B: Flying leads Cable: Sensor/actuator cable, PUR, halogen-free, unshielded, 2 m	YF2A14-020UB3XLEAX	2095607
	Head A: female connector, M12, 4-pin, straight, A-coded Head B: Flying leads Cable: Sensor/actuator cable, PVC, unshielded, 2 m	YF2A14-020VB3XLEAX	2096234
	Head A: female connector, M12, 4-pin, straight, A-coded Head B: Flying leads Cable: Sensor/actuator cable, PUR, halogen-free, unshielded, 5 m	YF2A14-050UB3XLEAX	2095608
	Head A: female connector, M12, 4-pin, straight, A-coded Head B: Flying leads Cable: Sensor/actuator cable, PVC, unshielded, 5 m	YF2A14-050VB3XLEAX	2096235
	Head A: female connector, M12, 4-pin, angled, A-coded Head B: Flying leads Cable: Sensor/actuator cable, PUR, halogen-free, unshielded, 2 m	YG2A14-020UB3XLEAX	2095766
	Head A: female connector, M12, 4-pin, angled, A-coded Head B: Flying leads Cable: Sensor/actuator cable, PVC, unshielded, 2 m	YG2A14-020VB3XLEAX	2095895
	Head A: female connector, M12, 4-pin, angled, A-coded Head B: Flying leads Cable: Sensor/actuator cable, PUR, halogen-free, unshielded, 5 m	YG2A14-050UB3XLEAX	2095767

	Brief description	Type	Part no.
	Head A: female connector, M12, 4-pin, angled, A-coded Head B: Flying leads Cable: Sensor/actuator cable, PVC, unshielded, 5 m	YG2A14-050VB3XLEAX	2095897
	Head A: female connector, M12, 4-pin, straight Cable: unshielded	DOS-1204-G	6007302
	Head A: female connector, M12, 4-pin, angled Cable: unshielded	DOS-1204-W	6007303

SICK AT A GLANCE

SICK is one of the leading manufacturers of intelligent sensors and sensor solutions for industrial applications. A unique range of products and services creates the perfect basis for controlling processes securely and efficiently, protecting individuals from accidents and preventing damage to the environment.

We have extensive experience in a wide range of industries and understand their processes and requirements. With intelligent sensors, we can deliver exactly what our customers need. In application centers in Europe, Asia and North America, system solutions are tested and optimized in accordance with customer specifications. All this makes us a reliable supplier and development partner.

Comprehensive services complete our offering: SICK LifeTime Services provide support throughout the machine life cycle and ensure safety and productivity.

For us, that is "Sensor Intelligence."

WORLDWIDE PRESENCE:

Contacts and other locations –www.sick.com

SICK
Sensor Intelligence.