Product data sheet

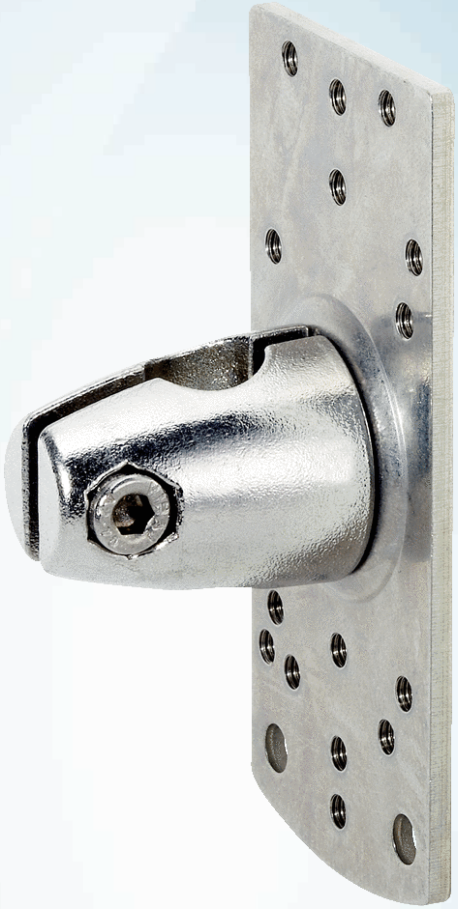

BEF-KHS-N03

SICK
Sensor Intelligence.

Ordering information

Type	Part no.
BEF-KHS-N03	2051609

Included in delivery: BEF-KHS-KH3 (1)

Other models and accessories → www.sick.com/

Detailed technical data

Technical specifications

Accessory group	Universal bar clamp systems
Material	Zinc plated steel (sheet), Zinc die cast (clamping bracket)
Items supplied	Universal clamp (5322626), mounting hardware
Description	Plate N03 for universal clamp bracket, zinc coated
Usable for	UC12 W14-2 W18-2 W18-3 W11-2 W12-3 W12-2 Laser W12G W12 Teflon W16 W24-2 Ex PowerProx W11G-2 TranspaTect W18-3 Ex W24-2 PL50A PL80A PL40A P250

Classifications

eCl@ss 5.0	27279202
eCl@ss 5.1.4	27279202
eCl@ss 6.0	27279202
eCl@ss 6.2	27279202
eCl@ss 7.0	27279202
eCl@ss 8.0	27279202
eCl@ss 8.1	27279202
eCl@ss 9.0	27273701
eCl@ss 10.0	27273701
eCl@ss 11.0	27273701

eCl@ss 12.0	27273701
ETIM 5.0	EC002024
ETIM 6.0	EC002024
ETIM 7.0	EC002024
ETIM 8.0	EC002024
UNSPSC 16.0901	32131023

Dimensional drawing (Dimensions in mm (inch))

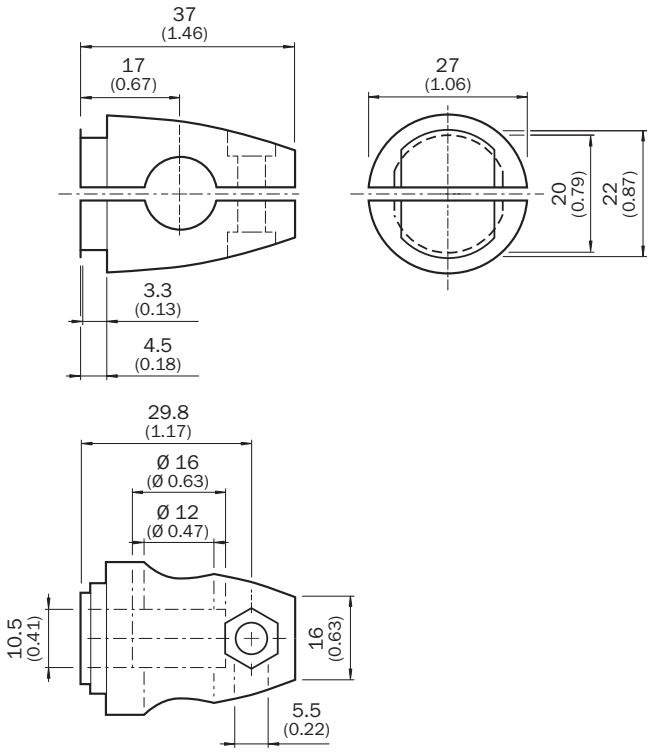

BEF-KHS-KH3

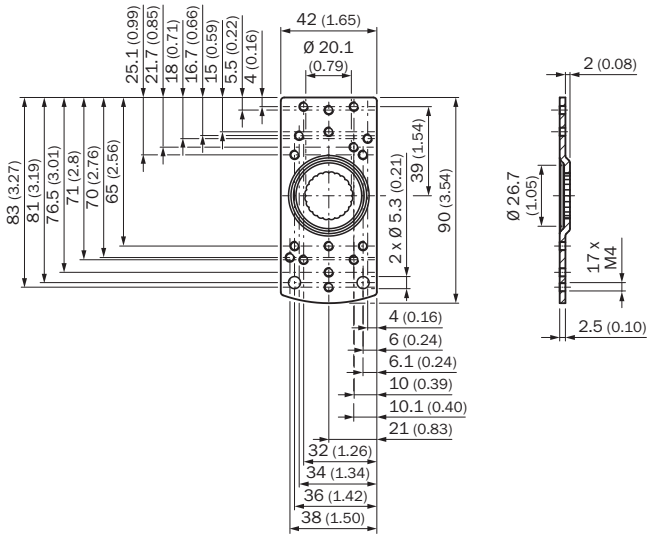

SICK AT A GLANCE

SICK is one of the leading manufacturers of intelligent sensors and sensor solutions for industrial applications. A unique range of products and services creates the perfect basis for controlling processes securely and efficiently, protecting individuals from accidents and preventing damage to the environment.

We have extensive experience in a wide range of industries and understand their processes and requirements. With intelligent sensors, we can deliver exactly what our customers need. In application centers in Europe, Asia and North America, system solutions are tested and optimized in accordance with customer specifications. All this makes us a reliable supplier and development partner.

Comprehensive services complete our offering: SICK LifeTime Services provide support throughout the machine life cycle and ensure safety and productivity.

For us, that is "Sensor Intelligence."

WORLDWIDE PRESENCE:

Contacts and other locations –www.sick.com

SICK
Sensor Intelligence.