Product data sheet

YM2D24-200PN1MRJA4

Industrial Ethernet cables and fieldbus cables

PLUG CONNECTORS AND CABLES

SICK
Sensor Intelligence.

Ordering information

Type	Part no.
YM2D24-200PN1MRJA4	2113267

Other models and accessories → www.sick.com/Industrial_Ethernet_cables_and_fieldbus_cables

Detailed technical data

Technical specifications

Accessory group	Plug connectors and cables
Accessory family	Connection cables
Connection type head A	Male connector, M12, 4-pin, straight, D-coded
Connection type head B	Male connector, RJ45, 4-pin, straight
Locking plug connector	Screw-on connection (M12), snap-in locking (RJ45)
Connector material	TPU
Connector color	Black
Locking nut material	Zinc die-cast, nickel-plated
Tightening torque	0.6 Nm
Width across flats	13
Cable	20 m, 4-wire, PUR, halogen-free
Jacket material	PUR, halogen-free
Jacket color	Green
Cable diameter	6.7 mm
Conductor cross section	0.34 mm²
Shielding	Shielded
Bending radius	
Flexible use	> 12 x cable diameter
Stationary position	> 5 x cable diameter
Drag chain operation	> 12 x cable diameter
Bending cycles	3,000,000
Nominal voltage, cable	300 V AC
Test voltage, cable	2,000 V AC
Reference voltage	
	48 V AC
	60 V DC
Rated impulse voltage	1 kV
Current loading	1.5 A
Traversing speed	3.3 m/s
Travelling distance	5 m

Acceleration	≤ 2 m/s²
Signal type	Ethernet, PROFINET
Transmission characteristics	CAT5e
Data transmission rate	≤ 0.1 Gbit/s
Application	Drag chain operation Zones with oils and lubricants
Authorizations	CE UL
Enclosure rating	IP67 (M12), IP20 (RJ45)
Ambient operating temperature	
Flexible use	–30 °C ... +70 °C
Stationary position	–40 °C ... +80 °C
Drag chain operation	–30 °C ... +70 °C
Head	–25 °C ... +85 °C
Contamination rating	3
Insulation resistance	> 100 MΩ
Overvoltage category	III
Specific insulation resistance	< 30 mΩ
Thermal resistance, piping	Flame retardant acc. to UL 1581 Section 1090, Section 1100 (FT2), IEC 60332-1-2 Std.

Classifications

ECLASS 5.0	19030312
ECLASS 5.1.4	19030312
ECLASS 6.0	27060304
ECLASS 6.2	27060304
ECLASS 7.0	27060304
ECLASS 8.0	27060304
ECLASS 8.1	27060304
ECLASS 9.0	27060304
ECLASS 10.0	27060304
ECLASS 11.0	27060304
ECLASS 12.0	27060304
ETIM 5.0	EC000830
ETIM 6.0	EC000830
ETIM 7.0	EC003249
ETIM 8.0	EC003249
UNSPSC 16.0901	26121604

Dimensional drawing (Dimensions in mm (inch))

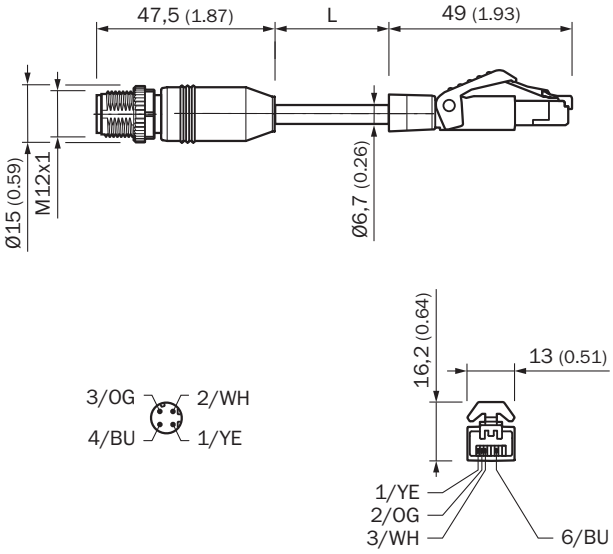

SICK AT A GLANCE

SICK is one of the leading manufacturers of intelligent sensors and sensor solutions for industrial applications. A unique range of products and services creates the perfect basis for controlling processes securely and efficiently, protecting individuals from accidents and preventing damage to the environment.

We have extensive experience in a wide range of industries and understand their processes and requirements. With intelligent sensors, we can deliver exactly what our customers need. In application centers in Europe, Asia and North America, system solutions are tested and optimized in accordance with customer specifications. All this makes us a reliable supplier and development partner.

Comprehensive services complete our offering: SICK LifeTime Services provide support throughout the machine life cycle and ensure safety and productivity.

For us, that is "Sensor Intelligence."

WORLDWIDE PRESENCE:

Contacts and other locations –www.sick.com

SICK
Sensor Intelligence.