Product data sheet

GL10-P4211

G10

SMALL PHOTOELECTRIC SENSORS

SICK
Sensor Intelligence.

Illustration may differ

Ordering information

Type	Part no.
GL10-P4211	1065890

Other models and accessories ➜ www.sick.com/G10

Detailed technical data

Features

Functional principle	Photoelectric retro-reflective sensor
Functional principle detail	Dual lens
Dimensions (W x H x D)	20 mm x 50 mm x 39 mm
Housing design (light emission)	Rectangular
Sensing range max.	0.08 m ... 15 m [1)] 0.08 m ... 12 m [2)]
Sensing range	0.15 m ... 12 m [1)] 0.15 m ... 10 m [2)]
Type of light	Visible red light
Light source	PinPoint LED [3)]
Light spot size (distance)	Ø 58 mm (5 m)
Wave length	625 nm
Adjustment	Potentiometer, 270°

[1)] Reflector PL80A.
[2)] Reflector P250.
[3)] Average service life: 100,000 h at T_U = +25 °C.

Mechanics/electronics

Supply voltage	10 V DC ... 30 V DC [1]
Ripple	< 5 V_{pp} [2]
Current consumption	20 mA
Switching output	PNP
Switching mode	Light/dark switching
Switching mode selector	Selectable via light/dark selector
Output current $I_{max.}$	≤ 100 mA
Response time	≤ 500 µs [3]
Switching frequency	1,000 Hz [4]
Connection type	Male connector M12, 4-pin
Circuit protection	A [5] B [6] C [7] D [8]
Protection class	III
Weight	35 g
Polarisation filter	✓
Housing material	Plastic, ABS/PMMA
Enclosure rating	IP67
Electromagnetic compatibility (EMC)	EN 60947-5-2
Ambient operating temperature	–30 °C ... +60 °C
Ambient temperature, storage	–40 °C ... +70 °C
UL File No.	NRKH.E348498 & NRKH7.E348498
More standards	UL325 [9]

[1] Limit values when operated in short-circuit protected network: max. 8 A.
[2] May not exceed or fall below U_V tolerances.
[3] Signal transit time with resistive load.
[4] With light/dark ratio 1:1.
[5] A = V_S connections reverse-polarity protected.
[6] B = inputs and output reverse-polarity protected.
[7] C = interference suppression.
[8] D = outputs overcurrent and short-circuit protected.
[9] Complies with the UL325 standard when used with sturdy protection hood (e.g. BEF-G10WSG, 2071960).

Safety-related parameters

$MTTF_D$	1,567 years
DC_{avg}	0 %
T_M (mission time)	20 years

Classifications

eCl@ss 5.0	27270902
eCl@ss 5.1.4	27270902
eCl@ss 6.0	27270902
eCl@ss 6.2	27270902

eCl@ss 7.0	27270902
eCl@ss 8.0	27270902
eCl@ss 8.1	27270902
eCl@ss 9.0	27270902
eCl@ss 10.0	27270902
eCl@ss 11.0	27270902
eCl@ss 12.0	27270902
ETIM 5.0	EC002717
ETIM 6.0	EC002717
ETIM 7.0	EC002717
ETIM 8.0	EC002717
UNSPSC 16.0901	39121528

Connection diagram

Cd-066

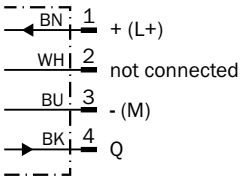

Characteristic curve

GL10

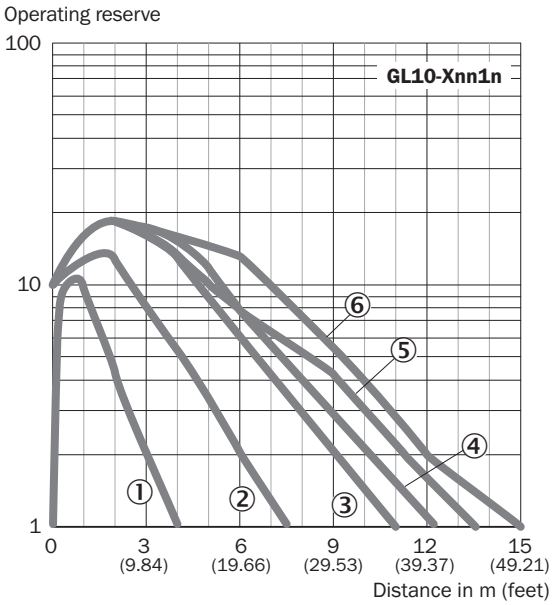

Light spot size

Light spot size

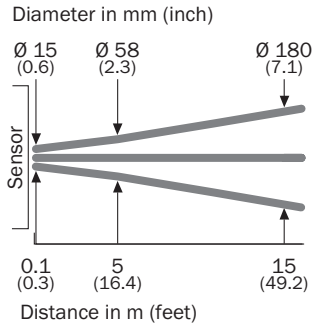

Sensing range diagram

GL10

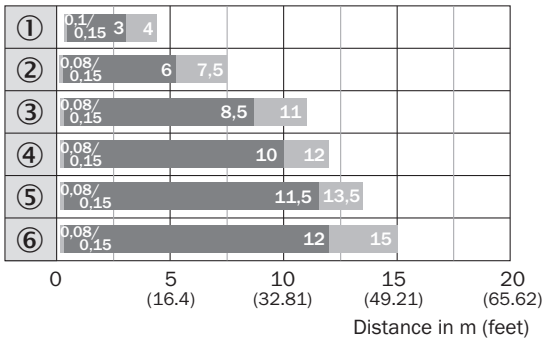

Sensing range Sensing range max.

① Reflective tape REF-IRF-56
② Reflector PL20A
③ Reflector PL30A
④ Reflector P250
⑤ Reflector PL40A
⑥ Reflector PL80A

Adjustments

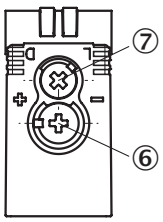

⑥ Adjustment of sensing range
⑦ Light/dark selector

Dimensional drawing (Dimensions in mm (inch))

GTE10, GL10, GL10G, DC, connector

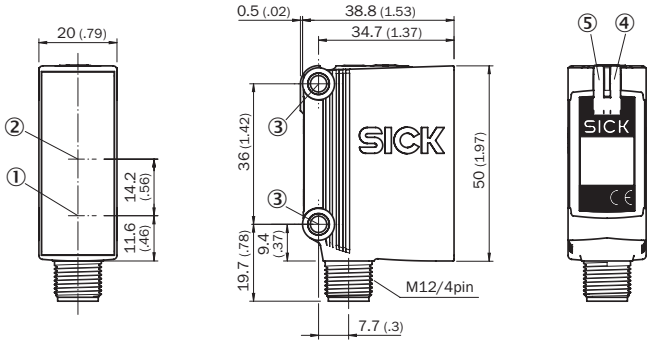

① Center of optical axis, sender
② Center of optical axis, receiver
③ Mounting hole, Ø 4.2 mm
④ LED indicator yellow: Status of received light beam
⑤ LED indicator green: power on

Recommended accessories

Other models and accessories ➜ www.sick.com/G10

	Brief description	Type	Part no.
Universal bar clamp systems			
	Q-Lock, bar clamp system for G10 and reflector P250, Die-cast zinc, steel, zinc coated	BEF-KHSQ12R01	2071260
Mounting brackets and plates			
	Universal mounting bracket for reflectors, steel, zinc coated	BEF-WN-REFX	2064574
Plug connectors and cables			
	Head A: female connector, M12, 4-pin, straight, A-coded Head B: Flying leads Cable: Sensor/actuator cable, PVC, unshielded, 5 m	YF2A14-050VB3XLEAX	2096235
	Head A: male connector, M12, 4-pin, straight Cable: unshielded	STE-1204-G	6009932
Reflectors			
	Rectangular, screw connection, 51 mm x 61 mm, PMMA/ABS, Screw-on, 2 hole mounting	P250	5304812

SICK AT A GLANCE

SICK is one of the leading manufacturers of intelligent sensors and sensor solutions for industrial applications. A unique range of products and services creates the perfect basis for controlling processes securely and efficiently, protecting individuals from accidents and preventing damage to the environment.

We have extensive experience in a wide range of industries and understand their processes and requirements. With intelligent sensors, we can deliver exactly what our customers need. In application centers in Europe, Asia and North America, system solutions are tested and optimized in accordance with customer specifications. All this makes us a reliable supplier and development partner.

Comprehensive services complete our offering: SICK LifeTime Services provide support throughout the machine life cycle and ensure safety and productivity.

For us, that is "Sensor Intelligence."

WORLDWIDE PRESENCE:

Contacts and other locations –www.sick.com

SICK
Sensor Intelligence.