Product data sheet

V2D631R-MKMEB1

Lector63x

IMAGE-BASED CODE READERS

SICK
Sensor Intelligence.

Illustration may differ

Ordering information

Type	Part no.
V2D631R-MKMEB1	1080076

Included in delivery: C-mount lens (1), Distance bracket (1), Optics protection hood (PMMA) (1), VI55I-WH1441M0 (1), V2D631R-MXCXB0 (1)

Other models and accessories → www.sick.com/Lector63x

Detailed technical data

Features

Variant	Complete device
Optical focus	Adjustable focus (manually)
Sensor	CMOS matrix sensor, grayscale values
Sensor resolution	1,280 px x 1,024 px
Illumination	Integrated
Illumination color	White, LED, Visible,
Feedback spot	LED, Visible, green, 525 nm, ± 15 nm LED, Visible, Red, 630 nm, ± 20 nm
Alignment aid	Laser, Red, 630 nm ... 680 nm
Laser class	1, complies with 21 CFR 1040.10 except for the conformance according to “Laser Notice No. 50” from June 24, 2007 (IEC 60825-1:2014, EN 60825-1:2014+A11:2021)
Lens	C-mount (compact)
Optical format	1/1.8"
Focal length	16 mm
Aperture	8
Reading distance	50 mm ... 2,200 mm [1)]
Scanning frequency	≤ 50 Hz, With resolution of 1.3 megapixels
Code resolution	≥ 0.1 mm [1)]

[1)] Depends on lens used, for details see field of view diagram.

Mechanics/electronics

Connection type	1 x M12, 17-pin plug (serial, CAN, I/Os, power supply) 1 x M12, 8-pin socket (Ethernet, 1 GBit/s) 1 x M8, 4-pin socket (USB) 1 x M12, 4-pin socket (external illumination control)

Supply voltage	12 V DC ... 24 V DC, ± 20 %
Power consumption	Typ. 10 W, ± 20 %
Output current	≤ 100 mA
Housing	Aluminum die cast
Window material	Plastic
Enclosure rating	IP67 (EN 60529 (1991-10), EN 60529/A2 (2002-02))
Electrical safety	EN 60950-1 (2011-01)
Weight	590 g
Dimensions (L x W x H)	108 mm x 63.1 mm x 96.4 mm

Performance

Readable code structures	1D codes, Stacked, 2D codes
Bar code types	GS1-128 / EAN 128, UPC / GTIN / EAN, Interleaved 2 of 5, Pharmacode, GS1 DataBar, Code 39, Code 128, Codabar, Code 32, Code 93, USPS (Postnet, Planet, USPS4SCB), Australian Post, Dutch KIX Post, Royal Mail, Swedish Post
2D code types	Data Matrix ECC200, GS1 Data-Matrix, MaxiCode, QR code
Stacked code types	PDF417
Code qualification	On the basis of ISO/IEC 16022, ISO/IEC 15415, ISO/IEC 18004

Interfaces

Ethernet	✓, TCP/IP
Function	Data interface (read result output), Service interface, FTP (image transmission)
Data transmission rate	10/100/1,000 Mbit/s
PROFINET	✓
Function	PROFINET Single Port (integrated), PROFINET Dual Port (optional via external connection module CDF600-2)
Data transmission rate	10/100 MBit/s
EtherNet/IP™	✓
Data transmission rate	10/100/1,000 Mbit/s
Serial	✓, RS-232, RS-422
Function	Data interface (read result output), Service interface
Data transmission rate	0.3 kBaud ... 115.2 kBaud, AUX: 57.6 kBaud (RS-232)
CAN	✓
Function	SICK CAN sensor network CSN (CAN controller/CAN device, multiplexer/server)
Data transmission rate	250 kbit/s ... 500 kbit/s
PROFIBUS DP	✓
Type of fieldbus integration	Optional over external fieldbus module CDF600-2
Digital inputs	4 (“Sensor 1”, “Sensor 2”, 2 inputs via optional CMC600 parameter memory in CDB650/CDM420)
Configurable inputs	Encoder input, external trigger
Digital outputs	6 (CDB650: “Result 1”, “Result 2”, “Result 3”, “Result 4”, 2 external outputs via CMC600 or CDM420: “Result 1”, “Result 2”, 2 external outputs via CMC600 or cable with open end: “Result 1”, “Result 2”, “Result 3”, “Result 4”)
Configurable outputs	Good read, External illumination control, free configurable output condition, "device ready"
Reading pulse	Digital inputs, non-powered, serial interface, Ethernet, CAN, auto pulse, presentation mode
Optical indicators	11 LEDs (5 x status display, 5 x LED bar graph, 1 green/red feedback spot)

Acoustic indicators	Beeper (configurable)
Control elements	2 buttons (choose and start/stop functions)
Operator interfaces	Web server
Configuration software	SOPAS ET
Memory card	Micro SD memory card (flash card) max. 32 GB, optional
Data storage and retrieval	Image and data storage via microSD memory card and external FTP
Maximum encoder frequency	1 kHz
External illumination control	Via digital output (max. 24 V trigger) or external illumination connection

Ambient data

Electromagnetic compatibility (EMC)	EN 61000-6-2:2005-08 / EN 61000-6-4 (2007-01) + A1 (2011)
Vibration resistance	EN 60068-2-6:2008-02
Shock resistance	EN 60068-2-27:2009-05
Ambient operating temperature	0 °C ... +50 °C
Storage temperature	–20 °C ... +70 °C
Permissible relative humidity	90 %, Non-condensing

Classifications

ECLASS 5.0	27280103
ECLASS 5.1.4	27280103
ECLASS 6.0	27280103
ECLASS 6.2	27280103
ECLASS 7.0	27280103
ECLASS 8.0	27280103
ECLASS 8.1	27280103
ECLASS 9.0	27280103
ECLASS 10.0	27280103
ECLASS 11.0	27280103
ECLASS 12.0	27280103
ETIM 5.0	EC002550
ETIM 6.0	EC002550
ETIM 7.0	EC002999
ETIM 8.0	EC002999
UNSPSC 16.0901	43211701

Dimensional drawing (Dimensions in mm (inch))

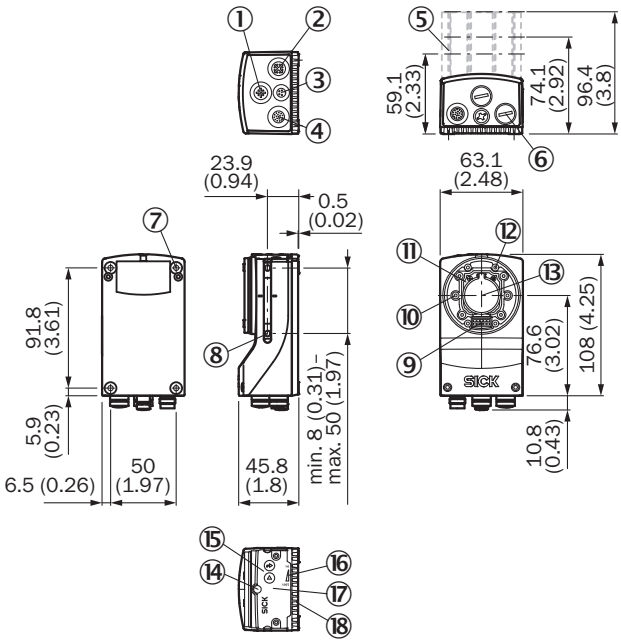

① "External light" connection (external illumination unit, female connector, M12, 4-pin, A-coded)
② "Ethernet" connection (Gigabit Ethernet, female connector, M12, 8-pin, X-coded)
③ "USB" connection (female connector, type M8, 4-pin), for temporary use as a service interface only
④ "Power/Serial Data/CAN/I/O" connection (male connector, M12, 17-pin, A-coded)
⑤ Optics protection hood (length: 22.7 mm, 37.7 mm or 60 mm)
⑥ 4 protective caps for sealing off the electrical connections as required for enclosure rating IP67 (delivery condition)
⑦ 4 tapped blind holes, M5, 5.5 mm deep for mounting the device
⑧ 2 sliding nuts, M5, 5.5 mm deep, as an alternative method of mounting the device
⑨ Connection for an integrable illumination unit (VI55I ring illumination unit)
⑩ 2 laser alignment aids
⑪ S-mount or C-mount optics module
⑫ 4 blind tapped holes, 2.5 mm for mounting the spacers for the integrable illumination (VI55I ring illumination unit)
⑬ Optical axis and center of the image sensor
⑭ Basic device: Manual focus screw for an S-mount lens, accessible via the round opening in the housing cover. To secure the focus setting, cover the round opening with a self-adhesive label. Complete device: The opening is already covered by a label.
⑮ 2 function keys
⑯ 5 bar graph LEDs
⑰ Hinged cover on the top side of the device, access to the microSD memory card and the manual focus screw (S-mount)
⑱ 5 status LEDs (2 levels)

Field of view

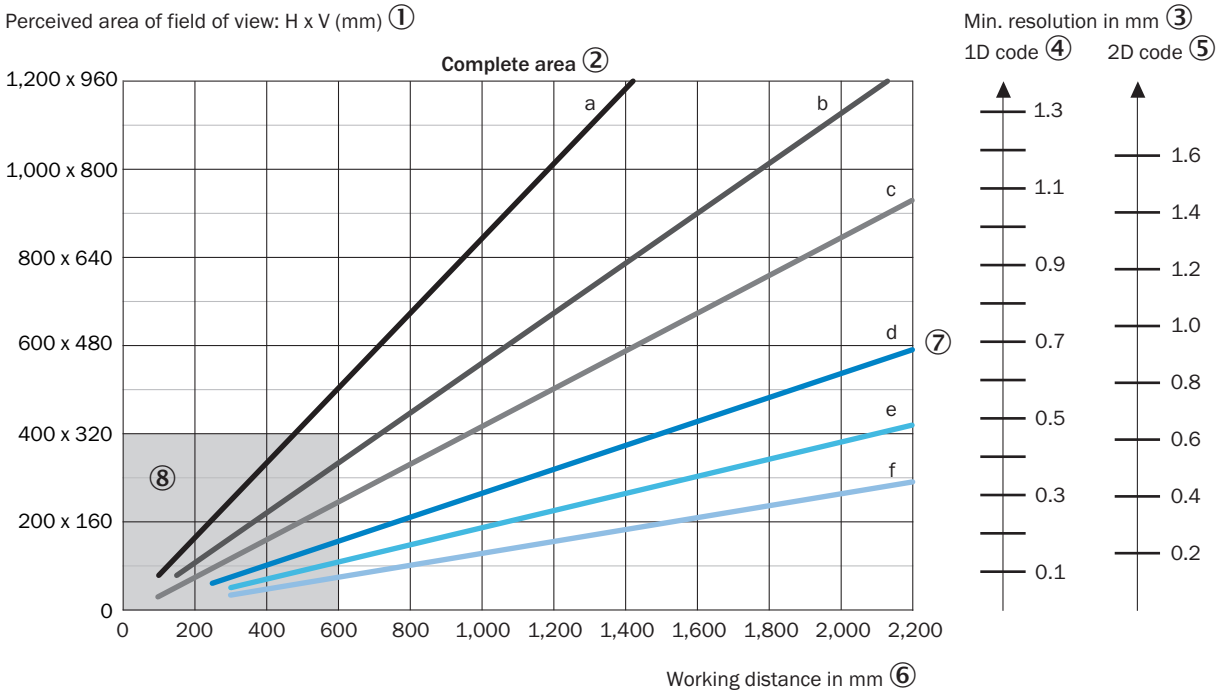

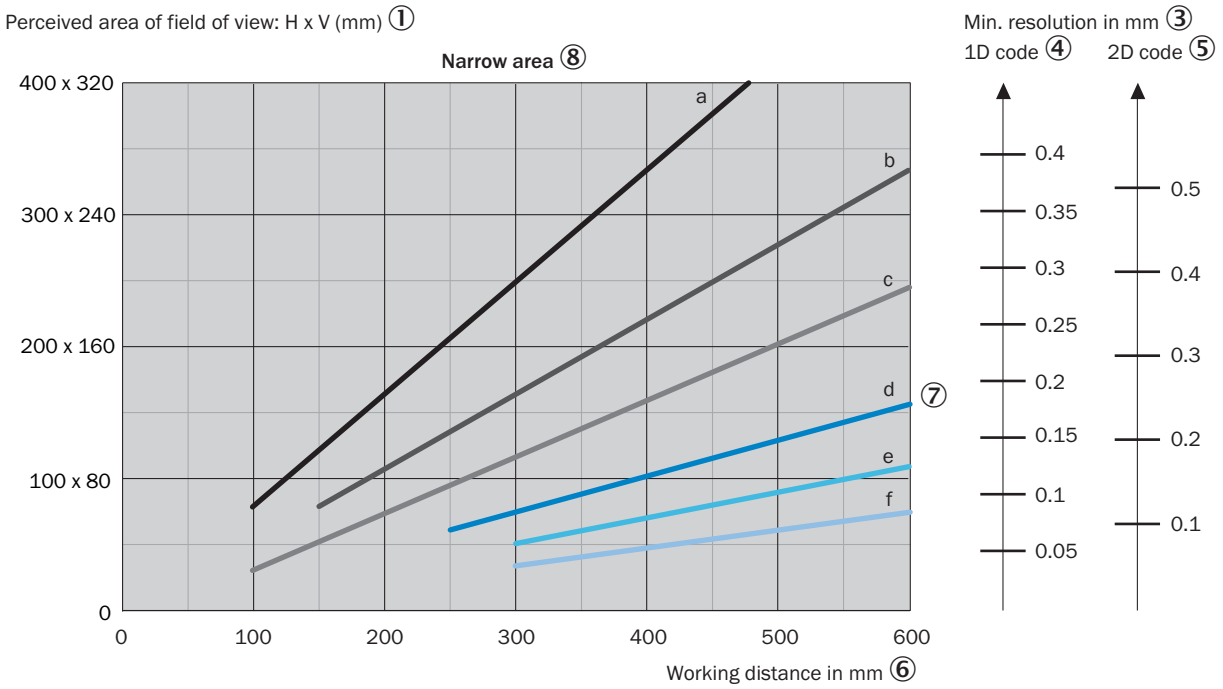

- a: f = 8.0 mm (C-mount standard only) ⑨
- b: f = 12.0 mm
- c: f = 16.0 mm
- d: f = 25.0 mm
- e: f = 35.0 mm
- f: f = 50.0 mm

For S-mount and standard C-mount lenses, spacer rings are needed for working distances shorter than approximately 10 times the focal length. For compact C-mount lenses, spacer rings are not needed, but the built-in illumination cannot be used for distances shorter than 300 mm.

① Perceived field of view area: horizontal x vertical (mm)

② Complete area
③ Minimum resolution in mm
④ 1D code
⑤ 2D code
⑥ Working distance in mm
⑦ Focal length of lens, here example for f = 25.0 mm
⑧ Close range
⑨ Standard C-mount only

Selection Guide

Lector63x Compact C-mount

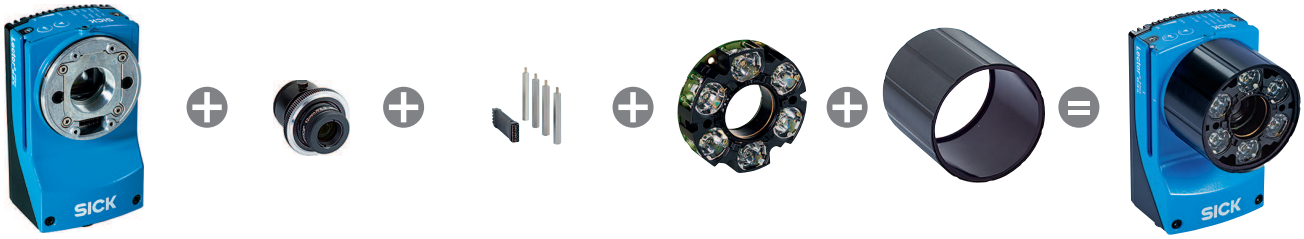

Body, incl. C-mount module	Compact C-mount lens	Spacer screws and illumination connector	Integratable illumination	Lens protective hood	Assembled device, incl. all mentioned parts
Lector631 V2D631R-MXCXB0 1078473	Focal length **12 mm** Aperture **F8** 2079348	**Medium – 15 mm** 2079501	**Medium, white** 2078430	**Medium – 37.7 mm** 2079127	**Lector631, 12 mm, F8, white** V2D631R-MKMDB4 1080075
Lector632 V2D632R-MXCXB0 1075881					**Lector632, 12 mm, F8, white** V2D632R-MKMDB4 1074079
Lector631 V2D631D-MXCXB0 1082394			**Medium, red** 2098650	**Medium – 37.7 mm** 2079127	
Lector632 V2D632D-MXCXB0 1082396			**Medium, blue** 2083814	**Medium – 37.7 mm** 2079127	
			Wide, IR 2101371	**Medium – 37.7 mm** 2092590	
	Focal length **16 mm** Aperture **F8** 2079346	**Long – 37 mm** 2079502	**Medium, white** 2078430	**Long – 60 mm** 2079204	**Lector631, 16 mm, F8, white** V2D631R-MKMEB1 1080076
					Lector632, 16 mm, F8, white V2D632R-MKMEB1 1074080
			Medium, red 2098650	**Long – 60 mm** 2079204	
			Medium, blue 2083814	**Long – 60 mm** 2079204	
			Medium, IR 2098834	**Long – 60 mm** 2092592	
	Focal length **25 mm** Aperture **F8** 2079343	**Medium – 15 mm** 2079501	**Narrow, white** 2078431	**Medium – 37.7 mm** 2079127	**Lector631, 25 mm, F8, white** V2D631R-MWMFB4 1080077
					Lector632, 25 mm, F8, white V2D632R-MWMFB4 1074081
			Narrow, red 2084247	**Medium – 37.7 mm** 2079127	
			Narrow, blue 2083812	**Medium – 37.7 mm** 2079127	
	Focal length **35 mm** Aperture **F8** 2079344	**Long – 37 mm** 2079502	**Narrow, white** 2078431	**Long – 60 mm** 2079204	**Lector631, 35 mm, F8, white** V2D631R-MWMGB1 1080078
					Lector632, 35 mm, F8, white V2D632R-MWMGB1 1074082
			Narrow, red 2084247	**Long – 60 mm** 2079204	
			Narrow, blue 2083812	**Long – 60 mm** 2079204	

Body, incl. C-mount module | C-mount lens | Mounting bracket | External illumination | Lens protective hood | Assembled device, incl. all ICL parts

Lector631
V2D631R-MXCXB0
1078473

Lector632
V2D632R-MXCXB0
1075881

Lector631
V2D631D-MXCXB0
1082394

Lector632
V2D632D-MXCXB0
1082396

Focal length **8 mm**
Aperture **F1.4–16**
5325091

Focal length **12 mm**
Aperture **F1.4–16**
5325403

An external, application-specific illumination is required

Medium – 37.7mm
2079127

Long – 60 mm
2079204

Focal length **16 mm**
Aperture **F1.4–16**
5325404

Bracket for ICL mounting
2081187

ICL280, **red**
1052472

ICL280, **infrared**
1057645

Focal length **25 mm**
Aperture **F1.4–16**
5325405

Bracket for ICL mounting
2081187

ICL260, **red**
1052495

ICL280, **infrared**
1057645

Focal length **35 mm**
Aperture **F1.4–16**
5325406

Bracket for ICL mounting
2081187

ICL300, **red**
1046820

ICL300, **infrared**
1047957

Focal length **50 mm**
Aperture **F1.4–16**
5325407

Bracket for ICL mounting
2081187

ICL300, **red**
1046820

ICL300, **infrared**
1047957

Hood to be used with ICL illumination
2081544

Exploded view

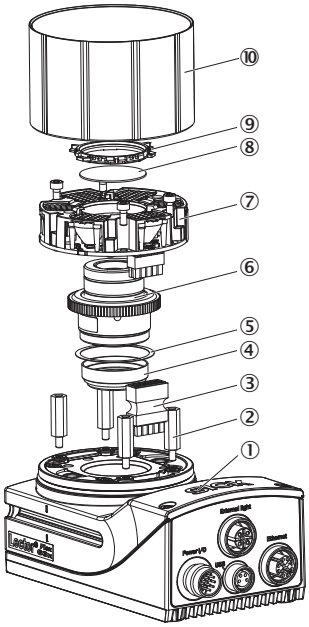

① Camera housing
② Spacer for built-in illumination
③ Plug connector for illumination
④ Optical filter (optional)
⑤ Spacer disk (included with delivery of filter)
⑥ Compact C-mount lens
⑦ Built-in illumination
⑧ C-mount filter (optional), cannot be used with 15 mm lenses (2080213)
⑨ Filter holder
⑩ Optics protection hood

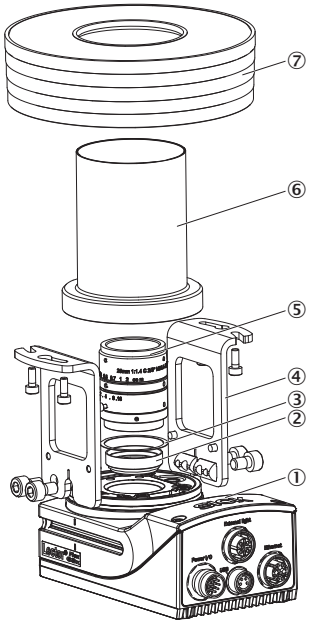

① Camera housing
② C-mount filter (optional)
③ Spacer disk (included with delivery of filter)
④ C-mount lens
⑤ Mounting bracket for ICL ring lighting
⑥ Optics protection hood for ICL ring lighting
⑦ ICL ring lighting

Recommended accessories

Other models and accessories ➜ www.sick.com/Lector63x

	Brief description	Type	Part no.
Mounting brackets and plates			
	Mounting bracket with screws, L-shaped for mounting with sliding nuts, includes angle indicator for adjusting the tilt angle	Mounting bracket	2078970
Plug connectors and cables			
	• **Connection type head A:** Female connector, M12, 17-pin, straight, A-coded • **Connection type head B:** Male connector, M12, 17-pin, straight, A-coded • **Signal type:** Power, serial, CAN, digital I/Os • **Cable:** 2 m, suitable for refrigeration • **Description:** Power, serial, CAN, digital I/Os, suitable for 2 A, shielded	YM2A8D-020XXXF2A8D	6053230
	• **Connection type head A:** Male connector, M12, 8-pin, straight, X-coded • **Connection type head B:** Male connector, RJ45, 8-pin, straight • **Signal type:** Ethernet, Gigabit Ethernet • **Cable:** 2 m, 8-wire, PUR, halogen-free • **Description:** Ethernet, Gigabit Ethernet, shielded • **Application:** Zones with oils and lubricants	YM2X18-020EG1MRJA8	2106258

	Brief description	Type	Part no.
Modules			
	• **Sub product family:** CDB650 • **Supported products:** Lector® series, CLV62x - CLV64x (depending on type), CLV69x, RFID read/write device, InspectorP series • **Brief description:** Connection device basic for connecting one sensor with 2 A fuse, 5 cable glands and RS-232 interface to sensor via M12, 17-pin female connector, all outputs available on screw/spring-loaded terminals.	CDB650-204	1064114

Recommended services

Additional services ➜ www.sick.com/Lector63x

	Type	Part no.
Performance check		
• **Product area:** Image-based code readers • **Range of services:** Inspection of defined functions, e.g., reading performance • **Travel expenses:** The prices do not include travel costs such as hotel, flight, travel time and expenses. • **Duration:** Additional work will be invoiced separately	Performance check Lector	1608207
Maintenance		
• **Product area:** Image-based code readers • **Range of services:** Inspection, analysis and restoring of defined functions, Inspection and adaptation of previously defined functions of possible Lector6xx illumination, code configuration, trigger and digital inputs, interfaces and digital outputs as well as data processing • **Duration:** Additional work will be invoiced separately • **Travel expenses:** The prices do not include travel costs such as hotel, flight, travel time and expenses.	Maintenance Lector	1611421
Commissioning		
• **Product area:** Image-based code readers • **Range of services:** Inspection of connection, fine adjustment, optimization of parameters of SICK product as well as tests, Set-up of previously defined functions of possible illumination, code configuration, trigger and digital inputs, interfaces and digital outputs as well as data processing • **Travel expenses:** The prices do not include travel costs such as hotel, flight, travel time and expenses. • **Duration:** Additional work will be invoiced separately	Commissioning Lector	1608206
Extended warranty		
• **Product area:** Identification solutions, machine vision, Detection and ranging solutions, safety camera sensors, Safety laser scanners, Safety radar sensors • **Range of services:** The services correspond to the scope of the statutory manufacturer warranty (SICK general terms of delivery). • **Duration:** Five-year warranty from delivery date.	Extended warranty for a total of five years from delivery date	1680671

SICK AT A GLANCE

SICK is one of the leading manufacturers of intelligent sensors and sensor solutions for industrial applications. A unique range of products and services creates the perfect basis for controlling processes securely and efficiently, protecting individuals from accidents and preventing damage to the environment.

We have extensive experience in a wide range of industries and understand their processes and requirements. With intelligent sensors, we can deliver exactly what our customers need. In application centers in Europe, Asia and North America, system solutions are tested and optimized in accordance with customer specifications. All this makes us a reliable supplier and development partner.

Comprehensive services complete our offering: SICK LifeTime Services provide support throughout the machine life cycle and ensure safety and productivity.

For us, that is "Sensor Intelligence."

WORLDWIDE PRESENCE:

Contacts and other locations –www.sick.com

SICK
Sensor Intelligence.