Product data sheet

IHM06-02BPSVT0G

IMM

INDUCTIVE PROXIMITY SENSORS

SICK
Sensor Intelligence.

Illustration may differ

Ordering information

Type	Part no.
IHM06-02BPSVT0G	1101121

Other models and accessories ➜ www.sick.com/IMM

Detailed technical data

Features

Housing	Cylindrical smooth housing
Housing	Extremely short model
Diameter	Ø 6.5 mm
Sensing range S_n	2 mm
Safe sensing range S_a	1.62 mm
Installation type	Flush
Switching frequency	5,000 Hz
Connection type	Connector M8, 3-pin
Switching output	PNP
Output function	NO
Electrical wiring	DC 3-wire
Enclosure rating	IP67 [1]
Special features	Visual adjustment indicator, IO-Link

[1] According to EN 60529.

Mechanics/electronics

Supply voltage	10 V DC ... 30 V DC
Ripple	≤ 20 % [1]
Voltage drop	≤ 2 V [2]
Time delay before availability	≤ 50 ms

[1] Of V_S.
[2] With Ia = 200 mA.
[3] Supply voltage U_B and constant ambient temperature Ta.

Hysteresis	1 % ... 10 %
Reproducibility	≤ 2 % [3]
Temperature drift (of S_r)	≤ 10 %
EMC	EN 60947-5-2
Continuous current I_a	≤ 200 mA
Short-circuit protection	✓
Reverse polarity protection	✓
Power-up pulse protection	✓
Shock and vibration resistance	30 g, 11 ms / 10 ... 55 Hz, 1 mm
Ambient operating temperature	–25 °C ... +70 °C
Housing material	Stainless steel V2A, DIN 1.4305 / AISI 303
Sensing face material	Plastic, LCP
Housing length	29 mm
UL File No.	NRKH.E348498

[1] Of V_S.
[2] With Ia = 200 mA.
[3] Supply voltage U_B and constant ambient temperature Ta.

Safety-related parameters

$MTTF_D$	1,330 years
DC_{avg}	0 %

Communication interface

Communication interface	IO-Link V1.1
Communication Interface detail	COM2 (38,4 kBaud)
Cycle time	10.4 ms
Process data length	1 Byte
Process data structure	Bit 0 = Sr reached Bit 1 = Sa reached

Reduction factors

Note	The values are reference values which may vary
St37 steel (Fe)	1
Stainless steel (V2A, 304)	Approx. 0.75
Aluminum (Al)	Approx. 0.5
Copper (Cu)	Approx. 0.43
Brass (Br)	Approx. 0.54

Installation note

Remark	Associated graphic see "Installation"
B	6 mm
C	6.5 mm
D	6 mm
F	16 mm

Classifications

ECLASS 5.0	27270101
ECLASS 5.1.4	27270101
ECLASS 6.0	27270101
ECLASS 6.2	27270101
ECLASS 7.0	27270101
ECLASS 8.0	27270101
ECLASS 8.1	27270101
ECLASS 9.0	27270101
ECLASS 10.0	27270101
ECLASS 11.0	27270101
ECLASS 12.0	27274001
ETIM 5.0	EC002714
ETIM 6.0	EC002714
ETIM 7.0	EC002714
ETIM 8.0	EC002714
UNSPSC 16.0901	39122230

Adjustments

Installation aid

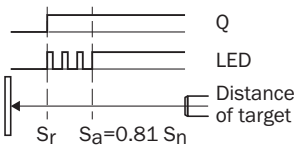

Installation note

Fixing with setscrew

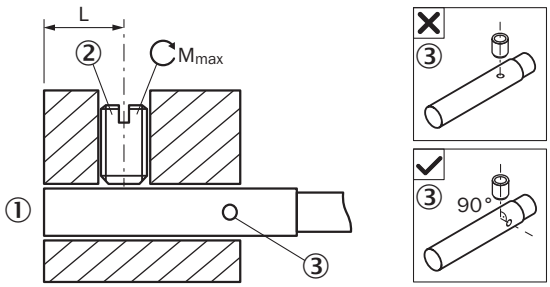

① Sensing face
② Recommended setscrew: M3, flat point
③ Display LED

Sensor type	Mounting area (L)	Max. tightening torque (M_{max})
IHM06-********G	6 mm ... 11 mm	≤ 0.4 Nm
IHM06-******T0G	6 mm ... 21 mm	≤ 0.4 Nm

Sensor type	Mounting area (L)	Max. tightening torque (M_{max})
IHM06-********K	6 mm ... 21 mm	≤ 0.4 Nm
IHM06-******T0K	6 mm ... 32 mm	≤ 0.4 Nm
IHM06-********S	6 mm ... 32 mm	≤ 0.4 Nm
IHM06-******T0S	6 mm ... 42 mm	≤ 0.4 Nm

Mounting using BEF-KH-M06 bracket

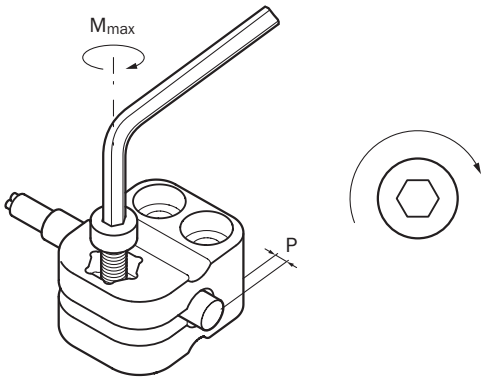

Sensor type	Mounting adapter	Overrun (P)	Max. tightening torque (M_{max})
IHM06-1B5****** IHM06-02B****** IHM06-03B******	BEF-KH-M06, part no. 2101067	≥ 0 mm	≤ 0.6 Nm

Flush installation

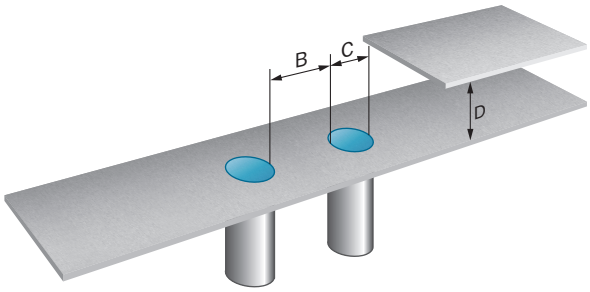

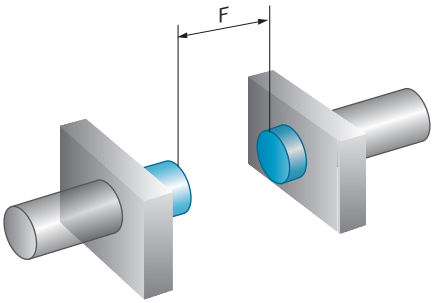

Connection diagram

Cd-002

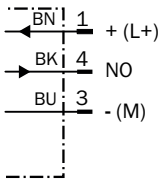

Response diagram

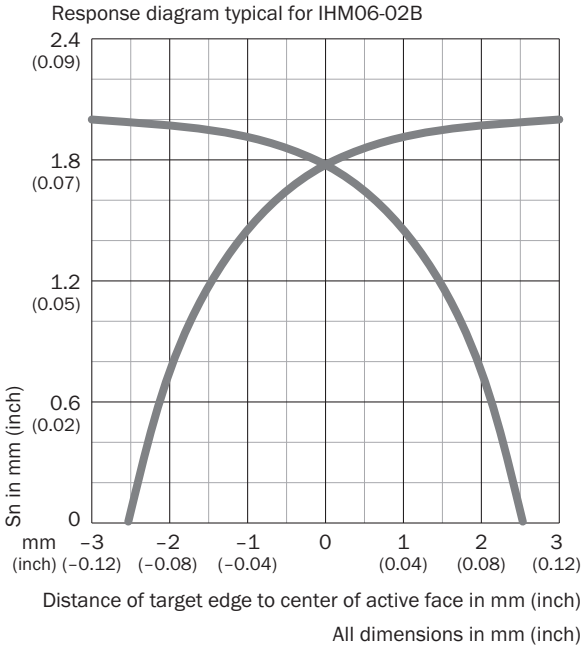

Dimensional drawing (Dimensions in mm (inch))

IHM06, extremely short variant, flush, male connector

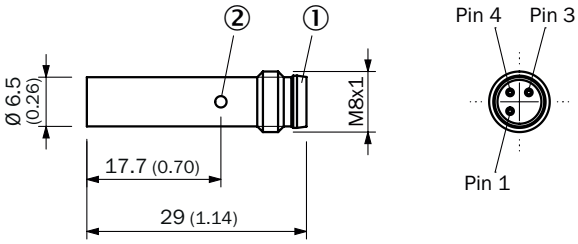

① Connection
② Function indicator

Recommended accessories

Other models and accessories ➔ www.sick.com/IMM

	Brief description	Type	Part no.
Plug connectors and cables			
	• **Connection type head A:** Male connector, M8, 3-pin, straight • **Description:** Unshielded • **Connection systems:** Screw-type terminals • **Permitted cross-section:** 0.14 mm² ... 0.5 mm²	STE-0803-G	6037322

	Brief description	Type	Part no.
	• **Connection type head A:** Male connector, M8, 3-pin, angled • **Description:** Unshielded • **Connection systems:** Screw-type terminals • **Permitted cross-section:** 0.14 mm² ... 0.5 mm²	STE-0803-WSK	6053170
Terminal and alignment brackets			
	Plastic (PA6), without mounting hardware	BEF-KH-M06	2101067
Others			
	• **Connection type head A:** 3-pin • **Slot connection type:** M8, 3-pin, A-coded, female connector • **Description:** Unshielded • **Items supplied:** 5 x labeling plates	Y8A34A2-C2A8000XXX	2115733
		Y8A36A2-C2A8000XXX	2115734
	• **Connection type head A:** 3-pin • **Slot connection type:** M8, 3-pin, A-coded, female connector • **Cable:** 5 m, 6-wire, PUR, halogen-free • **Description:** Unshielded • **Application:** Drag chain operation • **Items supplied:** 5 x labeling plates	Y8A34A2-LXXXUAA050	2115727
	• **Connection type head A:** 3-pin • **Slot connection type:** M8, 3-pin, A-coded, female connector • **Cable:** 5 m, 8-wire, PUR, halogen-free • **Description:** Unshielded • **Application:** Drag chain operation • **Items supplied:** 5 x labeling plates	Y8A36A2-LXXXUBA050	2115728
	• **Connection type head A:** Female connector, M8, 3-pin, straight, A-coded • **Connection type head B:** Flying leads • **Signal type:** Sensor/actuator cable • **Cable:** 2 m, 3-wire, PUR, halogen-free • **Description:** Sensor/actuator cable, unshielded • **Application:** Zones with oils and lubricants, Drag chain operation, Robot	YF8U13-020UA1XLEAX	2094782
	• **Connection type head A:** Female connector, M8, 3-pin, straight, A-coded • **Connection type head B:** Flying leads • **Signal type:** Sensor/actuator cable • **Cable:** 5 m, 3-wire, PUR, halogen-free • **Description:** Sensor/actuator cable, unshielded • **Application:** Zones with oils and lubricants, Drag chain operation, Robot	YF8U13-050UA1XLEAX	2094788
	• **Connection type head A:** Female connector, M8, 3-pin, straight, A-coded • **Connection type head B:** Flying leads • **Signal type:** Sensor/actuator cable • **Cable:** 2 m, 3-wire, PVC • **Description:** Sensor/actuator cable, unshielded • **Application:** Zones with chemicals	YF8U13-020VA1XLEAX	2095860
	• **Connection type head A:** Female connector, M8, 3-pin, straight, A-coded • **Connection type head B:** Flying leads • **Signal type:** Sensor/actuator cable • **Cable:** 5 m, 3-wire, PVC • **Description:** Sensor/actuator cable, unshielded • **Application:** Zones with chemicals	YF8U13-050VA1XLEAX	2095884
	• **Connection type head A:** Female connector, M8, 3-pin, angled, A-coded • **Connection type head B:** Flying leads • **Signal type:** Sensor/actuator cable • **Cable:** 2 m, 3-wire, PUR, halogen-free • **Description:** Sensor/actuator cable, unshielded • **Application:** Zones with oils and lubricants, Drag chain operation, Robot	YG8U13-020UA1XLEAX	2094794

	Brief description	Type	Part no.
	• **Connection type head A:** Female connector, M8, 3-pin, angled, A-coded • **Connection type head B:** Flying leads • **Signal type:** Sensor/actuator cable • **Cable:** 5 m, 3-wire, PUR, halogen-free • **Description:** Sensor/actuator cable, unshielded • **Application:** Zones with oils and lubricants, Drag chain operation, Robot	YG8U13-050UA1XLEAX	2095586
	• **Connection type head A:** Female connector, M8, 3-pin, angled, A-coded • **Connection type head B:** Flying leads • **Signal type:** Sensor/actuator cable • **Cable:** 2 m, 3-wire, PVC • **Description:** Sensor/actuator cable, unshielded • **Application:** Zones with chemicals	YG8U13-020VA1XLEAX	2096165
	• **Connection type head A:** Female connector, M8, 3-pin, angled, A-coded • **Connection type head B:** Flying leads • **Signal type:** Sensor/actuator cable • **Cable:** 5 m, 3-wire, PVC • **Description:** Sensor/actuator cable, unshielded • **Application:** Zones with chemicals	YG8U13-050VA1XLEAX	2096166
	• **Connection type head A:** Female connector, M8, 3-pin, straight, A-coded • **Connection type head B:** Male connector, M12, 3-pin, straight, A-coded • **Signal type:** Sensor/actuator cable • **Cable:** 2 m, 3-wire, PUR, halogen-free • **Description:** Sensor/actuator cable, unshielded • **Application:** Zones with oils and lubricants, Drag chain operation, Robot	YF8U13-020UA1M2A13	2096169
	• **Connection type head A:** Female connector, M8, 3-pin, straight, A-coded • **Connection type head B:** Male connector, M12, 3-pin, straight, A-coded • **Signal type:** Sensor/actuator cable • **Cable:** 5 m, 3-wire, PUR, halogen-free • **Description:** Sensor/actuator cable, unshielded • **Application:** Zones with oils and lubricants, Drag chain operation, Robot	YF8U13-050UA1M2A13	2096170
	• **Connection type head A:** Female connector, M8, 3-pin, straight, A-coded • **Connection type head B:** Male connector, M12, 3-pin, straight, A-coded • **Signal type:** Sensor/actuator cable • **Cable:** 2 m, 3-wire, PVC • **Description:** Sensor/actuator cable, unshielded • **Application:** Zones with chemicals	YF8U13-020VA1M2A13	2096605
	• **Connection type head A:** Female connector, M8, 3-pin, straight, A-coded • **Connection type head B:** Male connector, M12, 3-pin, straight, A-coded • **Signal type:** Sensor/actuator cable • **Cable:** 5 m, 3-wire, PVC • **Description:** Sensor/actuator cable, unshielded • **Application:** Zones with chemicals	YF8U13-050VA1M2A13	2096606
	• **Connection type head A:** Female connector, M8, 3-pin, angled, A-coded • **Connection type head B:** Male connector, M12, 3-pin, straight, A-coded • **Signal type:** Sensor/actuator cable • **Cable:** 2 m, 3-wire, PUR, halogen-free • **Description:** Sensor/actuator cable, unshielded • **Application:** Zones with oils and lubricants, Drag chain operation, Robot	YG8U13-020UA1M2A13	2095748
	• **Connection type head A:** Female connector, M8, 3-pin, straight, A-coded • **Connection type head B:** Male connector, M8, 3-pin, straight, A-coded • **Signal type:** Sensor/actuator cable • **Cable:** 2 m, 3-wire, PUR, halogen-free • **Description:** Sensor/actuator cable, unshielded • **Application:** Zones with oils and lubricants, Drag chain operation, Robot	YF8U13-020UA1M8U13	2096304
	• **Connection type head A:** Female connector, M8, 3-pin, straight, A-coded • **Connection type head B:** Male connector, M8, 3-pin, straight, A-coded • **Signal type:** Sensor/actuator cable • **Cable:** 5 m, 3-wire, PUR, halogen-free • **Description:** Sensor/actuator cable, unshielded • **Application:** Zones with oils and lubricants, Drag chain operation, Robot	YF8U13-050UA1M8U13	2096308

	Brief description	Type	Part no.
	• **Connection type head A:** Female connector, M8, 3-pin, angled, A-coded • **Connection type head B:** Male connector, M8, 3-pin, straight, A-coded • **Signal type:** Sensor/actuator cable • **Cable:** 2 m, 3-wire, PUR, halogen-free • **Description:** Sensor/actuator cable, unshielded • **Application:** Zones with oils and lubricants, Drag chain operation, Robot	YG8U13-020UA1M8U13	2107781
	• **Connection type head A:** Female connector, M8, 3-pin, angled, A-coded • **Connection type head B:** Male connector, M12, 3-pin, straight, A-coded • **Signal type:** Sensor/actuator cable • **Cable:** 5 m, 3-wire, PUR, halogen-free • **Description:** Sensor/actuator cable, unshielded • **Application:** Zones with oils and lubricants, Drag chain operation, Robot	YG8U13-050UA1M2A13	2122842

SICK AT A GLANCE

SICK is one of the leading manufacturers of intelligent sensors and sensor solutions for industrial applications. A unique range of products and services creates the perfect basis for controlling processes securely and efficiently, protecting individuals from accidents and preventing damage to the environment.

We have extensive experience in a wide range of industries and understand their processes and requirements. With intelligent sensors, we can deliver exactly what our customers need. In application centers in Europe, Asia and North America, system solutions are tested and optimized in accordance with customer specifications. All this makes us a reliable supplier and development partner.

Comprehensive services complete our offering: SICK LifeTime Services provide support throughout the machine life cycle and ensure safety and productivity.

For us, that is "Sensor Intelligence."

WORLDWIDE PRESENCE:

Contacts and other locations –www.sick.com

SICK
Sensor Intelligence.