Product data sheet

WL12G-3V2572S02

W12G

SMALL PHOTOELECTRIC SENSORS

SICK
Sensor Intelligence.

Illustration may differ

Ordering information

Type	Part no.
WL12G-3V2572S02	1053541

Other models and accessories ➜ www.sick.com/W12G

Detailed technical data

Features

Functional principle	Photoelectric retro-reflective sensor
Functional principle detail	Autocollimation
Sensing range max.	0 m ... 4 m [1]
Polarisation filters	Yes
Emitted beam	
Light source	PinPoint LED [2]
Type of light	Visible red light
Light spot size (distance)	Ø 25 mm (1.5 m)
Key LED figures	
Wave length	660 nm
Adjustment	Single teach-in button
Special applications	Detecting transparent objects
AutoAdapt	✓

[1] Reflector PL80A.
[2] Average service life: 100,000 h at T_U = +25 °C.

Electrical data

Supply voltage U_B	10 V DC ... 30 V DC [1]
Ripple	< 5 V_{pp} [2]
Current consumption	40 mA [3]
Protection class	III
Digital output	
Type	PNP
Switching mode	Light/dark switching
Signal voltage PNP HIGH/LOW	Approx. V_S – 2.5 V / 0 V
Output current $I_{max.}$	≤ 100 mA
Response time	≤ 333 µs [4]
Switching frequency	1,500 Hz [5]
Circuit protection	A [6] B [7] C [8] D [9]
Special feature	Detecting transparent objects
Operating mode	Mode I, 6 % attenuation, Mode II, 12 % attenuation
Plausibility output, stable detection	Approx. 0 V
Plausibility output, unstable detection	V_S - 2.5 V

[1] Limit values when operated in short-circuit protected network: max. 8 A.
[2] May not exceed or fall below U_V tolerances.
[3] Without load.
[4] Signal transit time with resistive load.
[5] With light/dark ratio 1:1.
[6] A = V_S connections reverse-polarity protected.
[7] B = inputs and output reverse-polarity protected.
[8] C = interference suppression.
[9] D = outputs overcurrent and short-circuit protected.

Mechanical data

Housing	Rectangular
Dimensions (W x H x D)	15.5 mm x 48.5 mm x 42 mm
Connection	Male connector M12, 5-pin
Material	
Housing	Metal, zinc diecast
Front screen	Plastic, PMMA
Weight	120 g

Ambient data

Enclosure rating	IP66 IP67
Ambient operating temperature	–40 °C ... +60 °C
Ambient temperature, storage	–40 °C ... +75 °C
UL File No.	NRKH.E181493 & NRKH7.E181493

Classifications

ECLASS 5.0	27270902
ECLASS 5.1.4	27270902
ECLASS 6.0	27270902
ECLASS 6.2	27270902
ECLASS 7.0	27270902
ECLASS 8.0	27270902
ECLASS 8.1	27270902
ECLASS 9.0	27270902
ECLASS 10.0	27270902
ECLASS 11.0	27270902
ECLASS 12.0	27270902
ETIM 5.0	EC002717
ETIM 6.0	EC002717
ETIM 7.0	EC002717
ETIM 8.0	EC002717
UNSPSC 16.0901	39121528

Adjustments

Teach-in

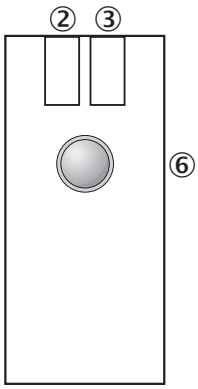

② LED indicator yellow: Status of received light beam
③ Green LED indicator: power on, teach-in mode IBlue LED indicator: teach-in mode II
⑥ Single teach-in button, Function 1: teach-in sensitivity on reflector, Function 2: change operation/teach-in mode

Connection diagram

Cd-147

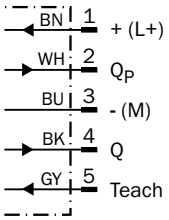

Light spot size

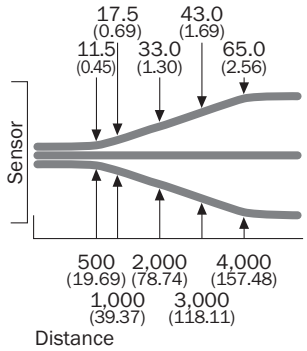

All dimensions in mm (inch)

Sensing range diagram

WL12G-3

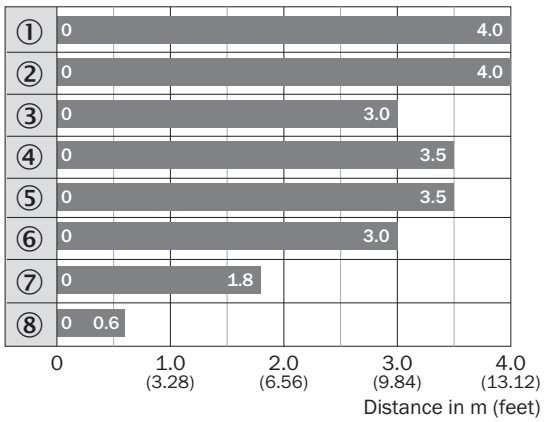

Sensing range max.

① Reflector PL80A
② Reflector C110A
③ Reflector P250F
④ Reflector PL50A
⑤ Reflector PL40A
⑥ Reflector PL30A
⑦ Reflector PL20A
⑧ Reflective tape REF-IRF-56

Functions

Teach-in-Modus für Objekte / *Teach-in mode for objects*	Lichtdämpfung /	Objekttyp /	Teach-in-Zeit / *Teach-in time*	Ext. Teach-in über Leitung / *Ext. cable teach-in*	Anzeige-LED / *LED indicator*
I	10 %	PET-Flasche / Folie /Glas / *PET-Flasche / Folie/ glas*	1 ... 5 s	30 ... 100 ms	grün / green
II	18 %	Farbglasflaschen/ Colored glass bottles	5 ... 10 s	100 ... 200 ms	blau / blue

Dimensional drawing (Dimensions in mm (inch))

WL12-3, WSE12-3

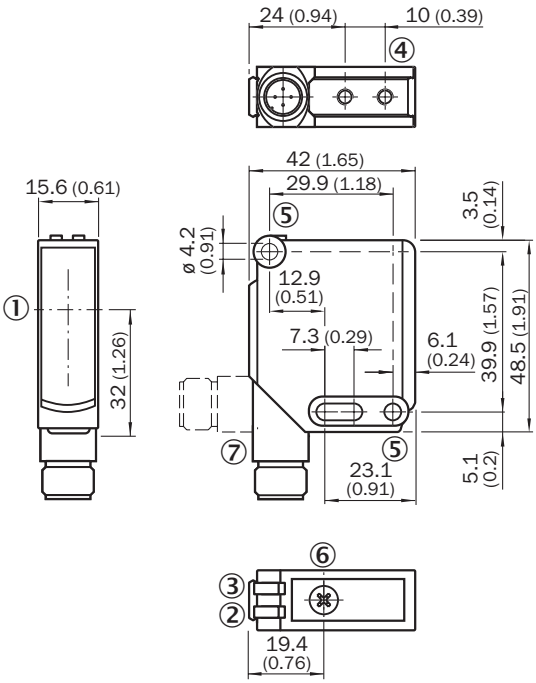

① Optical axis
② LED indicator yellow: Status of received light beam
③ LED indicator green: Supply voltage active
④ M4 threaded mounting hole, 4 mm deep
⑤ Mounting hole, Ø 4.2 mm
⑥ Sensitivity control: potentiometer
⑦ Connection

Recommended accessories

Other models and accessories ➜ www.sick.com/W12G

	Brief description	Type	Part no.
Mounting brackets and plates			
	Universal mounting bracket for reflectors, steel, zinc coated	BEF-WN-REFX	2064574

	Brief description	Type	Part no.
Reflectors			
	Fine triple reflector, screw connection, suitable for laser sensors, 52 mm x 62 mm, PMMA/ABS, Screw-on, 2 hole mounting	P250F	5308843

SICK AT A GLANCE

SICK is one of the leading manufacturers of intelligent sensors and sensor solutions for industrial applications. A unique range of products and services creates the perfect basis for controlling processes securely and efficiently, protecting individuals from accidents and preventing damage to the environment.

We have extensive experience in a wide range of industries and understand their processes and requirements. With intelligent sensors, we can deliver exactly what our customers need. In application centers in Europe, Asia and North America, system solutions are tested and optimized in accordance with customer specifications. All this makes us a reliable supplier and development partner.

Comprehensive services complete our offering: SICK LifeTime Services provide support throughout the machine life cycle and ensure safety and productivity.

For us, that is "Sensor Intelligence."

WORLDWIDE PRESENCE:

Contacts and other locations –www.sick.com

SICK
Sensor Intelligence.