Product data sheet

WTB4-3P2100S13

Safeguard Detector

SAFETY SYSTEMS FOR AUTOMATING MATERIAL FLOWS

SICK
Sensor Intelligence.

Ordering information

Type	Part no.
WTB4-3P2100S13	1075282

Other models and accessories ➜ www.sick.com/Safeguard_Detector

Detailed technical data

Classifications

eCl@ss 5.0	27279090
eCl@ss 5.1.4	27279090
eCl@ss 6.0	27279090
eCl@ss 6.2	27279090
eCl@ss 7.0	27279090
eCl@ss 8.0	27279090
eCl@ss 8.1	27279090
eCl@ss 9.0	27279090
eCl@ss 10.0	27279090
eCl@ss 11.0	27279090
eCl@ss 12.0	27279090
ETIM 5.0	EC001449
ETIM 6.0	EC001449
ETIM 7.0	EC001449
ETIM 8.0	EC001449
UNSPSC 16.0901	32151705

Dimensional drawing (Dimensions in mm (inch))

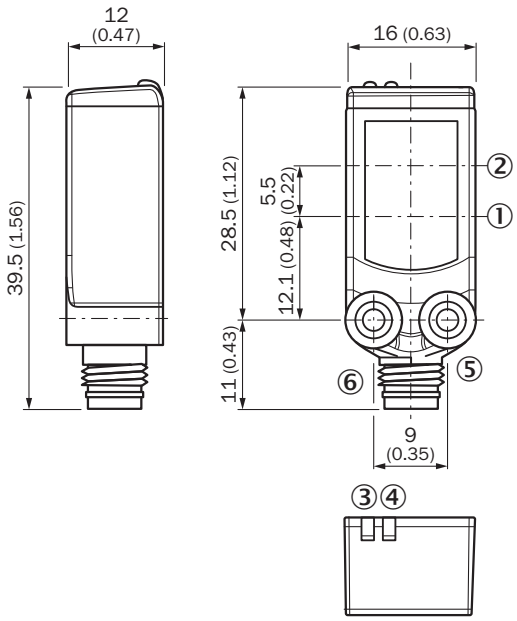

SICK AT A GLANCE

SICK is one of the leading manufacturers of intelligent sensors and sensor solutions for industrial applications. A unique range of products and services creates the perfect basis for controlling processes securely and efficiently, protecting individuals from accidents and preventing damage to the environment.

We have extensive experience in a wide range of industries and understand their processes and requirements. With intelligent sensors, we can deliver exactly what our customers need. In application centers in Europe, Asia and North America, system solutions are tested and optimized in accordance with customer specifications. All this makes us a reliable supplier and development partner.

Comprehensive services complete our offering: SICK LifeTime Services provide support throughout the machine life cycle and ensure safety and productivity.

For us, that is "Sensor Intelligence."

WORLDWIDE PRESENCE:

Contacts and other locations –www.sick.com

SICK
Sensor Intelligence.