Product data sheet

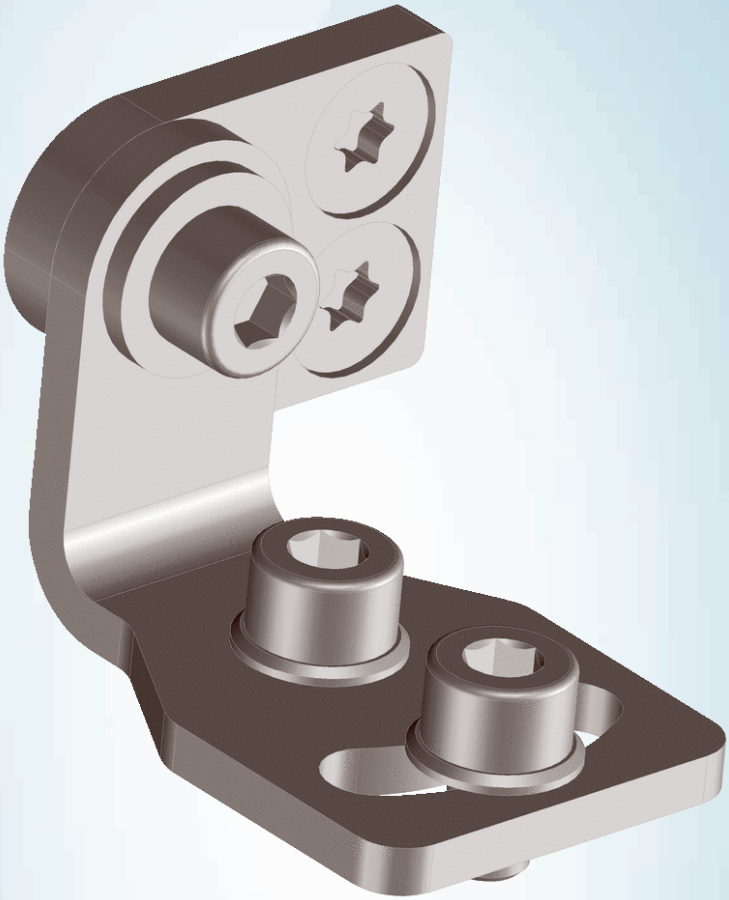

Mounting bracket

SICK
Sensor Intelligence.

Ordering information

Type	Part no.
Mounting bracket	2042902

Other models and accessories ➜ www.sick.com/

Detailed technical data

Technical specifications

Accessory group	Mounting brackets and plates
Accessory family	Mounting brackets
Description	Bracket with adapter board

Classifications

eCl@ss 5.0	27279202
eCl@ss 5.1.4	27279202
eCl@ss 6.0	27279202
eCl@ss 6.2	27279202
eCl@ss 7.0	27279202
eCl@ss 8.0	27279202
eCl@ss 8.1	27279202
eCl@ss 9.0	27273701
eCl@ss 10.0	27273701
eCl@ss 11.0	27273701
eCl@ss 12.0	27273701
ETIM 5.0	EC002615
ETIM 6.0	EC002615
ETIM 7.0	EC002615
ETIM 8.0	EC002615
UNSPSC 16.0901	32131023

Dimensional drawing (Dimensions in mm (inch))

Mounting bracket

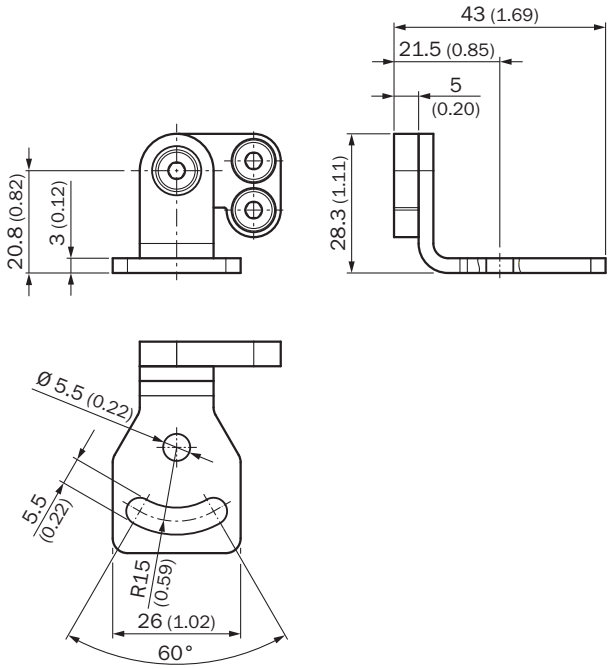

SICK AT A GLANCE

SICK is one of the leading manufacturers of intelligent sensors and sensor solutions for industrial applications. A unique range of products and services creates the perfect basis for controlling processes securely and efficiently, protecting individuals from accidents and preventing damage to the environment.

We have extensive experience in a wide range of industries and understand their processes and requirements. With intelligent sensors, we can deliver exactly what our customers need. In application centers in Europe, Asia and North America, system solutions are tested and optimized in accordance with customer specifications. All this makes us a reliable supplier and development partner.

Comprehensive services complete our offering: SICK LifeTime Services provide support throughout the machine life cycle and ensure safety and productivity.

For us, that is "Sensor Intelligence."

WORLDWIDE PRESENCE:

Contacts and other locations –www.sick.com

SICK
Sensor Intelligence.