Product data sheet

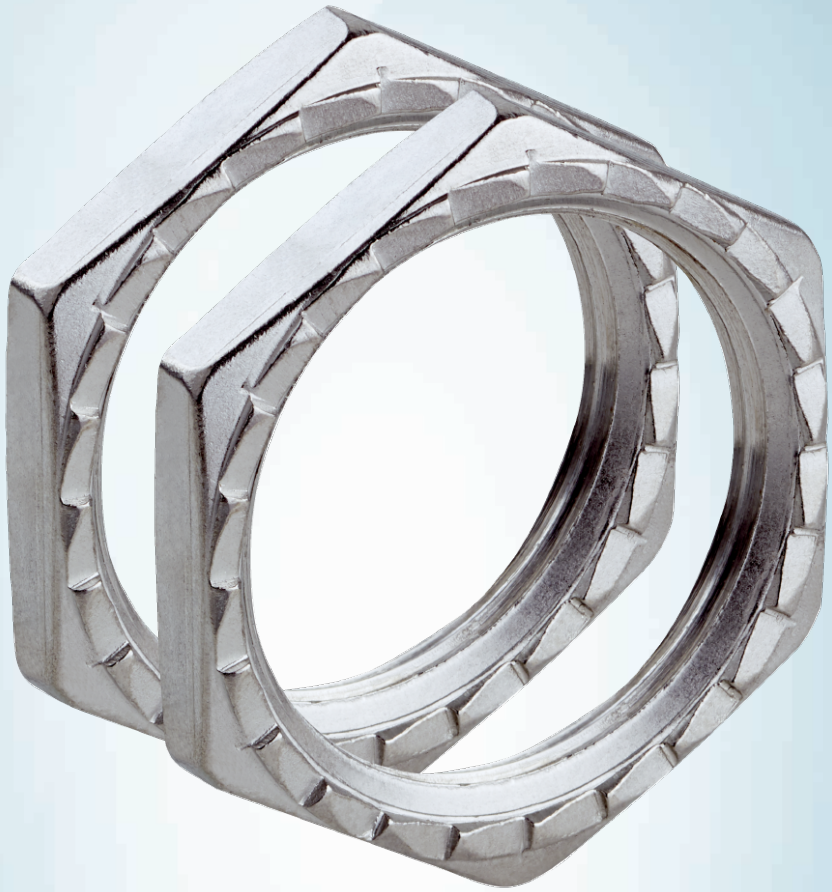

BEF-MU-M30N

SICK
Sensor Intelligence.

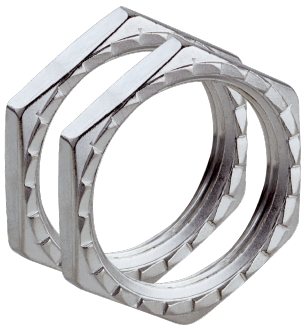

Ordering information

Type	Part no.
BEF-MU-M30N	2103190

Other models and accessories ➜ www.sick.com/

Detailed technical data

Technical specifications

Accessory group	Nuts and screws
Accessory family	Nuts
Material	Stainless steel V2A (1.4301)
Items supplied	2 pieces
Description	M30 x 1.5 hexagon nut with locking serration

Classifications

eCl@ss 5.0	27279202
eCl@ss 5.1.4	27279202
eCl@ss 6.0	27279202
eCl@ss 6.2	27279202
eCl@ss 7.0	27279202
eCl@ss 8.0	27279202
eCl@ss 8.1	27279202
eCl@ss 9.0	27273701
eCl@ss 10.0	27273701
eCl@ss 11.0	27273701
eCl@ss 12.0	27273701
ETIM 5.0	EC002024
ETIM 6.0	EC002024
ETIM 7.0	EC002024
ETIM 8.0	EC002024
UNSPSC 16.0901	31163032

Dimensional drawing (Dimensions in mm (inch))

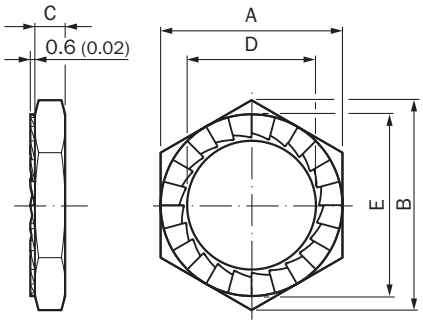

Dimension	M8	M12	M18	M30
A	13 –0,27	17 –0,27	24 –0,33	36 –1
B	Min. 14.38	Min. 18.9	Min. 26.75	Min. 39.55
C	4 –0,3	4 –0,3	4 –0,3	5 –0,3
D	M8 x 1	M12 x 1	M18 x 1	M30 x 1.5
E	Approx. 13	Approx. 17	Approx. 24	Approx. 36

SICK AT A GLANCE

SICK is one of the leading manufacturers of intelligent sensors and sensor solutions for industrial applications. A unique range of products and services creates the perfect basis for controlling processes securely and efficiently, protecting individuals from accidents and preventing damage to the environment.

We have extensive experience in a wide range of industries and understand their processes and requirements. With intelligent sensors, we can deliver exactly what our customers need. In application centers in Europe, Asia and North America, system solutions are tested and optimized in accordance with customer specifications. All this makes us a reliable supplier and development partner.

Comprehensive services complete our offering: SICK LifeTime Services provide support throughout the machine life cycle and ensure safety and productivity.

For us, that is "Sensor Intelligence."

WORLDWIDE PRESENCE:

Contacts and other locations –www.sick.com

SICK
Sensor Intelligence.