Product data sheet

IQ40-20BPSKC0K

IQG

INDUCTIVE PROXIMITY SENSORS

SICK
Sensor Intelligence.

Ordering information

Type	Part no.
IQ40-20BPSKC0K	1071840

Included in delivery: BEF-KH-IQ40 (1)

Other models and accessories → www.sick.com/IQG

Detailed technical data

Features

Housing	Rectangular
Housing	Short-body
Dimensions (W x H x D)	40 mm x 40 mm x 66 mm
Sensing range S_n	20 mm
Safe sensing range S_a	16.2 mm
Installation type	Flush
Switching frequency	150 Hz
Connection type	Male connector M12, 4-pin
Switching output	PNP
Output function	NO
Electrical wiring	DC 3-wire
Enclosure rating	IP67, IP68, IP69K
Special applications	Difficult application conditions
Items supplied	Push-lock mounting system (1x)

Mechanics/electronics

Supply voltage	10 V DC ... 30 V DC
Ripple	≤ 10 V_{pp} [1]
Voltage drop	≤ 2 V
Time delay before availability	≤ 50 ms
Hysteresis	3 % ... 15 % [2]
Reproducibility	≤ 2 %
Temperature drift (of S_r)	± 10 %

[1] Of Ub.
[2] Of S_r.
[3] Reference voltage: 50 V DC.

Continuous current I_a	≤ 200 mA
No load current	12.5 mA
Short-circuit protection	✓
Reverse polarity protection	✓
Power-up pulse protection	✓
Shock and vibration resistance	30 g, 11 ms / 10 ... 55 Hz, 1 mm
Ambient operating temperature	–25 °C ... +85 °C
Ambient temperature, storage	–40 °C ... +85 °C
Housing material	Plastic, PA 66
Sensing face material	Plastic, PA 66
Tightening torque, max.	1.8 Nm
Protection class	II [3]
UL File No.	E348498

[1] Of Ub.
[2] Of S_r.
[3] Reference voltage: 50 V DC.

Safety-related parameters

$MTTF_D$	1,125 years
DC_{avg}	0 %
T_M (mission time)	20 years

Reduction factors

Note	The values are reference values which may vary
Stainless steel (V2A, 304)	Approx. 0.71
Aluminum (Al)	Approx. 0.3
Copper (Cu)	Approx. 0.25
Brass (Br)	Approx. 0.36

Installation note

Remark	Associated graphic see "Installation"
A	0 mm
B	40 mm
C	40 mm
D	60 mm
E	0 mm
F	70 mm

Classifications

ECLASS 5.0	27270101
ECLASS 5.1.4	27270101
ECLASS 6.0	27270101
ECLASS 6.2	27270101
ECLASS 7.0	27270101

ECLASS 8.0	27270101
ECLASS 8.1	27270101
ECLASS 9.0	27270101
ECLASS 10.0	27270101
ECLASS 11.0	27270101
ECLASS 12.0	27274001
ETIM 5.0	EC002714
ETIM 6.0	EC002714
ETIM 7.0	EC002714
ETIM 8.0	EC002714
UNSPSC 16.0901	39122230

Installation note

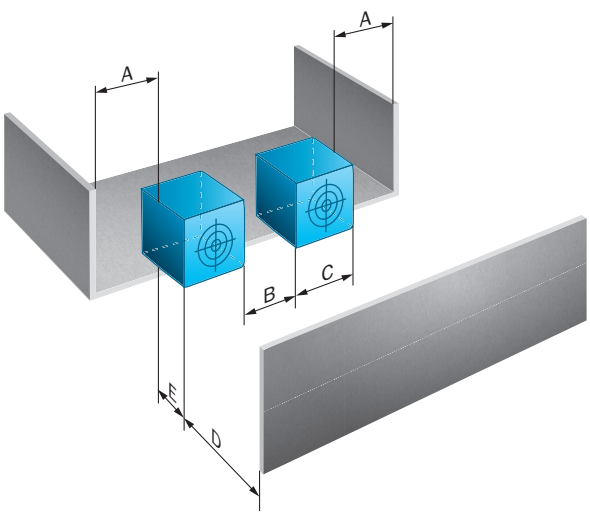

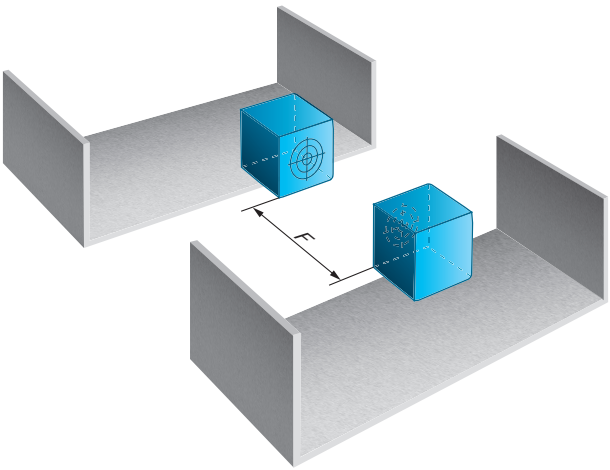

Connection diagram

Cd-011

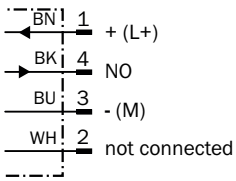

Response diagram

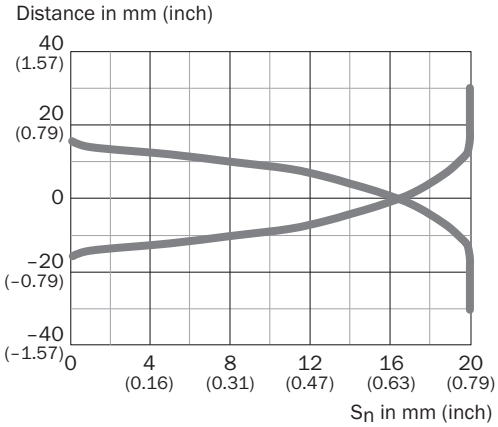

Dimensional drawing (Dimensions in mm (inch))

IQG Short-body housing

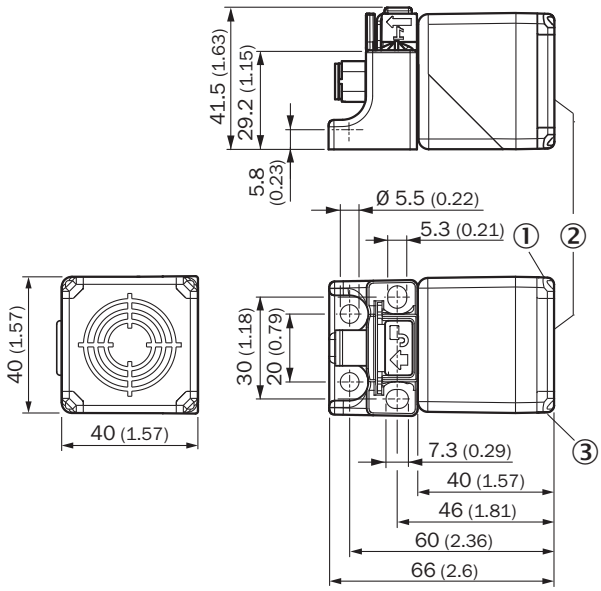

① LED output state, yellow
② Sensing face
③ Operational status LED, green

Recommended accessories

Other models and accessories ➜ www.sick.com/IQG

	Brief description	Type	Part no.
Plug connectors and cables			
	• **Connection type head A:** Female connector, M12, 4-pin, straight • **Description:** Unshielded, Head A: female connector, M12, 4-pin, straight, unshielded, for power supply, for cable diameter 4 mm ... 6 mm Head B: - • **Connection systems:** Screw-type terminals • **Permitted cross-section:** ≤ 0.75 mm²	DOS-1204-G	6007302
	• **Connection type head A:** Male connector, M12, 4-pin, straight • **Description:** Unshielded • **Connection systems:** Screw-type terminals • **Permitted cross-section:** ≤ 0.75 mm²	STE-1204-G	6009932
Others			
	• **Connection type head A:** Female connector, M12, 4-pin, straight, A-coded • **Connection type head B:** Flying leads • **Signal type:** Sensor/actuator cable • **Cable:** 5 m, 4-wire, PVC • **Description:** Sensor/actuator cable, unshielded • **Application:** Zones with chemicals	YF2A14-050VB3XLEAX	2096235
	• **Connection type head A:** Female connector, M12, 4-pin, angled, A-coded • **Connection type head B:** Flying leads • **Signal type:** Sensor/actuator cable • **Cable:** 5 m, 4-wire, PVC • **Description:** Sensor/actuator cable, unshielded • **Application:** Zones with chemicals	YG2A14-050VB3XLEAX	2095897

SICK AT A GLANCE

SICK is one of the leading manufacturers of intelligent sensors and sensor solutions for industrial applications. A unique range of products and services creates the perfect basis for controlling processes securely and efficiently, protecting individuals from accidents and preventing damage to the environment.

We have extensive experience in a wide range of industries and understand their processes and requirements. With intelligent sensors, we can deliver exactly what our customers need. In application centers in Europe, Asia and North America, system solutions are tested and optimized in accordance with customer specifications. All this makes us a reliable supplier and development partner.

Comprehensive services complete our offering: SICK LifeTime Services provide support throughout the machine life cycle and ensure safety and productivity.

For us, that is "Sensor Intelligence."

WORLDWIDE PRESENCE:

Contacts and other locations –www.sick.com

SICK
Sensor Intelligence.