Product data sheet

# IQ12-08NPSKT0S

IQB

**INDUCTIVE PROXIMITY SENSORS**

SICK
Sensor Intelligence.

Illustration may differ

## Ordering information

| Type | Part no. |
|---|---|
| IQ12-08NPSKT0S | 1055440 |

Other models and accessories → www.sick.com/IQB

## Detailed technical data

### Features

| | |
|---|---|
| **Housing** | Rectangular |
| **Dimensions (W x H x D)** | 12 mm x 40 mm x 26 mm |
| **Sensing range $S_n$** | 8 mm |
| **Safe sensing range $S_a$** | 6.48 mm |
| **Installation type** | Non-flush |
| **Switching frequency** | 2,000 Hz |
| **Connection type** | Connector M8, 3-pin |
| **Switching output** | PNP |
| **Output function** | NO |
| **Electrical wiring** | DC 3-wire |
| **Enclosure rating** | IP68 [1] |

[1] According to EN 60529.

### Mechanics/electronics

| | |
|---|---|
| **Supply voltage** | 10 V DC ... 30 V DC |
| **Ripple** | ≤ 10 % [1] |
| **Voltage drop** | ≤ 3 V [2] |
| **Time delay before availability** | ≤ 100 ms |
| **Hysteresis** | 5 % ... 15 % |
| **Reproducibility** | ≤ 2 % [3] [4] |

[1] Of $V_S$.
[2] At $I_a$ max.
[3] Supply voltage $U_B$ and constant ambient temperature Ta.
[4] Of Sr.

| | |
|---|---|
| **Temperature drift (of $S_r$)** | ± 10 % |
| **EMC** | According to EN 60947-5-2 |
| **Continuous current $I_a$** | ≤ 200 mA |
| **No load current** | 10 mA |
| **Short-circuit protection** | ✓ |
| **Reverse polarity protection** | ✓ |
| **Power-up pulse protection** | ✓ |
| **Shock and vibration resistance** | 30 g, 11 ms / 10 ... 55 Hz, 1 mm |
| **Ambient operating temperature** | –25 °C ... +75 °C |
| **Housing material** | Plastic, VISTAL® |
| **Sensing face material** | Plastic, VISTAL® |
| **Tightening torque, max.** | ≤ 1 Nm |

[1] Of $V_S$.
[2] At $I_a$ max.
[3] Supply voltage $U_B$ and constant ambient temperature Ta.
[4] Of Sr.

## Safety-related parameters

| | |
|---|---|
| **$MTTF_D$** | 1,730 years |
| **$DC_{avg}$** | 0 % |
| **$T_M$ (mission time)** | 20 years |

## Reduction factors

| | |
|---|---|
| **Note** | The values are reference values which may vary |
| **Stainless steel (V2A, 304)** | 0.7 |
| **Aluminum (Al)** | 0.5 |
| **Copper (Cu)** | 0.4 |
| **Brass (Br)** | 0.5 |

## Installation note

| | |
|---|---|
| **Remark** | Associated graphic see "Installation" |
| **A** | 10 mm |
| **B** | 36 mm |
| **C** | 12 mm |
| **D** | 24 mm |
| **E** | 16 mm |
| **F** | 64 mm |
| **G** | 16 mm |

## Classifications

| | |
|---|---|
| **ECLASS 5.0** | 27270101 |
| **ECLASS 5.1.4** | 27270101 |
| **ECLASS 6.0** | 27270101 |
| **ECLASS 6.2** | 27270101 |
| **ECLASS 7.0** | 27270101 |

| | |
|---|---|
| **ECLASS 8.0** | 27270101 |
| **ECLASS 8.1** | 27270101 |
| **ECLASS 9.0** | 27270101 |
| **ECLASS 10.0** | 27270101 |
| **ECLASS 11.0** | 27270101 |
| **ECLASS 12.0** | 27274001 |
| **ETIM 5.0** | EC002714 |
| **ETIM 6.0** | EC002714 |
| **ETIM 7.0** | EC002714 |
| **ETIM 8.0** | EC002714 |
| **UNSPSC 16.0901** | 39122230 |

## Installation note

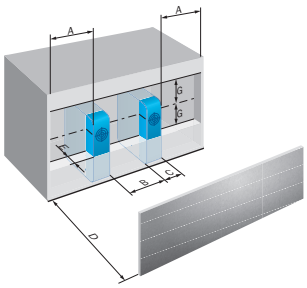


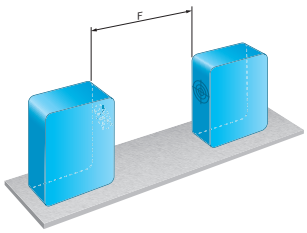


## Connection diagram

Cd-002

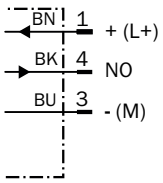

## Dimensional drawing (Dimensions in mm (inch))

IQ12, connector

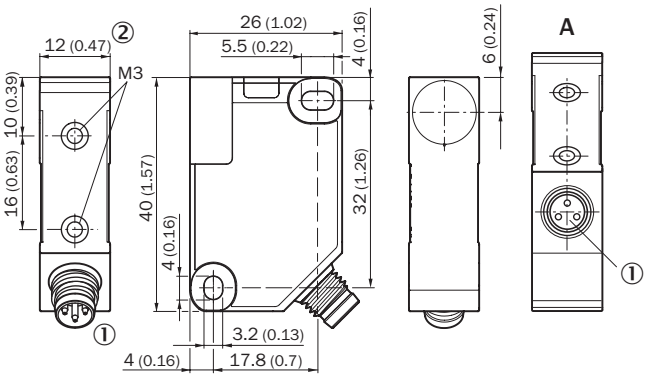


① Connection
② LED indicator 270°

## Recommended accessories

Other models and accessories ➜ www.sick.com/IQB

| | Brief description | Type | Part no. |
|---|---|---|---|
| Plug connectors and cables | | | |
| | • **Connection type head A:** Female connector, M8, 3-pin, straight<br>• **Description:** Unshielded<br>• **Connection systems:** Screw-type terminals<br>• **Permitted cross-section:** 0.14 mm² ... 0.5 mm² | DOS-0803-G | 7902077 |
| | • **Connection type head A:** Female connector, M8, 3-pin, angled<br>• **Description:** Unshielded<br>• **Connection systems:** Solder connection<br>• **Permitted cross-section:** ≤ 0.25 mm² | DOS-0803-W | 7902078 |
| Others | | | |
| | • **Connection type head A:** Female connector, M8, 3-pin, straight, A-coded<br>• **Connection type head B:** Flying leads<br>• **Signal type:** Sensor/actuator cable<br>• **Cable:** 2 m, 3-wire, PVC<br>• **Description:** Sensor/actuator cable, unshielded<br>• **Application:** Zones with chemicals | YF8U13-020VA1XLEAX | 2095860 |
| | • **Connection type head A:** Female connector, M8, 3-pin, straight, A-coded<br>• **Connection type head B:** Flying leads<br>• **Signal type:** Sensor/actuator cable<br>• **Cable:** 5 m, 3-wire, PVC<br>• **Description:** Sensor/actuator cable, unshielded<br>• **Application:** Zones with chemicals | YF8U13-050VA1XLEAX | 2095884 |
| | • **Connection type head A:** Female connector, M8, 3-pin, angled, A-coded<br>• **Connection type head B:** Flying leads<br>• **Signal type:** Sensor/actuator cable<br>• **Cable:** 2 m, 3-wire, PVC<br>• **Description:** Sensor/actuator cable, unshielded<br>• **Application:** Zones with chemicals | YG8U13-020VA1XLEAX | 2096165 |

| | Brief description | Type | Part no. |
|---|---|---|---|
| | • **Connection type head A:** Female connector, M8, 3-pin, angled, A-coded<br>• **Connection type head B:** Flying leads<br>• **Signal type:** Sensor/actuator cable<br>• **Cable:** 5 m, 3-wire, PVC<br>• **Description:** Sensor/actuator cable, unshielded<br>• **Application:** Zones with chemicals | YG8U13-050VA1XLEAX | 2096166 |

# SICK AT A GLANCE

SICK is one of the leading manufacturers of intelligent sensors and sensor solutions for industrial applications. A unique range of products and services creates the perfect basis for controlling processes securely and efficiently, protecting individuals from accidents and preventing damage to the environment.

We have extensive experience in a wide range of industries and understand their processes and requirements. With intelligent sensors, we can deliver exactly what our customers need. In application centers in Europe, Asia and North America, system solutions are tested and optimized in accordance with customer specifications. All this makes us a reliable supplier and development partner.

Comprehensive services complete our offering: SICK LifeTime Services provide support throughout the machine life cycle and ensure safety and productivity.

**For us, that is "Sensor Intelligence."**

# WORLDWIDE PRESENCE:

Contacts and other locations –www.sick.com



SICK
Sensor Intelligence.