Installation Instructions

Original Instructions

Series 9000 PHOTOSWITCH Intrinsically Safe Photoelectric Sensors

Catalog Numbers 42GRL-9540, 42GRL-9540-QD, 42GRL-9540-QD1, 42GRR-9500, 42GRR-9500-QD, 42GRR-9500-QD1

Description

The 42GRx-95xx is approved as an intrinsically safe apparatus under the entity concept by CSA for installation into a Class I; Division 1; Groups A, B, C, D hazardous location when wired as shown in the attached control drawing (75002-200). The sensor must be connected to an approved safety barrier for installation into Division 1 locations.

Wiring between the sensor and the safety barriers must comply with all relevant national standards and/or those standards set by the authority having jurisdiction at the installation site. These can include Article 504 of the National Electrical Code, ANSI/ISA RP-12.6 (United States), or CSA-C22.2 (Canada). Follow these minimum requirements for installation.

1. Intrinsically safe wiring must be separated from non-intrinsically safe wiring by at least 50 mm (2 in.). The use of tie-downs, grounded metal partitions, or approved insulating partitions are acceptable.
2. Intrinsically safe wiring shall be identified as such with labels placed no more than 7.62 m (25 ft) apart. The light blue color is internationally recognized as identifying intrinsically safe wiring. We recommend that cables, terminal blocks, raceways, cable ducts, and junction boxes be light blue.
3. The use of a gas-tight seal is required at the point where the wiring transitions the hazardous and nonhazardous location.
4. Intrinsically safe associated apparatus, cable shields, enclosures, and raceways (metal) shall be grounded in accordance with the requirements of Section 250 of the NEC (United States).
5. Nonhazardous location equipment must not contain a source voltage of greater than 250V.
6. As all wiring contains stored energy, all conductors must be considered when determining the length of intrinsically safe circuits. When available the actual values should be used. If not available, values of 60 pF/foot for capacitance per wire pair and 0.2 uH/foot for inductance may be used.

Dimensions [mm (in.)]

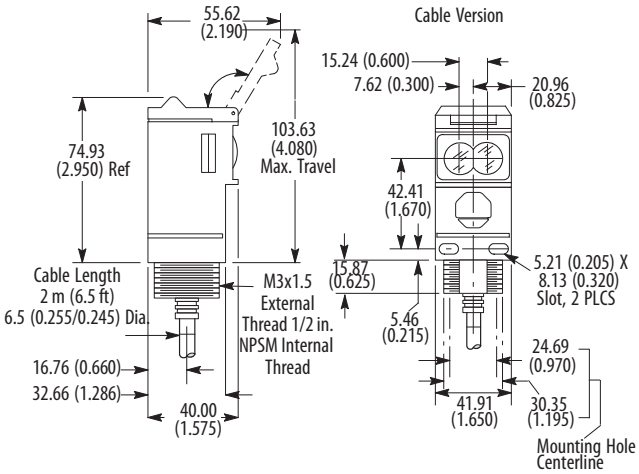

Connector Version

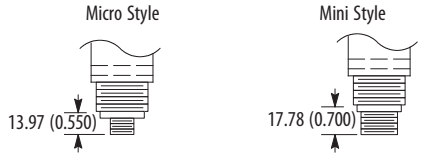

Typical Response Curve

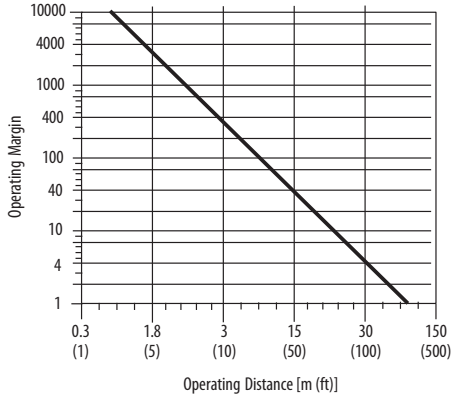

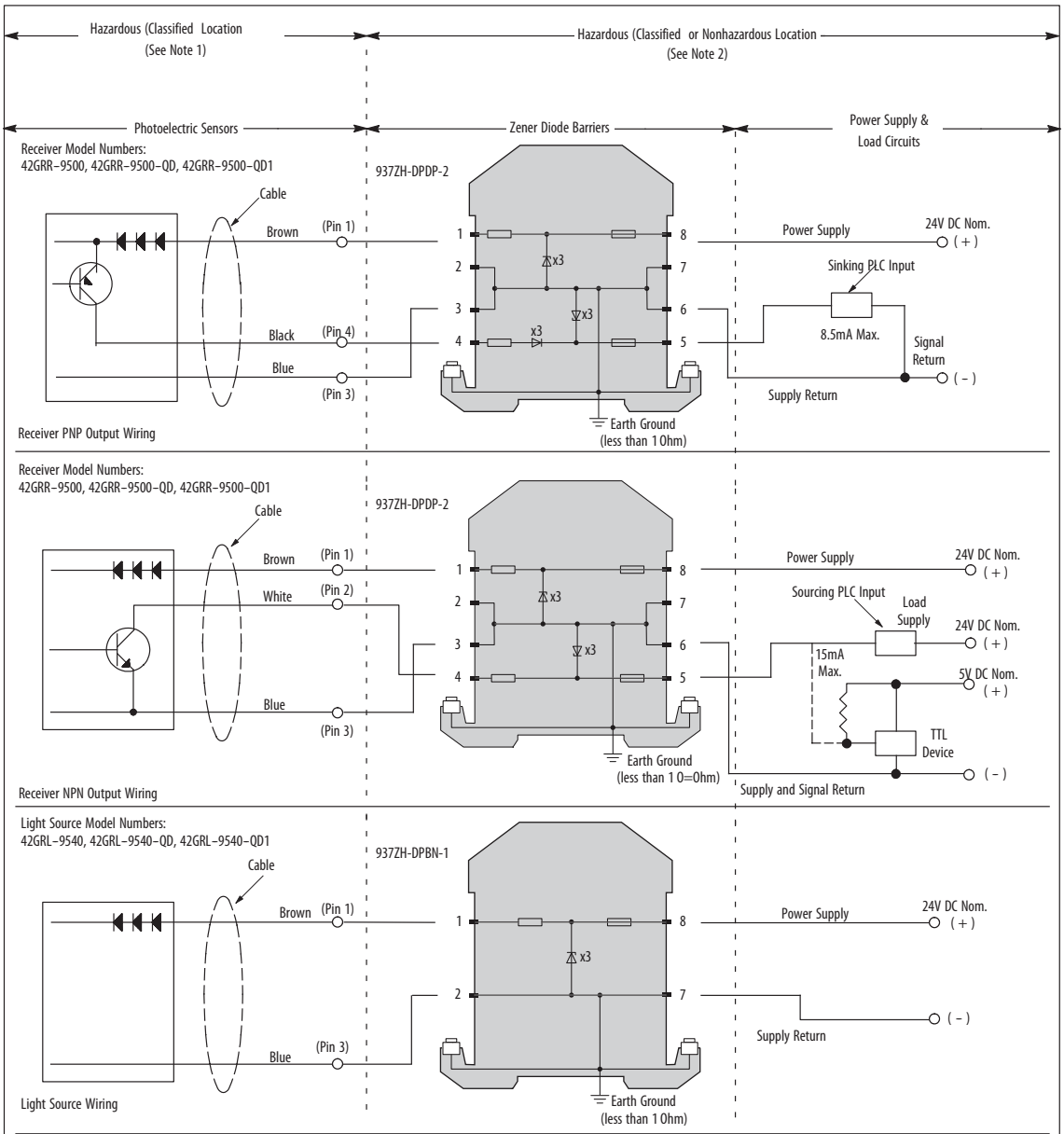

Table 1: Entity Parameters

Sensor			Barrier
Vmax	31.5V	≥	Vt
Imax	150mA	≥	It
Pmax	0.95W	≥	Pt
Ci	0 ı F	≤	Ca
Li	0mH	≤	La

Notes:

1. Class I; Division 1, Group A, B, C, D. Class I; Division 2, Group A, B, C, D.
2. Class I; Division 2, Group A, B, C, D if equipment and installation is per national standards.
3. Division 2 applications without the use of a barrier must be installed in accordance with the NEC and CEC.
4. Safety barriers are not required for Class I, Division 2 Group A, B, C, D non-incendive installations when installed per the CEC.
5. Entity parameters of Safety Barriers must match Table 1. Cable values for capacitance and inductance must be added to Ci and Li values.
6. In Division 2 installations without barriers, observe the following warning: **Warning explosion hazard. Do not disconnect equipment unless power has been switched off or the area is known to be nonhazardous**
7. Wiring between the sensor and safety barriers should comply with all relevant national standards and/or those standards set forth by the authority having jurisdiction at the installation site. These may include Article 504 of the NEC, ANSI/ISA RP-12.6 (United States), or CSA C22.2 (Canada).
8. Intrinsically Safe wiring must be separated from nonintrinsically safe wiring by at least 50 mm (2 in.). The use of tiedowns, grounded metal partitions, or approved insulating partitions are acceptable.
9. Intrinsically safe wiring shall be identifie as such with labels placed no more than 7.62 m (25 ft) apart. The color light blue is internationally recognized as identifying safe wiring.
10. The use of a gas-tight seal is required at the point where the wiring transitions the hazardous and nonhazardous location.
11. Intrinsically safe associated apparatus, cable shields, enclosures, and raceways (metal) shall be grounded in accordance with the requirements of Section 250 of the NEC.
12. Nonhazardous location equipment must not contain a source voltage of greater than 250V unless suffic nt means have been employed to prevent the shorting of a source voltage greater than 250V onto the nonintrinsically safe terminals of the associated apparatus.
13. Nonhazardous location equipment must not contain a source voltage of greater than 250V.
14. As all wiring contains stored energy (capacitance and inductance), all conductors must be considered when determining the length of intrinsically safe circuits. When available, the actual values should be used. If not available, values of 60 pF/foot for capacitance per wire pair and 0.2 uH/foot for inductance are accepted and may be used.
15. Maximum operating ambient temperature range: –34…+70°C (-29.2…+158°F) Type 4X.
16. Changes to this document are not permitted without prior approval by the testing agency.
17. **SHOCK HAZARD:** Potential electrostatic discharge hazard. Do not rub with dry cloth.

Rockwell Automation/Allen-Bradley
Control Drawing 75002-200-01 (Ver 04)

Accessories [mm (in.)]

Swivel/Tilt Mounting Assembly 60-2439

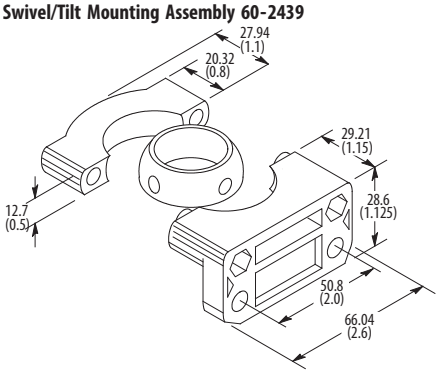

Universal Mounting Assembly 60-2421

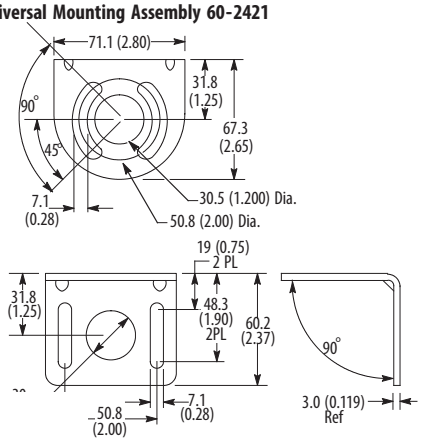

360° Rotation Mounting Assembly 60-2513

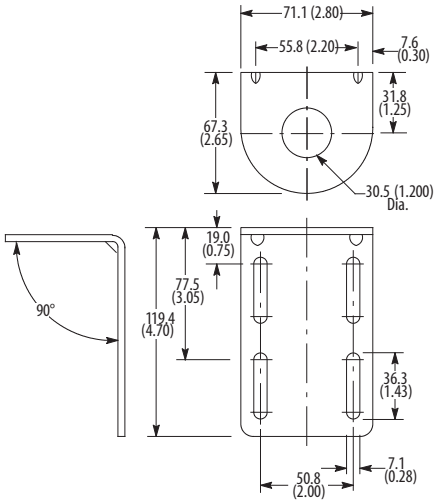

Torx Replacement Screw Kit 129-135 and Torx Screwdriver 57-144

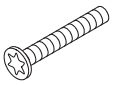

Screwdriver with torx head to be used with torx replacement screw kit 129–135.

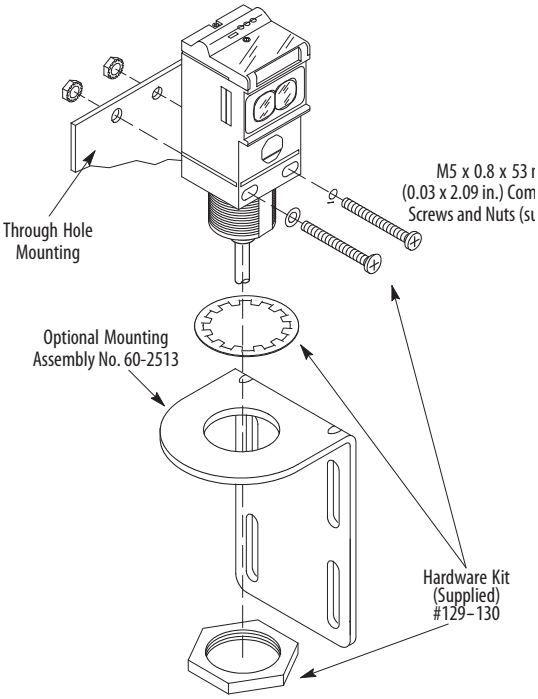

Allen-Bradley Series 937ZH
Zener Diode Barrier

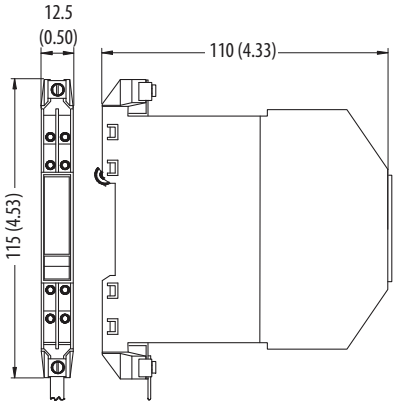

64–136
0.3 m (1 ft)
DIN Rail Mounting Kit

Specifications

Sensors			Transmitted Beam	
			Source	Receiver
1	Catalog Number			
	2 m Cable		42GRL-9540	42GRR-9500
	4-pin DC Micro QD		42GRL-9540-QD	42GRR-9500-QD
	4-pin DC Mini QD		42GRL-9540-QD1	42GRR-9500-QD1
2	Sensing Distance		106 m (350 ft)	
3	Field of View		1.5°	
4	Sensitivity Adjustment		Yes	
5	Transmitting LED		Infrared 880mn	—
6	Indicators		Yellow: Power	Yellow: Power, Green: Output, and Red: Margin
7	Supply Voltage		14…30V DC	13…30V DC
8	Max Current Consumption		16 mA	25 mA
9	Output		—	NPN and PNP
10	Max Load Current		—	15 mA (NPN) 8.5 mA (PNP)
11	Max Leakage Current		—	10?A
12	Response Time		10ms (ON) 5ms (OFF)	
13	Voltage Drop		4.5V (NPN) 6.0V (PNP) @ Max Load Current	
14	Operating Temperature		-34_C to +70_C (--29_F to +158_F)	
15	Relative Humidity		5% to 95%	
16	Housing/Lens Material		Acrylic	
17	Environmental Protection		NEMA 3, 4, 4X, 6P, 13, IP67 (IEC 529); 1200psi (8270kPa) Washdown	
18	Vibration		10…55 Hz, 1 mm amplitude, Meets or exceeds IEC 60947-5-2	
19	Shock		30G with 1 ms pulse duration, Meets or exceeds IEC 60947-5-2	
20	Electrical Protection		False Pulse, Reverse Polarity, Overload, Short Circuit	
21	Approvals (Ordinary Locations)		UL Listed, CSA Certified, CE Marked for all applicable directives	
22	Approvals (Hazardous Location)			
	Agency	**Standard**		
	FM	3610, 3611	Intrinsically Safe for Class I; Division 1; Groups A, B, C, and D Hazardous (Classified) Locations. Vmax=31.5V, Imax=150mA, Pmax=0.95W, Ci=0uF, Li=0mH, T4, Type 4X	
	FM	3810, 3600	Non-incendive for Class I; Division 2; Groups A, B, C, D; T4, Type 4X	
	CSA	CSA-C22.2 No. 157	Ex ia Intrinsically Safe for Class I; Division 1; Groups A, B, C, and D; Class III, Division 1, Vmax=31.5V, Imax=150mA, Ci=0?F and Li=0mH, T3A, Type 4X. Nonincendive for Class I; Division 2; Groups A, B, C, D; T3A, Type 4X	
	CSA	CSA-C22.2 No. 213		
	CSA	CSA-C22.2 No. 142		

Rockwell Automation maintains current product environmental information on its website at
http://www.rockwellautomation.com/rockwellautomation/about-us/sustainability-ethics/product-environmental-compliance.page.

Allen-Bradley, Rockwell Automation, Rockwell Software, and PHOTOSWITCH are trademarks of Rockwell Automation, Inc.
Trademarks not belonging to Rockwell Automation are property of their respective companies.

Rockwell Otomasyon Ticaret A.Ş., Kar Plaza İş Merkezi E Blok Kat:6 34752 İçerenköy, İstanbul, Tel: +90 (216) 5698400

www.rockwellautomation.com

Power, Control and Information Solutions Headquarters

Americas: Rockwell Automation, 1201 South Second Street, Milwaukee, WI 53204-2496 USA, Tel: (1) 414.382.2000, Fax: (1) 414.382.4444
Europe/Middle East/Africa: Rockwell Automation NV, Pegasus Park, De Kleetlaan 12a, 1831 Diegem, Belgium, Tel: (32) 2 663 0600, Fax: (32) 2 663 0640
Asia Pacific: Rockwell Automation, Level 14, Core F, Cyberport 3, 100 Cyberport Road, Hong Kong, Tel: (852) 2887 4788, Fax: (852) 2508 1846

Publication 9000-IN003B-EN-P - March 2016
Supersedes Publication 9000-IN003A-EN-P - November 2012

PA-9802 (Ver 05)

Copyright © 2016 Rockwell Automation, Inc. All rights reserved. Printed in the U.S.A.