Technical Data

Original Instructions

ClearMultiprint Media Specifications

Bulletin 1492

Topic	Page
Wrap-Around Wire Labels, Polyester Film	3
Wrap-Around Wire Labels, Vinyl Film	8
Cable Tie Markers	11
Feed-through Wire Labels	12
Heat Shrink Labels	13
Adhesive Labels	20
Gray	20
Marker Tags on a Spool Compatible with 1492-J,L Terminal Blocks	23
Marker Tags on a Spool Compatible with 1492-P Push-inTerminal Blocks	26
Marker Tags on a Spool Compatible with 1492-W Terminal Blocks	29
Marker Tags on a Spool Compatible with Phoenix Contact Terminal Blocks	31
Marker Tags on a Spool Compatible with Wago Terminal Blocks	34
Transparent End Anchor Markers	35
Transparent Wire Markers	35
Additional Resources	37

Summary of Changes

This publication contains the following new or updated information. This list includes substantive updates only and is not intended to reflect all changes.

Topic	Page
New catalog numbers include:	
Wrap-Around Wire Labels, Vinyl Film	8
1492-MTWOV13X19	
1492-MTWOV13X38	
1492-MTWOV25X19	
1492-MTWOV25X32	
1492-MTWOV25X38	
1492-MTWOV25X57	
1492-MTWOV25X64	
Heat Shrink Labels	13
1492-MHS2X12	
1492-MHS3X12	
1492-MHS5X12	
1492-MHS6X12	
1492-MHS10X12	
1492-MHS2X50	
1492-MHS3X50	
1492-MHS5X50	
1492-MHS6X50	
1492-MHS10X50	
Marker Tags on a Spool Compatible with 1492-J,L Terminal Blocks	23
1492-MT5X12-BP	
1492-MT6X12-BP	
1492-MT5X10	
1492-MT6X10	
Marker Tags on a Spool Compatible with 1492-P Push-inTerminal Blocks	26
1492-MT10X8	
1492-MT12X8	
1492-MT16X8	
Marker Tags on a Spool Compatible with 1492-W Terminal Blocks	29
1492-MTW5X9	
1492-MTW6X9	
1492-MTW8X9	
1492-MTW5X12	
1492-MTW6X12	
1492-MTW8X12	
Marker Tags on a Spool Compatible with Phoenix Contact Terminal Blocks	31
1492-MTCPC5X10	
1492-MTCPC5X10	
1492-MTCPC6X10	
1492-MTCPC8X10	
1492-MTCPC5X5	
1492-MTCPC6X5	
1492-MTCPC5X8	
Marker Tags on a Spool Compatible with Wago Terminal Blocks	34
1492-MTCW5X5	
1492-MTCW5X9	
1492-MTCW5X9F	

Wrap-Around Wire Labels, Polyester Film

Catalog Number	1492-MTW012X18	1492-MTW015X71
Labels on roll		
Single label		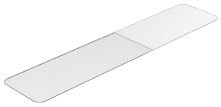
Material description	White, polyester film with polyacrylate adhesive	
Label dimensions, mm (in.)	12 x 18 (1.3 x 3.6)	15 x 71 (0.6 x 2.8)
Print area, mm (in.)	12 x 9 (0.5 x 0.35)	15 x 30 (0.6 x 1.18)
Wire O.D. range, mm (in.)	1 ...3 (0.04 ...0.16)	1 ...12.7 (0.04 ...0.5)
Quantity per roll	10,000	500
Temperature, operating	-40 ...+150 °C (-40...+302 °F)	
Ribbon/roller	Cat. No. 1492-PRIBLAB/ Cat. No.1492-PROLLLAB	

Catalog Number	1492-MTW025X62	1492-MTW025X76	1492-MTW025X95	1492-MTW025X140
Labels on roll				
Single label		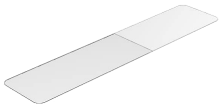		
Material description	White, polyester film with polyacrylate adhesive			
Label dimensions, mm (in.)	25 x 62 (0.98 x 2.44)	25 x 76 (0.98 x 2.99)	25 x 95 (1.0 x 3.75)	25 x 140 (1.0 x 5.5)
Print area, mm (in.)	25 x 19 (0.98 x 0.75)	25 x 15 (0.98 x 0.6)	25 x 25 (1.0 x 1.0)	25 x 26 (0.98 x 1.02)
Wire O.D. range, mm (in.)	1 ...3.7 (0.04...0.54)	1 ...12.7 (0.04...0.5)	1 ...22.3 (0.04...0.88)	1 ...36.4 (0.04...1.43)
Quantity per roll	2500	1800	1000	1050
Temperature, operating	-40 ...+150 °C (-40...+302 °F)			
Ribbon/roller	Cat. No. 1492-PRIBLAB/ Cat. No.1492-PROLLLAB			

Catalog Number	1492-MTW034X93	1492-MTW051X36	1492-MTW051X150
Labels on roll			
Single label			
Material description	White Polyester film with polyacrylate adhesive		
Label dimensions, mm (in.)	34 x 93 (1.3 x 3.6)	51 x 36 (2.0 x 1.4)	51 x 150 (2.0 x 6)
Print area, mm (in.)	34 x 25 (1.3 x 1.0)	51 x 13 (2.0 x 0.5)	51 x 25 (2.0 x 1.0)
Wire O.D. range, mm (in.)	1 ...22 (0.04...0.88)	1 ...12.1 (0.04...0.47)	1 -39.7 (0.04...1.56)
Quantity per roll	500	1000	500
Temperature, operating	-40 ...+150 °C (-40...+302 °F)		
Ribbon/roller	Cat. No. 1492-PRIBLAB/ Cat. No.1492-PROLLLAB		

Approximate Dimensions

Approximate dimensions are shown in millimeters (inches) and are not intended to be used for manufacturing purposes.

1492-MTW012X18

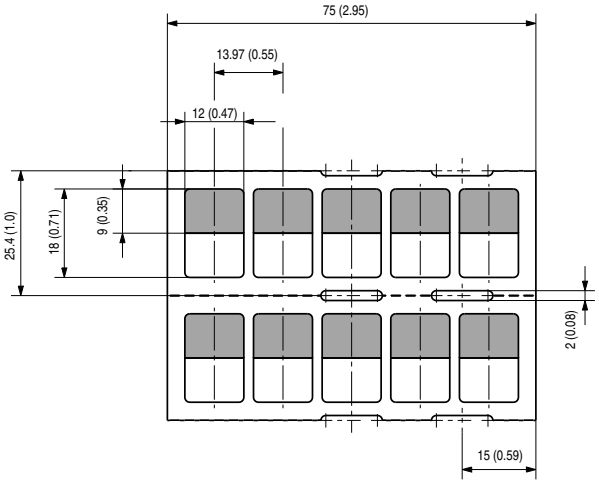

1492-MTW015X71

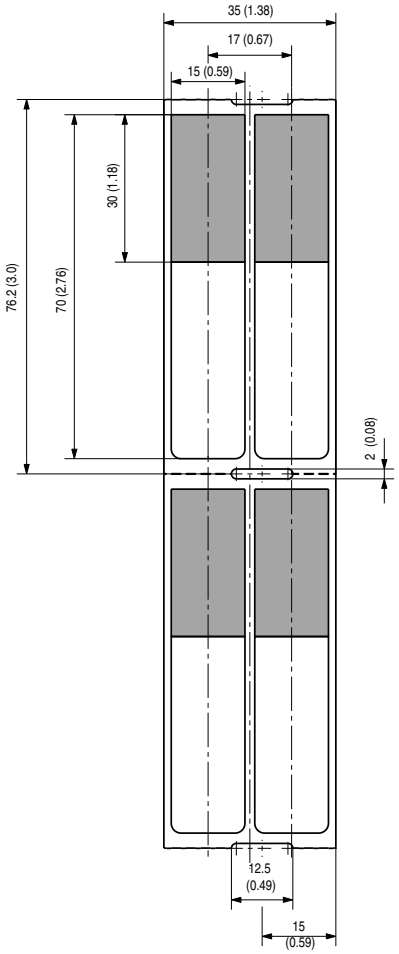

1492-MTW025X62

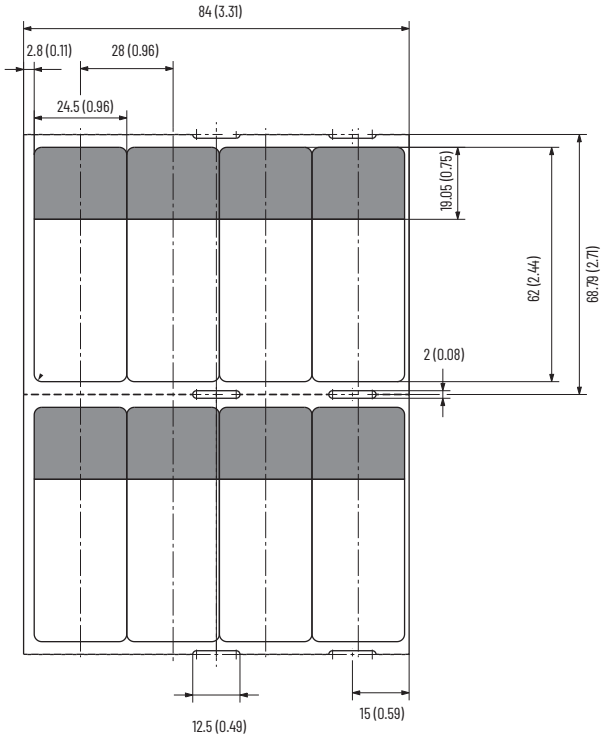

1492-MTW025X76

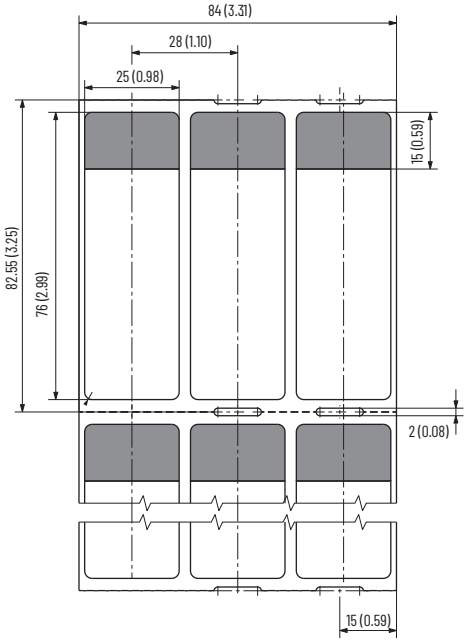

1492-MTW025X95

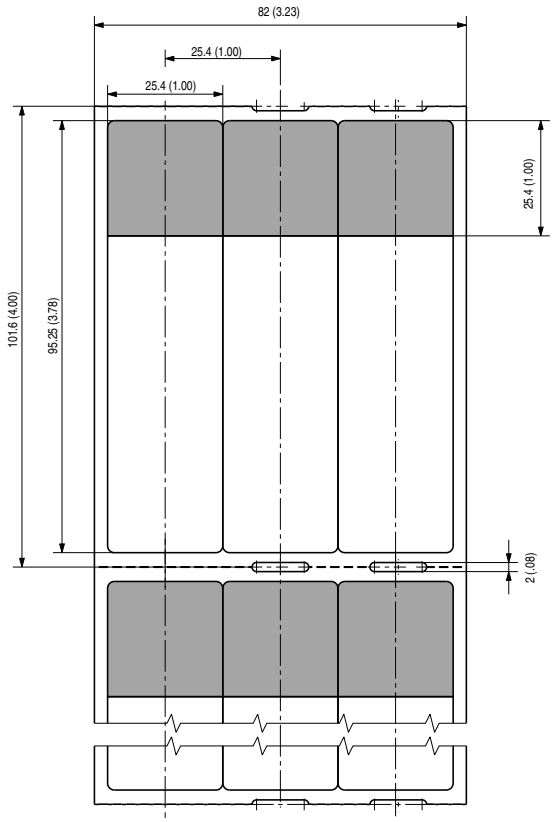

1492-MTW034X93

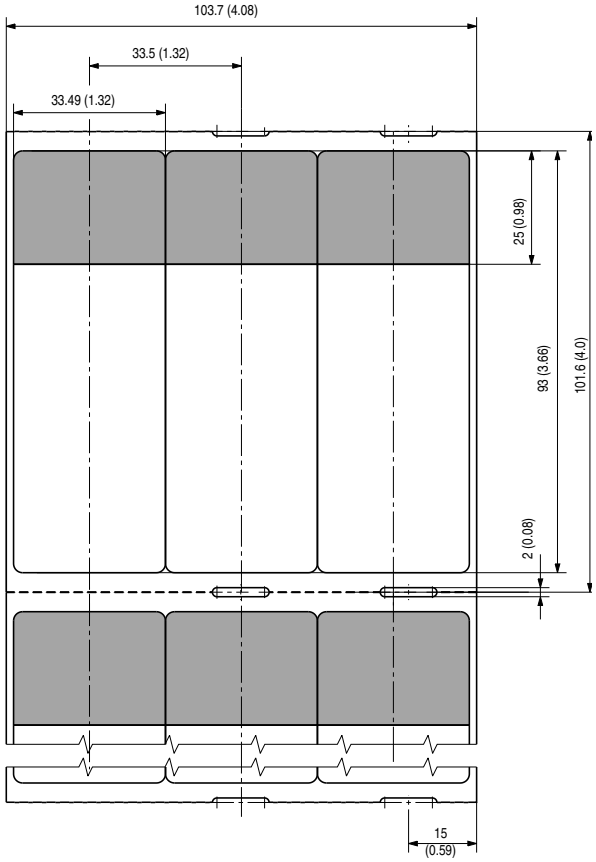

1492-MTW025X140

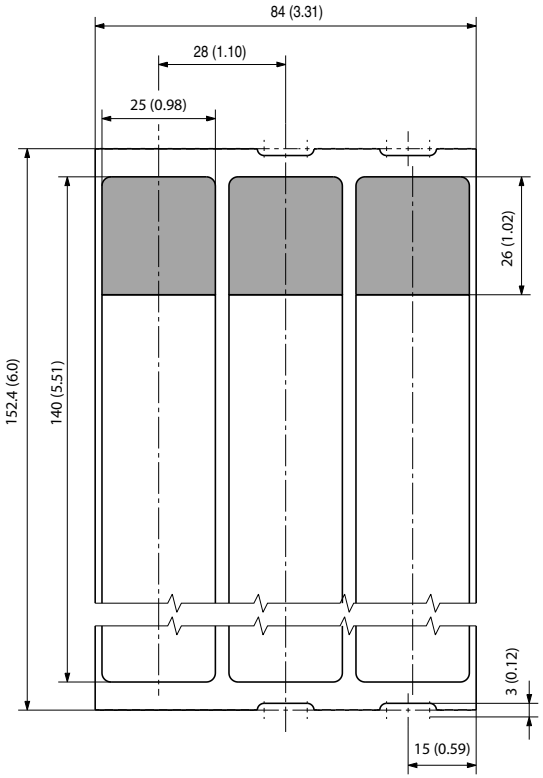

1492-MTW051X36

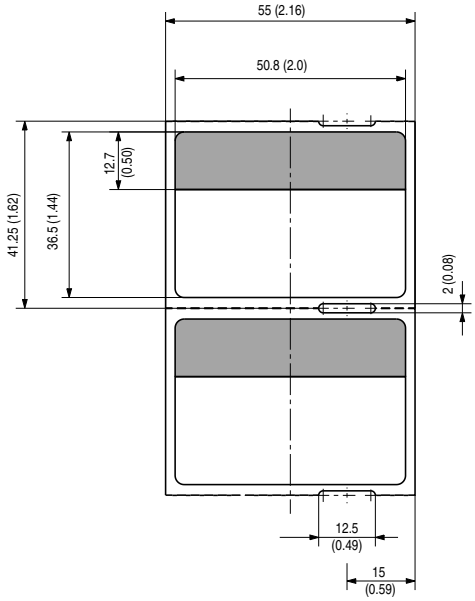

1492-MTW051X150

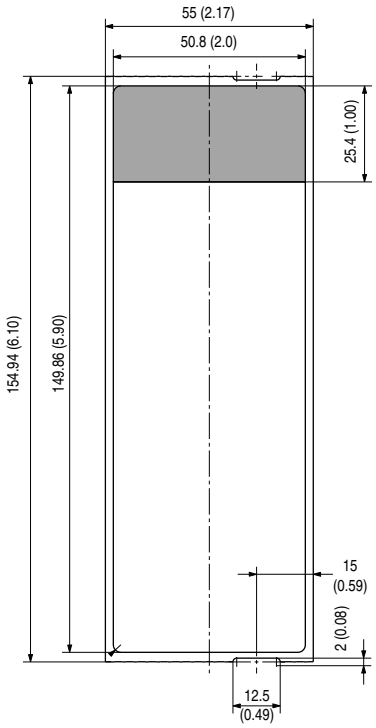

Wrap-Around Wire Labels, Vinyl Film

Catalog Number	1492-MTW0V13X19	1492-MTW0V13X38	1492-MTW0V25X19	1492-MTW0V25X32
Labels on roll	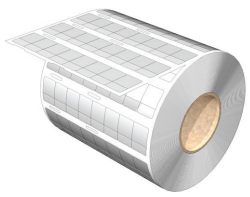	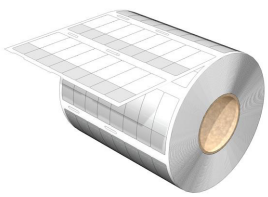	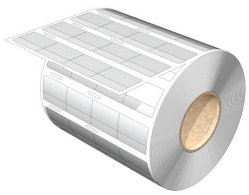	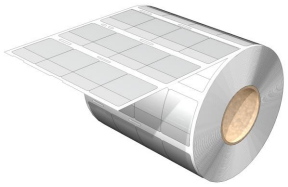
Single label		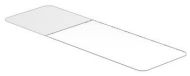		
Material description	White Vinyl film with polyacrylate adhesive			
Label dimensions, mm (in.)	13 x 19 (0.51 x 0.75)	13 x 38 (0.51 x 1.50)	25 x 19 (0.98 x 0.75)	25 x 32 (0.98 x 1.26)
Print area, mm (in.)	13 x 7 (0.51 x 0.28)	13 x 13 (0.51 x 0.51)	25 x 7 (0.98 x 0.28)	25 x 10 (0.98 x 0.39)
Wire O.D. range, mm (in.)	2 ...4 (.08 ... 0.16)	4 ...8 (0.16 ... 0.31)	2 ...4 (.08 ...0.16)	3 ...7 (0.12 ... 0.28)
Quantity per roll	10000	10000	2000	2000
Temperature, operating	-40...+80 °C (-40...+176 °F)			
Ribbon/roller	Cat. No. 1492-PRIBLAB/ Cat. No.1492-PROLLLAB			

Catalog Number	1492-MTW0V25X38	1492-MTW0V25X57	1492-MTW0V25X64
Labels on roll	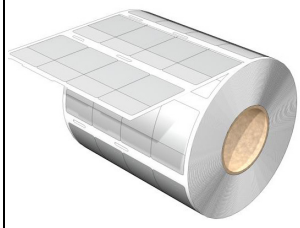		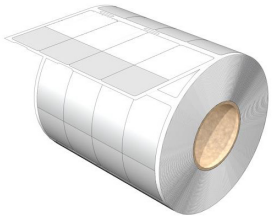
Single label		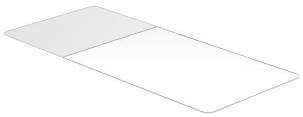	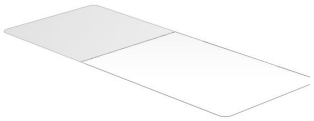
Material description	White vinyl film with polyacrylate adhesive		
Label dimensions, mm (in.)	25 x 38 (0.98 x 1.50)	25 x 57 (0.98 x 2.24)	25 x 64 (0.98 x 2.52)
Print area, mm (in.)	25 x 13 (0.98 x 0.51)	25 x 19 (0.98 x 0.75)	25 x 25 (0.98 x 0.98)
Wire O.D. range, mm (in.)	4 ...8 (0.16...0.31)	6 ...12 (0.24...0.47)	8 ...12 (0.31 ...0.47)
Quantity per roll	2000	2000	2000
Temperature, operating	-40...+80 °C (-40...+176 °F)		
Ribbon/roller	Cat. No. 1492-PRIBLAB/ Cat. No.1492-PROLLLAB		

Approximate Dimensions

Approximate dimensions are shown in millimeters (inches) and are not intended to be used for manufacturing purposes.

1492-MTWOV13X19

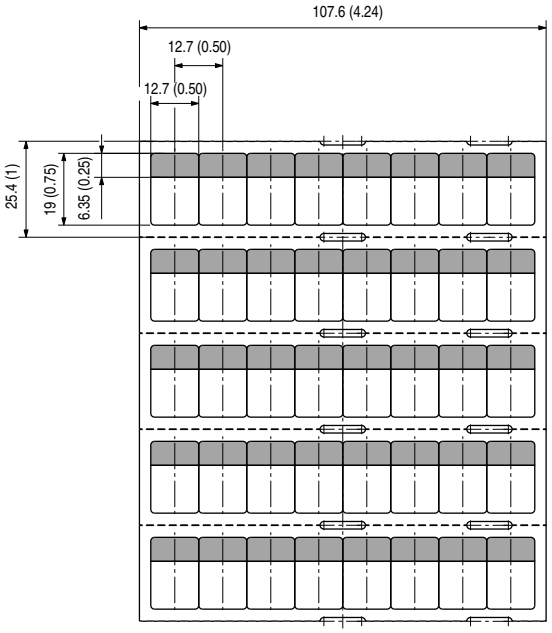

1492-MTWOV13X38

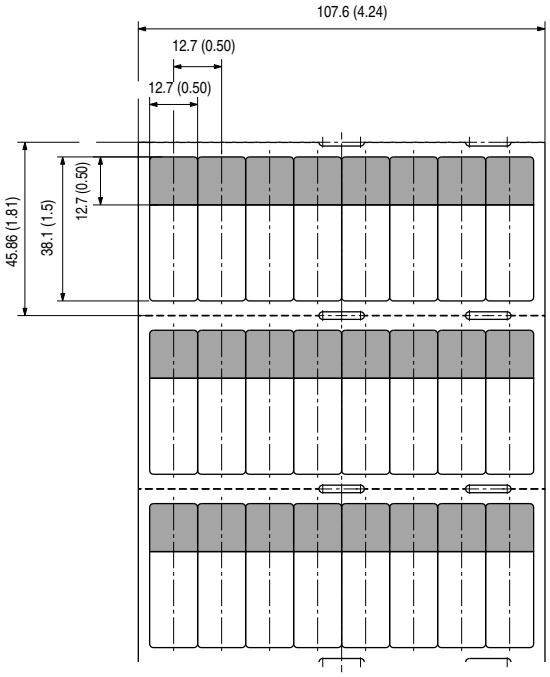

1492-MTWOV25X19

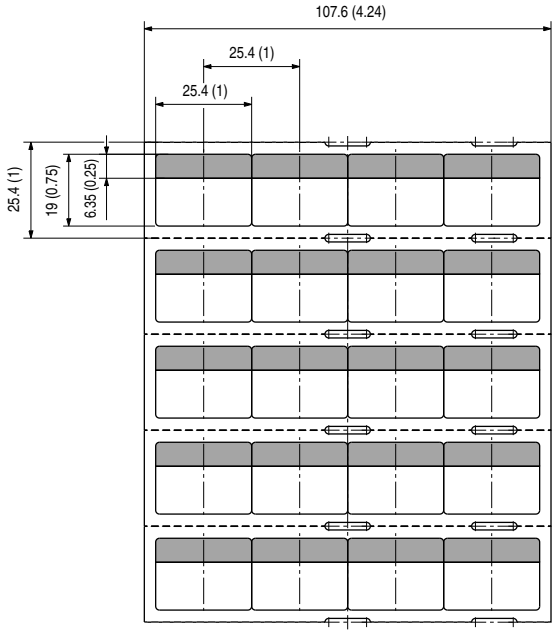

1492-MTWOV25X32

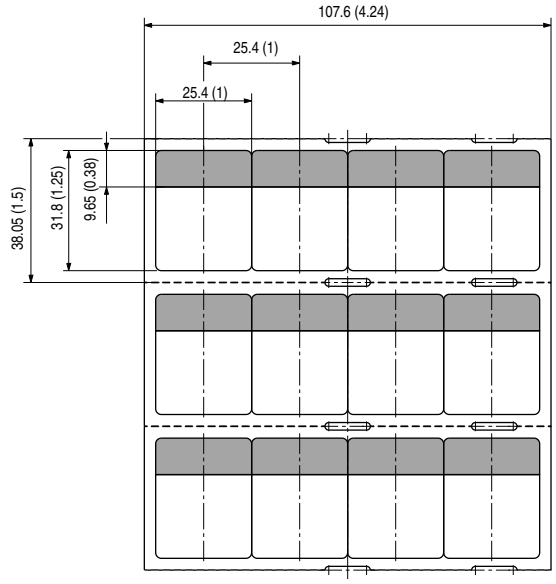

1492-MTWOV25X38

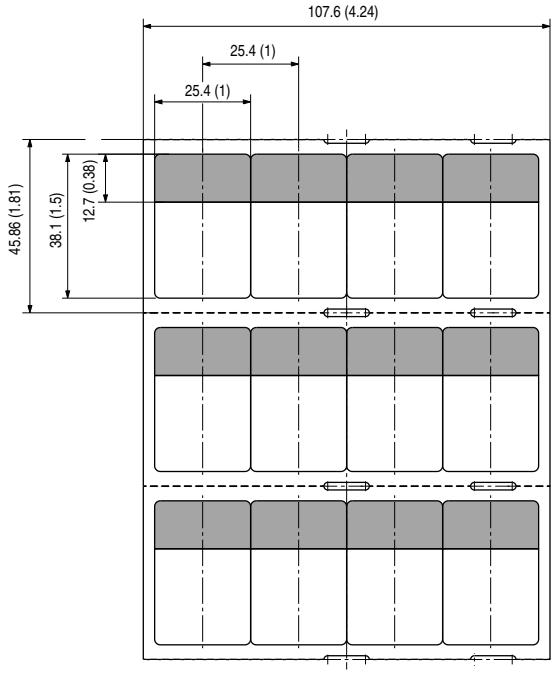

1492-MTWOV25X64

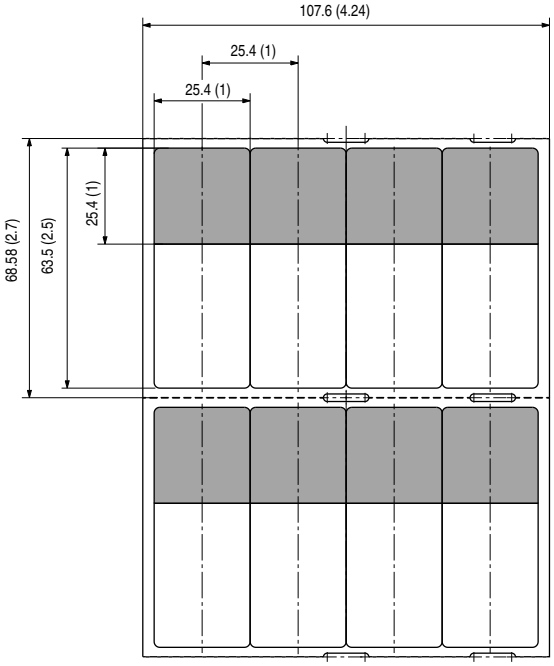

1492-MTWOV25X57

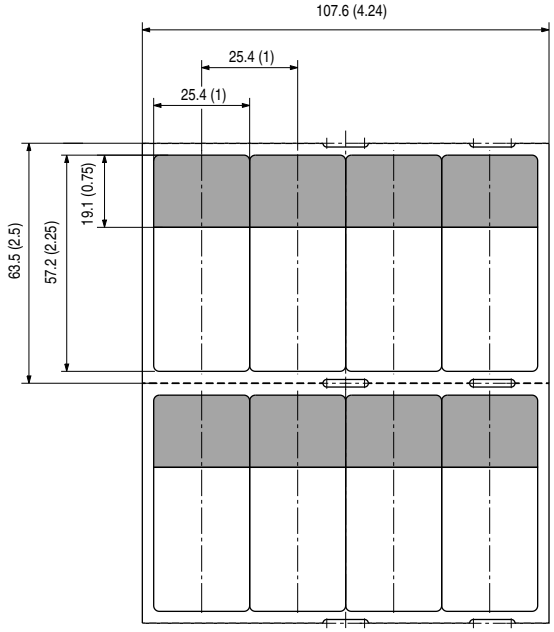

Cable Tie Markers

Catalog Number	1492-MWCT9X24	1492-MWCT11X60	1492-MWCT30X60
Labels on the roll			
Single label			
Material description	White, halogen-free, polyurethane with polyacrylate adhesive		
Label dimensions, mm (in.)	9 x 24 (0.35 x 0.95)	11 x 60 (0.43 x 2.36)	30 x 60 (1.18 x 2.36)
Print area, mm (in.)	9 x 24 (0.35 x 0.95)	11 x 44 (0.43 x 1.73)	30 x 44 (1.18 x 1.77)
Wire O.D. range, mm (in.)	from 7 (0.28)		
Quantity per roll	1000	1000	300
Temperature, operating	-40...+90 °C (-40...+194 °F)		
Roller/ribbon	Ribbon: Cat. No. 1492-PRIBLAB, Roller: Cat. No.1492-PROLLLAB		

Approximate Dimensions

Approximate dimensions are shown in millimeters (inches) and are not intended to be used for manufacturing purposes.

1492-MWCT9X24

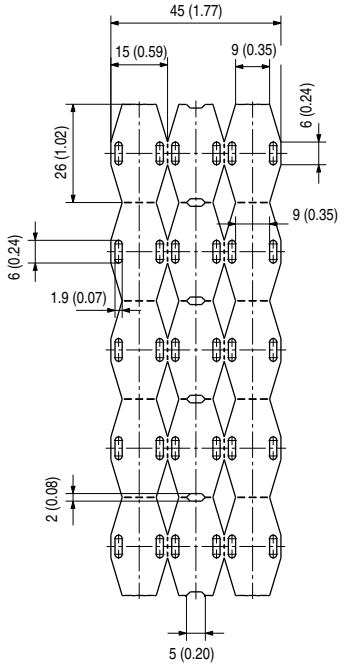

1492-MWCT11X60

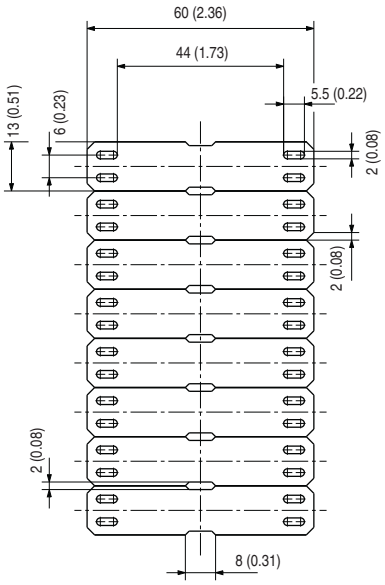

1492-MWCT30X60

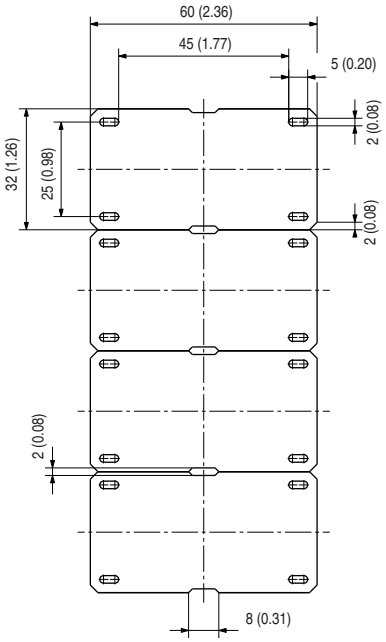

Feed-through Wire Labels

Catalog Number	1492-MWT4X23	1492-MWT5X23	1492-MWT6X23	1492-MWT10X23
Labels on the roll				
Single label				
Material description	White polyurethane			
Label dimensions, mm (in.)	4 x 23 (0.15 x 0.91 in.)	5 x 23 (0.2 x 1.0)	6 x 23 (0.24 x 1.0)	10 x 23 (0.39 x 1.0)
Print area, mm (in.)	4 x 23 (0.15 x 0.51)	5 x 13 (0.20 x 0.51)	6 x 13 (0.24 x 0.51)	12 x 10 (0.47 x 0.39)
Wire O.D. range, mm (in.)	1...2 (0.04...0.08)	2...3.5 (0.08...0.14)	3.5...5 (0.14...0.20)	3.5...5 (0.14...0.20)
Quantity per roll	2000			
Temperature, operating	-40...+150 °C (-40...+302 °F)			
Ribbon/roller	Ribbon:1492-PRIBLAB, Roller: 1492-PROLLLAB			

Approximate Dimensions

Approximate dimensions are shown in millimeters (inches) and are not intended to be used for manufacturing purposes.

1492-MWT4X23

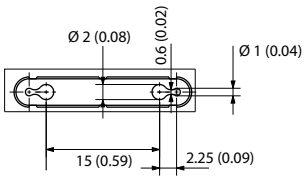

1492-MWT5X23

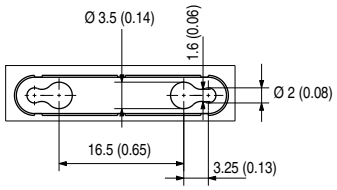

1492-MWT6X23

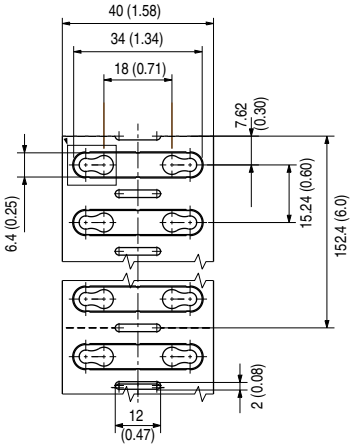

1492-MWT10X23

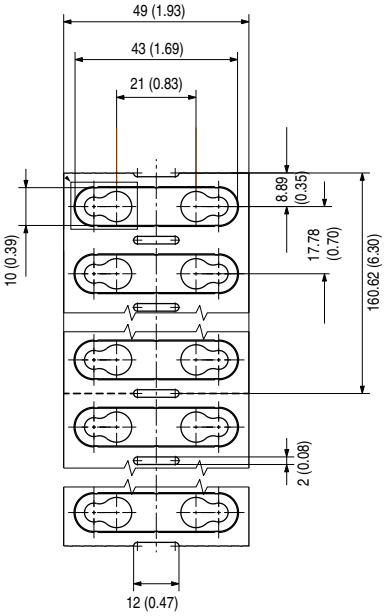

Heat Shrink Labels

Catalog Number	1492-MHS2X25	1492-MHS3X25	1492-MHS5X25	1492-MHS6X25
Labels on the roll			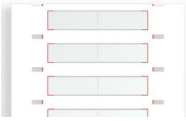	
Single label				
Material description	White, polyolefin, 3:1 rate of shrinkage			
Wire O.D. range mm (in.)	0.8...2.4 (0.03...0.09)	1...3.2 (0.04...0.13)	1.6...4.8 (0.063...0.189)	2.1...6.4 (0.083...0.252)
Wire cross-section range mm^2 (in ^{2})	0.25...0.5 (0.0004 ...0.0008)	0.5 ...1.5 (0.0008 ...0.0023)	0.75 ...4 (0.0011 ...0.0062)	1.5 ...6.4 (0.0023 ...0.0093)
Label dimensions, mm (in.)	4.2 x 25 (0.17 x 1)	5.6 x 25 (0.22 x 1)	8 x 25 (0.3 x 1)	11 x 25 (0.42 x 1)
Approximate AWG	20...24	16...20	12...18	10...16
Quantity per roll	2000	2000	2000	2000
Temperature, shrinkage	90 °C (194 °F)			
Ribbon/ roller	Ribbon: 1492-PRIBHS, Roller: 1492-PROLLLAB			

Catalog Number	1492-MHS10X25	1492-MHS13X25	1492-MHS19X25	1492-MHS25X25	1492-MHS38X25
Labels on the roll	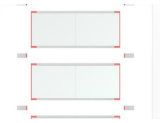			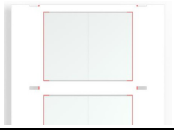	
Single label					
Material description	White, polyolefin, 3:1 rate of shrinkage				
Wire O.D. range, mm (in.)	3.2...9.5 (0.126...0.374)	4.2...12.7 (0.165...0.5)	6.4...19.1 (0.252...0.752)	8.5...25.4 (0.335...1)	12.7...38.1 (0.5...1.5)
Wire cross-section range, mm^2 (in ^{2})	4...16 (0.006 ...0.025)	6...35 (0.0093 ...0.0543)	16...70 (0.025 ...0.108)	35...120 (0.054 ...0.186)	125...240 (0.194 ...0.372)
Label dimensions, mm (in.)	15 x 25 (0.59 x 1)	21 x 25 (0.82 x 1)	31 x 25 (1.21x 1)	40 x 25 (1.59 x 1)	60 x 25 (2.38 x 1)
Approximate AWG	6...12	2...10	2/0...6	4/0...2	300...500 MCM
Quantity per roll	1000	1000	800	400	400
Temperature, shrinkage	90 °C (194 °F)				
Ribbon/ roller	Ribbon: 1492-PRIBHS, Roller: 1492-PROLLLAB				

Catalog Number	1492-MHS2X12	1492-MHS2X50	1492-MHS3X12	1492-MHS3X50	1492-MHS5X12
Labels on the roll	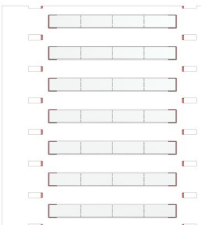	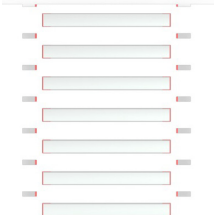	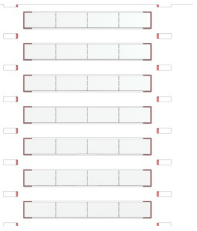	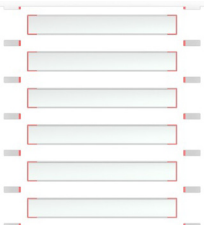	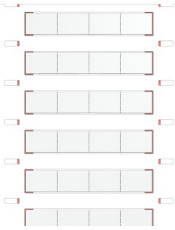
Single label					
Material description	White, polyolefin, 3:1 rate of shrinkage				
Wire O.D. range, mm (in.)	0.8...2.4 (0.03...0.09)	0.8...2.4 (0.03...0.09)	1...3.2 (0.04...0.13)	1...3.2 (0.04...0.13)	1.6...4.8 (0.063...0.189)
Wire cross-section range mm^2 (in^2)	0.25 ...0.5 (0.0004 ...0.0008)	0.25 ...0.5 (0.0004 ...0.0008)	0.5 ...1.5 (0.0008 ...0.0023)	0.5 ...1.5 (0.0008 ...0.0023)	0.75 ...4 (0.0011 ...0.0062)
Label dimensions, mm (in.)	5 x 12 (0.20 x 0.47)	4.2 x 50 (0.17 x 1.97)	6.2 x 12 (0.24 x 0.47)	5.6 x 50 (0.22 x 1.97)	8.7 x 12 (0.34 x 0.47)
Approximate AWG	20...24	20...24	16...20	16...20	12...18
Quantity per roll	4000	1000	4000	1000	4000
Temperature, shrinkage	90 °C (194 °F)				
Ribbon/ roller	Ribbon: 1492-PRIBHS, Roller: 1492-PROLLLAB				

Catalog Number	1492-MHS5X50	1492-MHS6X12	1492-MHS6X50	1492-MHS10X12	1492-MHS10X50
Labels on the roll	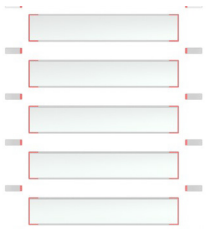	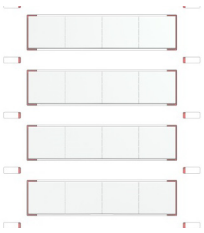	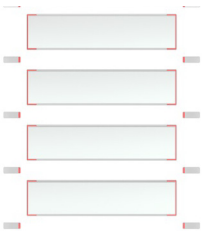	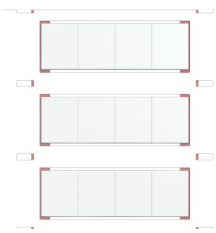	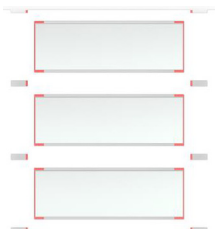
Single label					
Material description	White, polyolefin, 3:1 rate of shrinkage				
Wire O.D. range, mm (in.)	1.6...4.8 (0.063...0.189)	2.1...6.4 (0.083...0.252)	2.1...6.4 (0.083...0.252)	3.2...9.5 (0.126...0.374)	3.2...9.5 (0.126...0.374)
Wire cross-section range mm^2 (in^2)	0.75 ...4 (0.0011 ...0.0062)	1.5...6.4 (0.0023 ...0.0093)	1.5...6.4 (0.0023 ...0.0093))	4 ...16 (0.006 ...0.0025)	4 ...16 (0.006 ...0.0025)
Label dimensions, mm (in.)	7.6 x 50 (0.30 x 1.97)	11.3 x 12 (0.44 x 0.47)	10.7 x 50 (0.42 x 1.97)	16.1 x 12 (0.63 x 0.47)	15.1 X 50 (0.59 x 1.97)
Approximate AWG	12...18	10...16	10 ...16	6...12	6 ...12
Quantity per roll	1000	4000	1000	2000	500
Temperature, shrinkage	90 °C (194 °F)				
Ribbon/ roller	Ribbon:1492-PRIBHS, Roller: 1492-PROLLLAB				

Approximate Dimensions

Approximate dimensions are shown in millimeters (inches) and are not intended to be used for manufacturing purposes.

1492-MHS2X25

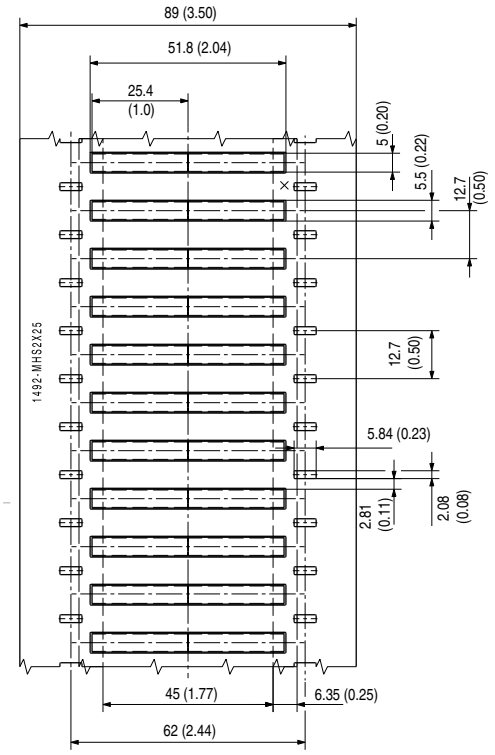

1492-MHS3X25

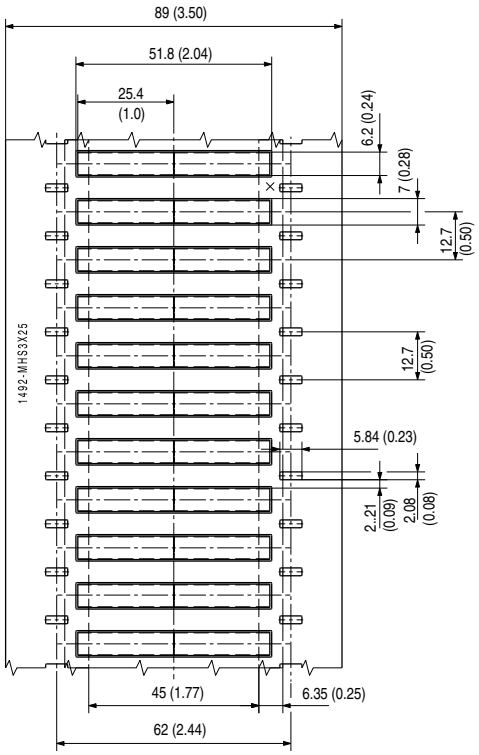

1492-MHS5X25

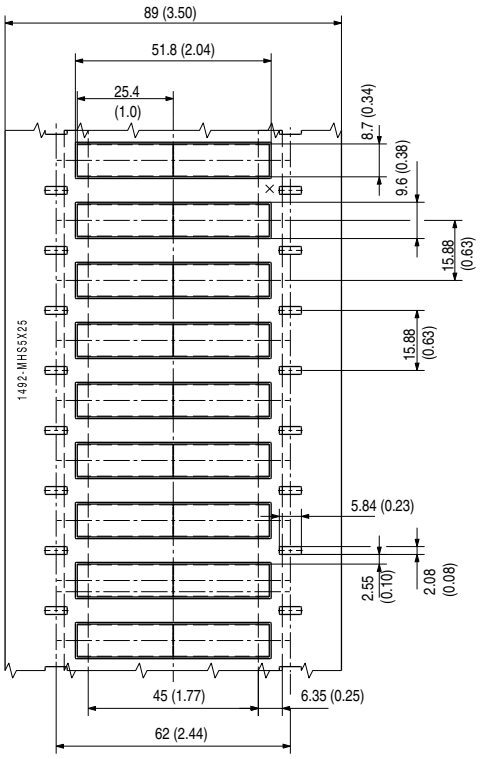

1492-MHS6X25

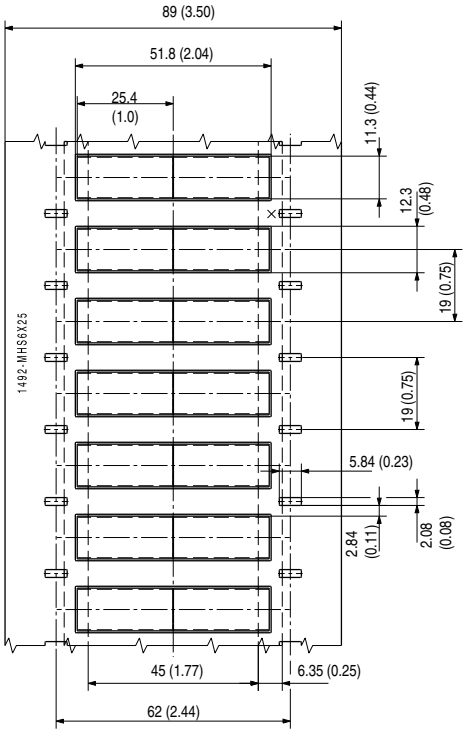

1492-MHS10X25

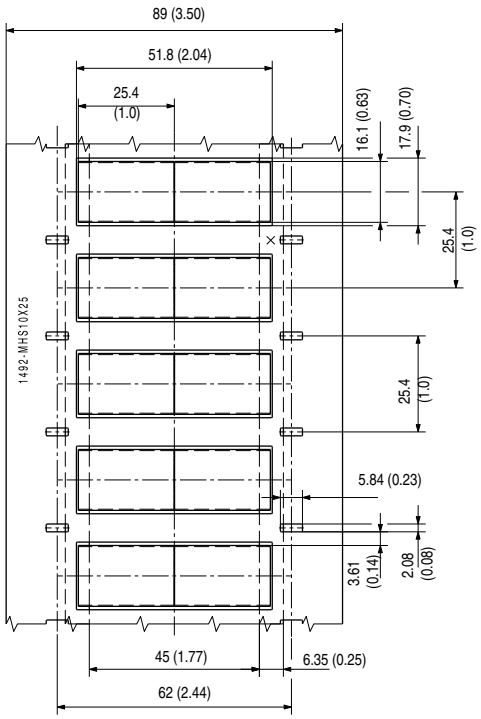

1492-MHS19X25

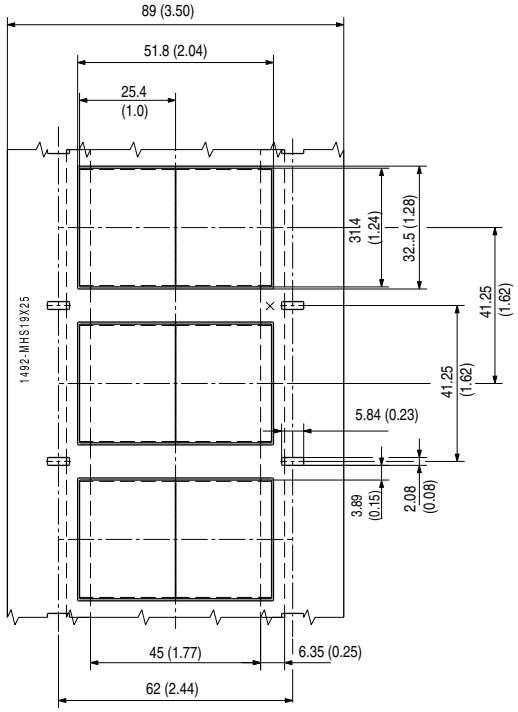

1492-MHS13X25

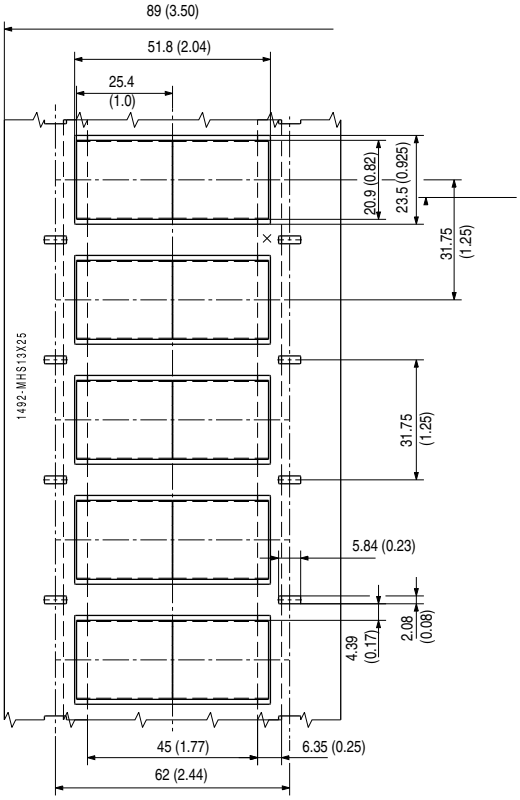

1492-MHS25X25

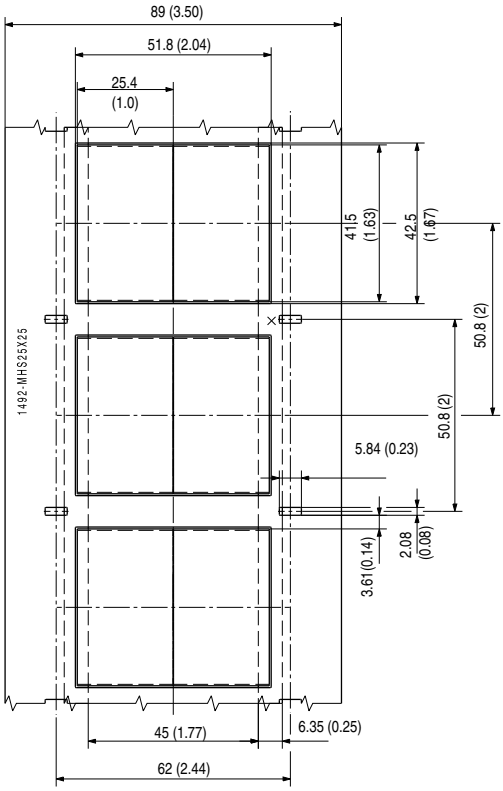

1492-MHS38X25

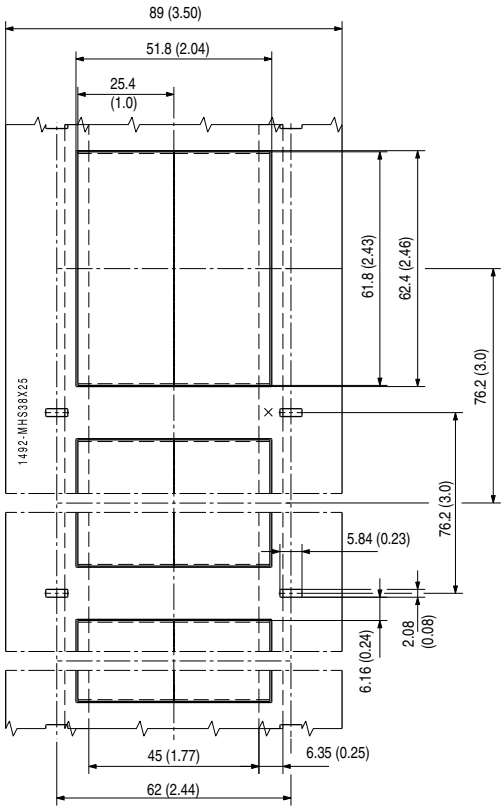

1492-MHS2X50

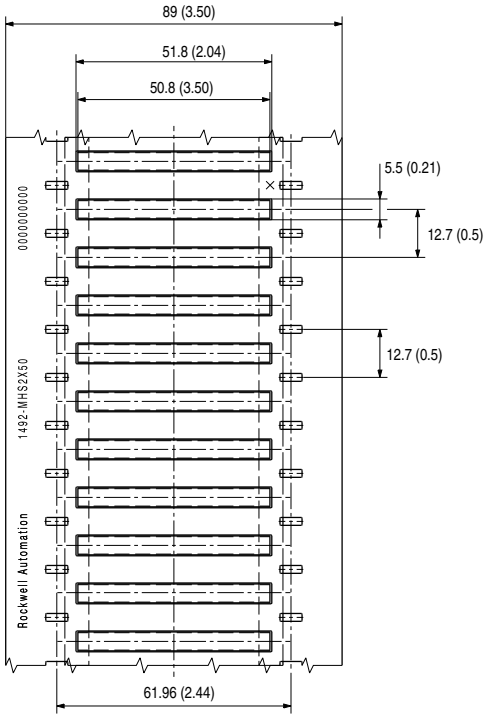

1492-MHS2X12

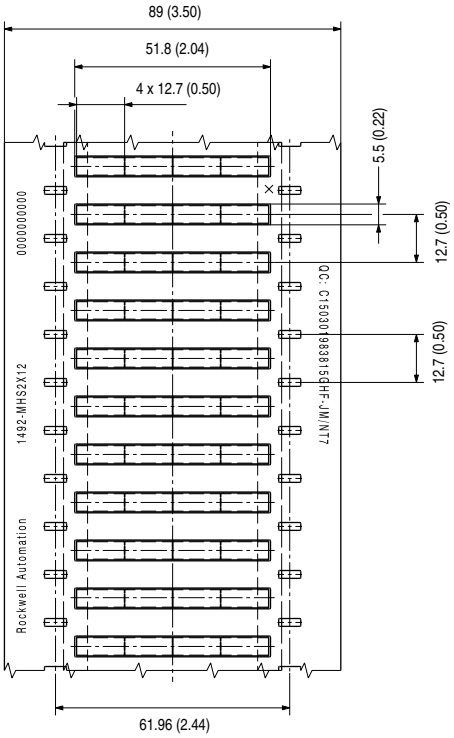

1492-MHS3X12

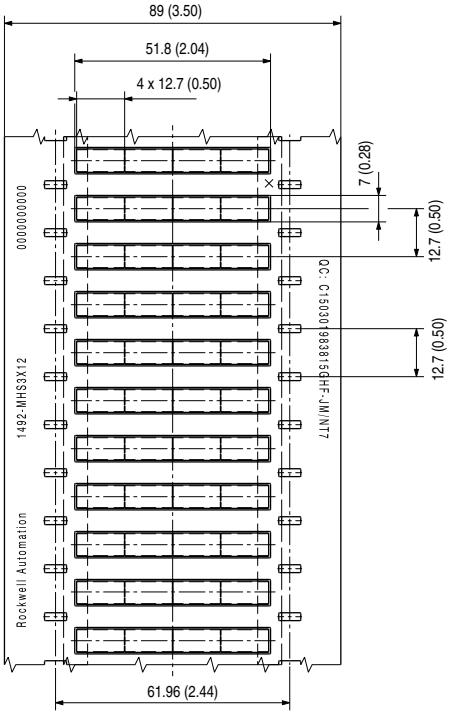

1492-MHS3X50

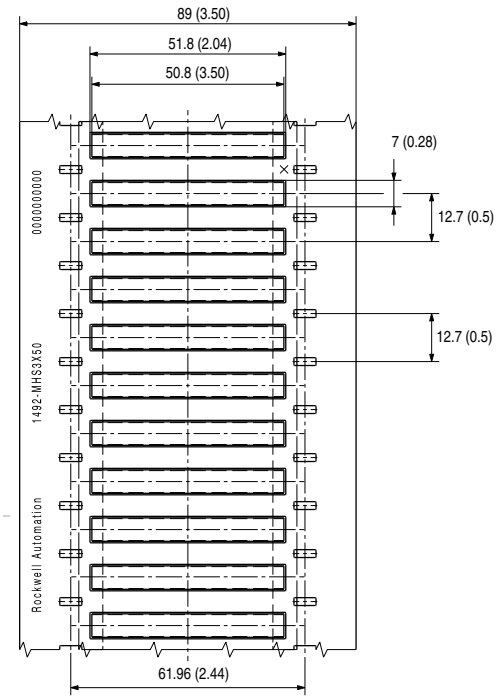

1492-MHS5X50

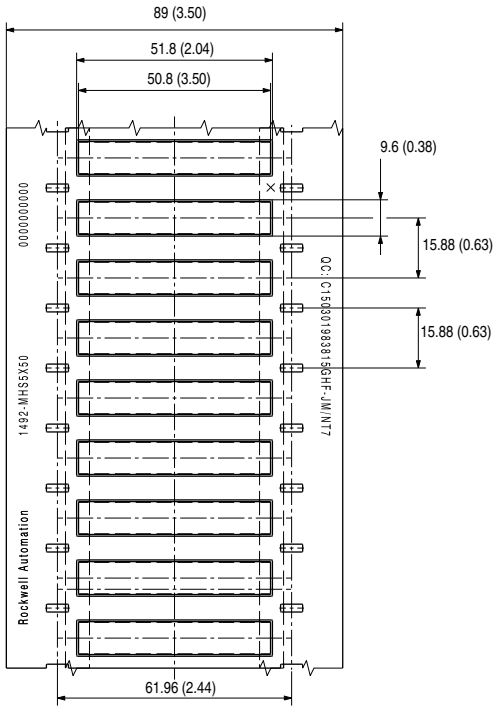

1492-MHS5X12

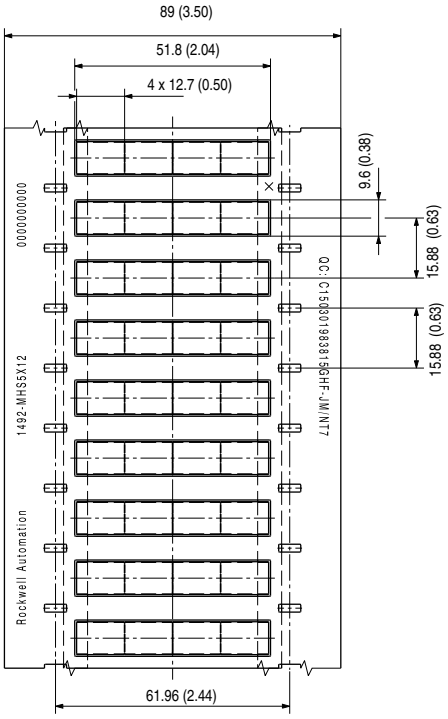

1492-MHS6X12

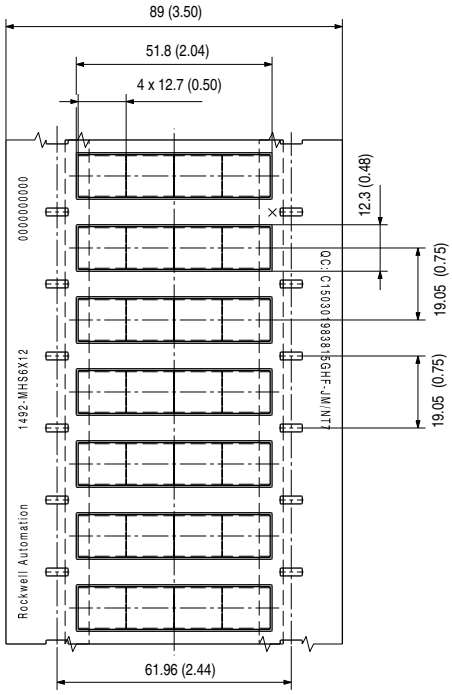

1492-MHS6X50

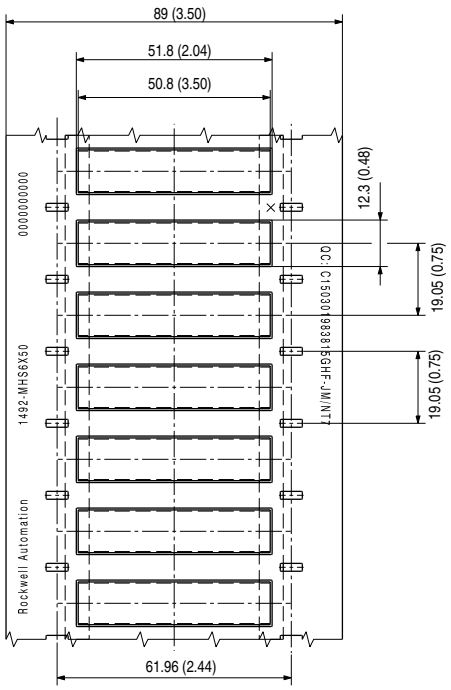

1492-MHS10X50

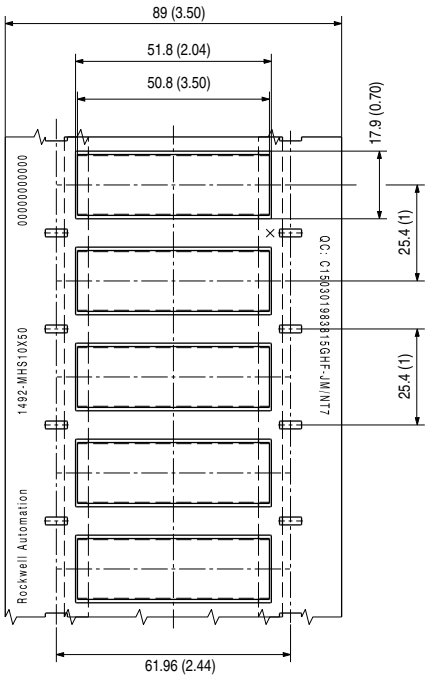

1492-MHS10X12

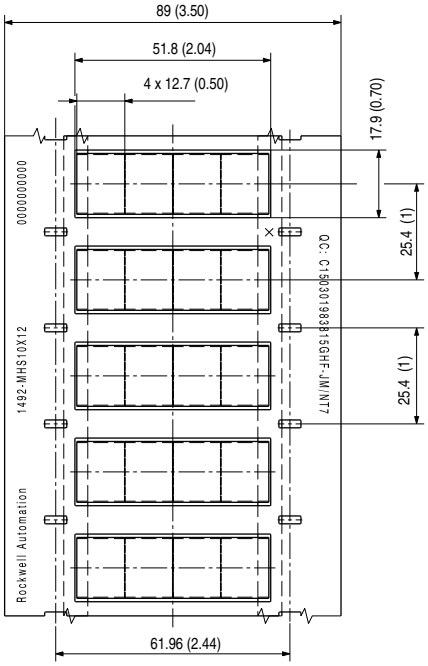

Adhesive Labels

White

Catalog Number	1492-MDM15X27-W	1492-MDM15X45-W	1492-MDM15X60-W	1492-MDM30X60-W
Labels on the roll				
Single label				
Material description	White, halogen-free polyester, with acrylate adhesive			
Label dimensions, mm (in.)	15 x 27 (0.59 x 1.06)	15 x 45 (0.59 x 1.77)	15 x 60 (0.59 x 2.36)	30 x 60 (1.18 x 2.36)
Quantity per roll	450			
Temperature, operating	-40...+120 °C (-40...+248 °F)			
Ribbon/roller	Ribbon: Cat. No.1492-PRIBLAB, Roller: Cat. No. 1492-PROLLLAB			

Catalog Number	1492-MDM85X54-W	1492-MDM6X17-W	1492-MDM8X20-W	1492-MDM9X17-W
Labels on the roll				
Single label				
Material description	White, halogen-free polyester, with acrylate adhesive			
Label dimensions, mm (in.)	85 x 54 (3.35 x 2.13)	6 x 17 (0.236 x 0.67)	8 x 20 (0.315 x 0.787)	9 x 17 (0.354 x 0.67)
Quantity per roll	450	3000		
Temperature, operating	-40...+120 °C (-40...+248 °F)			
Ribbon/roller	Ribbon: Cat. No.1492-PRIBLAB, Roller: Cat. No. 1492-PROLLLAB			

Gray

Catalog Number	1492-MDM15X27-GY	1492-MDM15X45-GY	1492-MDM15X60-GY	1492-MDM30X60-GY
Labels on the roll		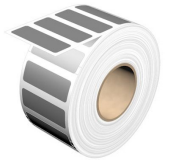	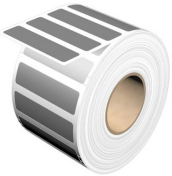	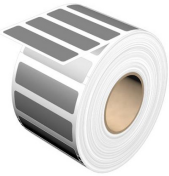
Single label				
Material description	Gray, halogen-free polyester, with acrylate adhesive			
Label dimensions, mm (in.)	15 x 27 (0.59 x 1.06)	15 x 45 (0.59 x 1.77)	15 x 60 (0.59 x 2.36)	30 x 60 (1.18 x 2.36)
Quantity per roll	450			
Temperature, operating	-40...+120 °C (-40...+248 °F)			
Ribbon/roller	Ribbon: Cat. No.1492-PRIBLAB, Roller: Cat. No. 1492-PROLLLAB			

Catalog Number	1492-MDM85X54-GY	1492-MDM6X17-GY	1492-MDM8X20-GY	1492-MDM9X17-GY
Labels on the roll	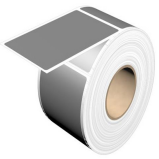			
Single label				
Material description	Gray, halogen-free polyester, with acrylate adhesive			
Label dimensions, mm (in.)	85 x 54 (3.35 x 2.13)	6 x 17 (0.236 x 0.67)	8 x 20 (0.315 x 0.787)	9 x 17 (0.354 x 0.67)
Quantity per roll	450	3000		
Temperature, operating	-40...+120 °C (-40...+248 °F)			
Ribbon/roller	Ribbon: Cat. No.1492-PRIBLAB, Roller: Cat. No. 1492-PROLLLAB			

Approximate Dimensions

Approximate dimensions are shown in millimeters (inches) and are not intended to be used for manufacturing purposes.

1492-MDM15X27-...

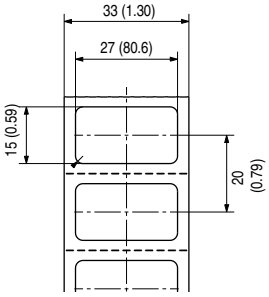

1492-MDM15X45-...

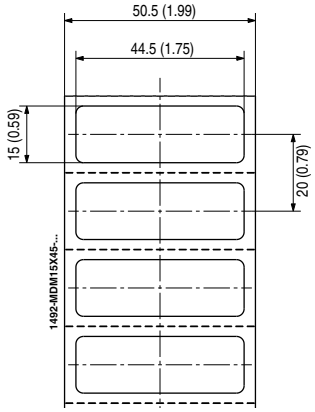

1492-MDM15X60

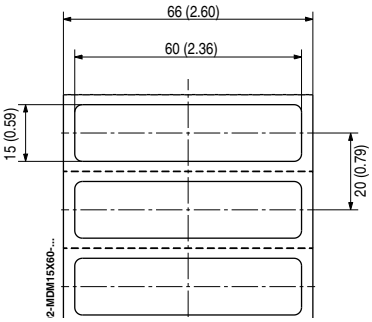

1492-MDM30X60-...

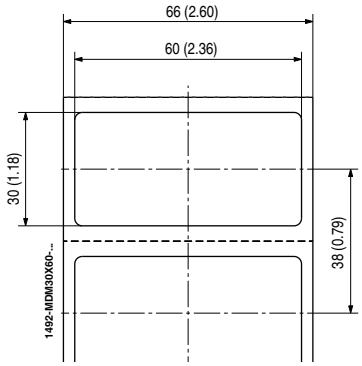

1492-MDM85X54-...

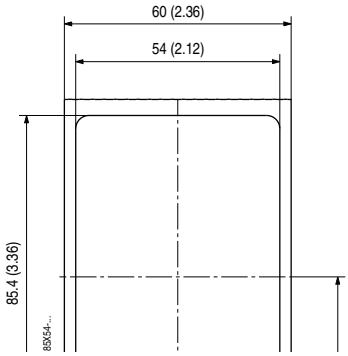

1492-MDM6X17-...

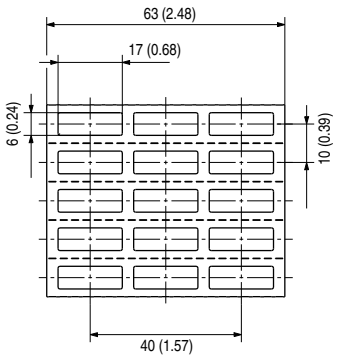

1492-MDM8X20-...

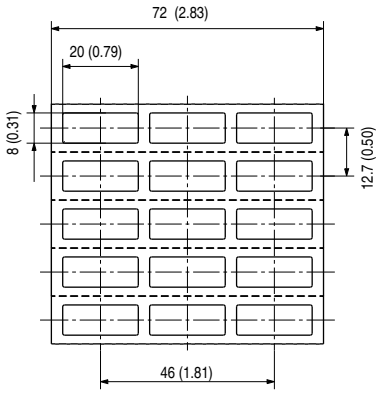

1492-MDM9X17-...

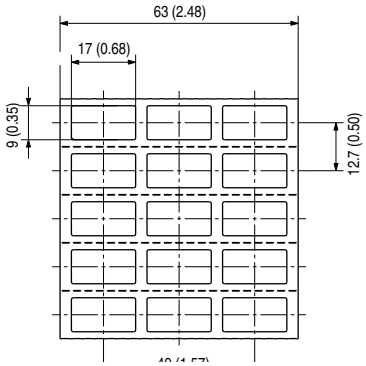

Marker Tags on a Spool Compatible with 1492-J,L Terminal Blocks

Catalog Number	1492-MT3X5	1492-MT5X5	1492-MT6X5	1492-MT8X5	1492-MT5X10
Material description	White, PC-ABS, TPU, halogen-free, clip-in foot				
Label dimensions, mm (in.)	3 x 5 (0.138 x 0.197)	5 x 5 (0.197 x 0.197)	6 x 5 (0.236 x 0.197)	8 x 5 (0.315 x 0.197)	5 x 10 (0.20 x 0.39)
Quantity per roll	1000	800	600	500	820
Temperature, operating	-50...+90 °C (-58...+194 °F)				
Ribbon/roller	Ribbon: Cat. No. 1492-PRIBTB/ Roller: 1492-PROLLTB				

Catalog Number	1492-MT3X12	1492-MT5X12	1492-MT6X12	1492-MT8X12	1492-MT6X10
Material description	White, PC-ABS, TPU, halogen-free, clip-in foot				
Color	White				
Label dimensions, mm (in.)	3 .5 x 12 (0.138 x 0.472)	5 x 12 (0.197 x 0.472)	6 x 12 (0.236 x 0.472)	8 x 12 (0.315 x 0.472)	6 x 10 (0.24 x 0.39)
Quantity per roll	1000	800	600	500	620
Temperature, operating	-50...+90 °C (-58...+194 °F)				
Ribbon/roller	Ribbon: Cat. No. 1492-PRIBTB/ Roller: 1492-PROLLTB				

Catalog Number	1492-MT5X12-BP	1492-MT6X12-BP
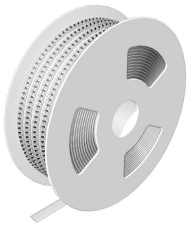		
Material description	White, PC-ABS, TPU, halogen-free, clip-in foot	
Label dimensions, mm (in.)	5 x 12 (0.197 x 0.472)	6 x 12 (0.236 x 0.472)
Quantity per roll	5500	4500
Temperature, operating	-50...+90 °C (-58...+194 °F)	
Ribbon/roller	Ribbon: Cat. No. 1492-PRIBTB/ Roller: 1492-PROLLTB	
External Roll Holder	Cat. No. 1492-PEXTRH	

Approximate Dimensions

Approximate dimensions are shown in millimeters (inches) and are not intended to be used for manufacturing purposes.

1492-MT3X5

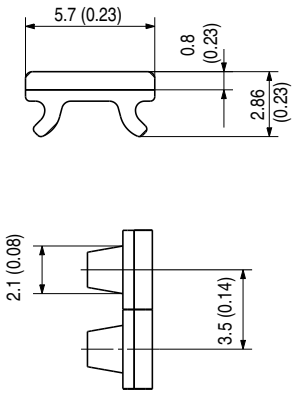

1492-MT5X5

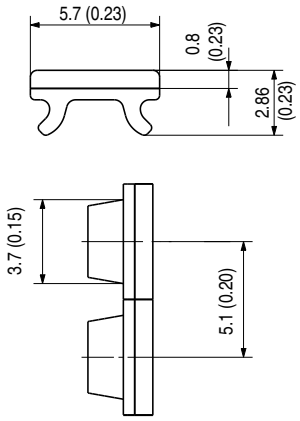

1492-MT6X5

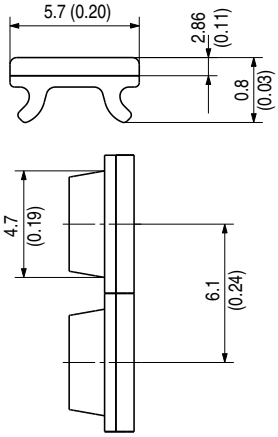

1492-MT8X5

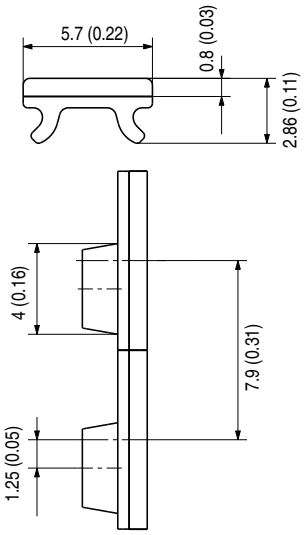

1492-MT5X10

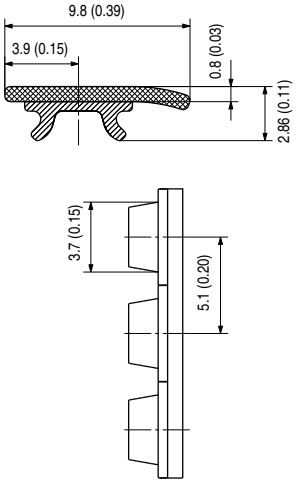

1492-MT3X12

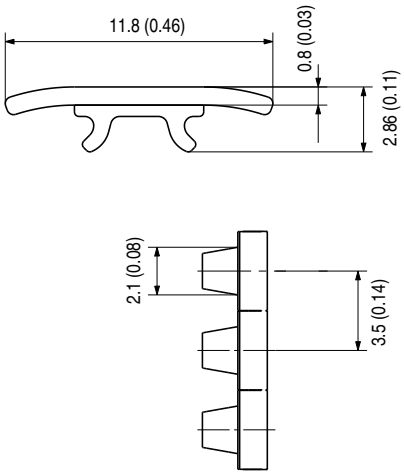

1492-MT5X12

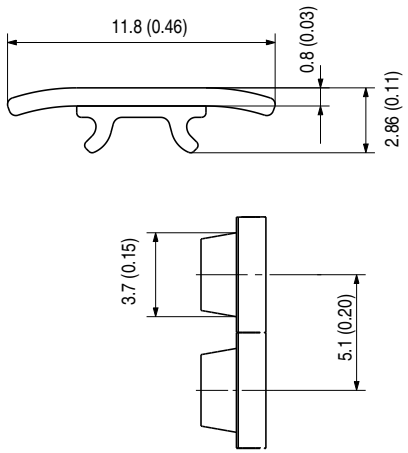

1492-MT6X12

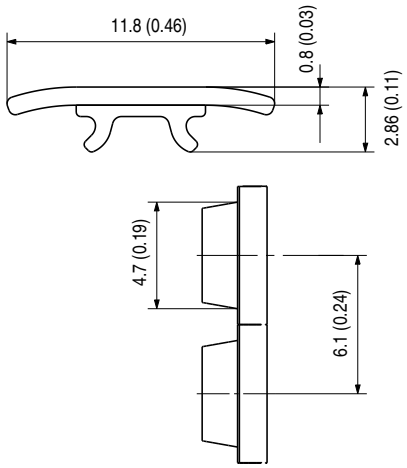

1492-MT8X12

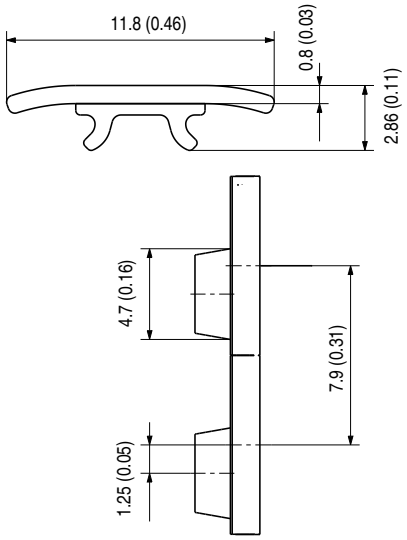

1492-MT6X10

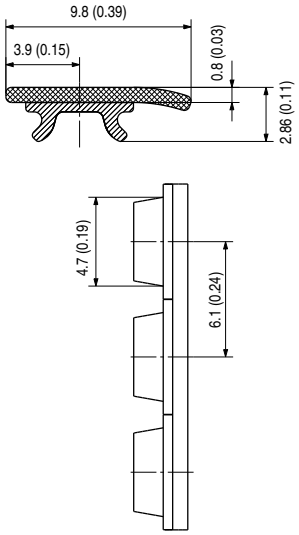

1492-MT5X12-BP

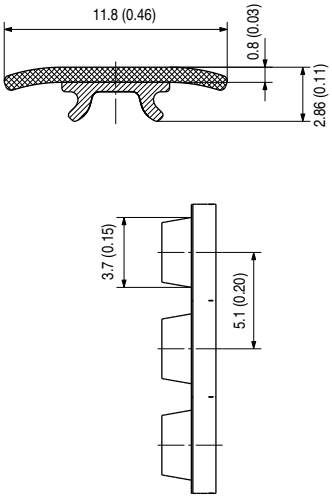

1492-MT6X12-BP

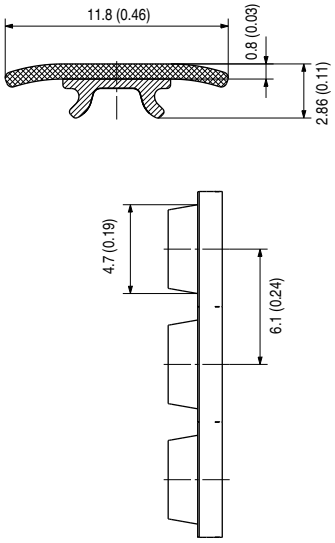

Marker Tags on a Spool Compatible with 1492-P Push-inTerminal Blocks

Catalog Number	1492-MT3X8	1492-MT5X8	1492-MT6X8	1492-MT8X8
Material description	White, PC-ABS, TPU, halogen-free, clip-in foot			
Label dimensions, mm (in.)	3 .5 x 8 (0.138 x 0.315)	5 x 8 (0.197 x 0.315)	6 x 8 (0.236 x 0.315)	8 x 8 (0.315 x 0.315)
Quantity per roll	1000	800	600	500
Temperature, operating	-50...+90 °C (-58...+94 °F)			
Ribbon/roller	Ribbon: Cat. No. 1492-PRIBTB/ Roller: 1492-PROLLTB			

Catalog Number	1492-MT10X8	1492-MT12X8	1492-MT16X8
Material description	White, PC-ABS, TPU, halogen-free, clip-in foot		
Label dimensions, mm (in.)	10 x 8 (0.39 x 0.31)	12 x 8 (0.47 x 0.31)	16 x 8 (0.63 x 0.31)
Quantity per roll	370	320	220
Temperature, operating	-50...+90 °C (-58...+194 °F)		
Ribbon/roller	Ribbon: Cat. No. 1492-PRIBTB/ Roller: 1492-PROLLTB		

Approximate Dimensions

Approximate dimensions are shown in millimeters (inches) and are not intended to be used for manufacturing purposes.

1492-MT3X8

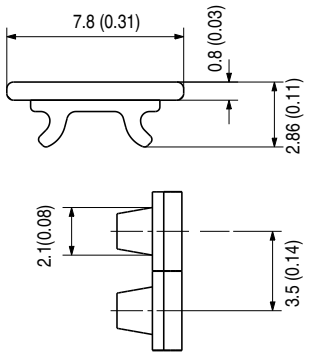

1492-MT5X8

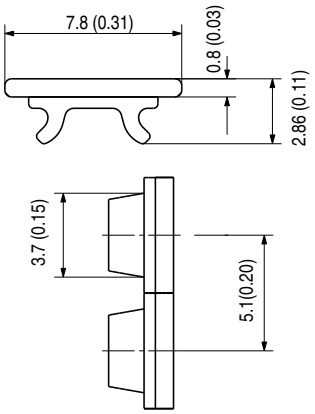

1492-MT6X8

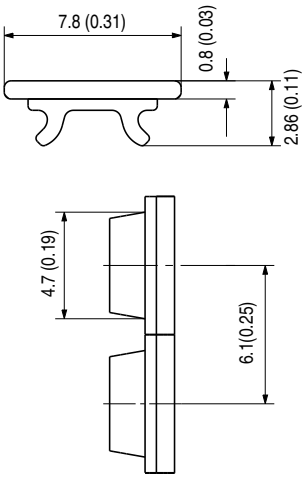

1492-MT8X8

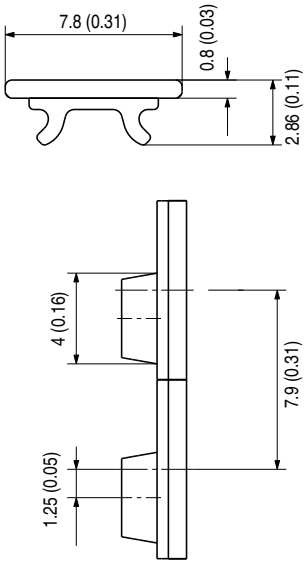

1492-MT10X8

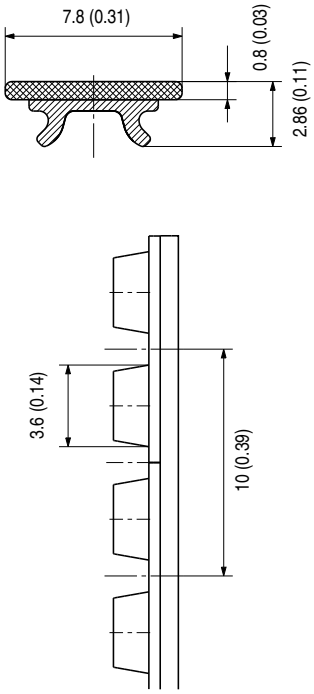

1492-MT16X8

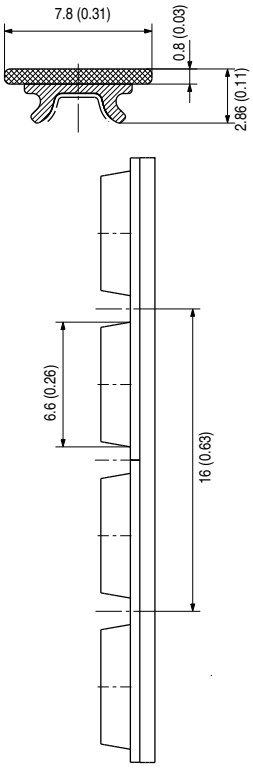

1492-MT12X8

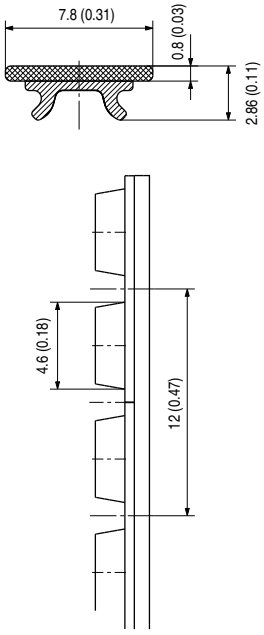

Marker Tags on a Spool Compatible with 1492-W Terminal Blocks

Catalog Number	1492-MTW5X9	1492-MTW6X9	1492-MTW8X9
Material description	White, PC-ABS, TPU, halogen-free, clip-in foot		
Label dimensions, mm (in.)	5 x 9 (0.20 x 0.35)	6 x 9 (0.24 x 0.35)	8 x 9 (0.31 x 0.35)
Quantity per roll	620	520	420
Temperature, operating	-50...+90 °C (-58...+194 °F)		
Ribbon/roller	Ribbon: Cat. No. 1492-PRIBTB Roller: 1492-PROLLTBW5/6/8X9		

Catalog Number	1492-MTW5X12	1492-MTW6X12	1492-MTW8X12
Material description	White, PC-ABS, TPU, halogen-free, clip-in foot		
Label dimensions, mm (in.)	5 x 12 (0.197 x 0.472)	6 x 12 (0.236 x 0.472)	8 x 12 (0.315 x 0.472)
Quantity per roll	620	520	420
Temperature, operating	-50...+90 °C (-58...+194 °F)		
Ribbon/roller	Ribbon: Cat. No. 1492-PRIBTB Roller: 1492-PROLLTBW5/6/8X12		

Approximate Dimensions

Approximate dimensions are shown in millimeters (inches) and are not intended to be used for manufacturing purposes.

1492-MTW5X9

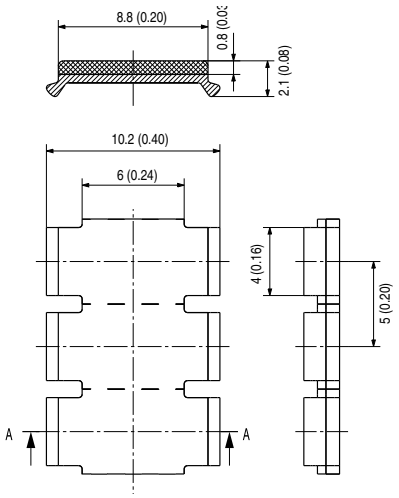

1492-MTW8X9

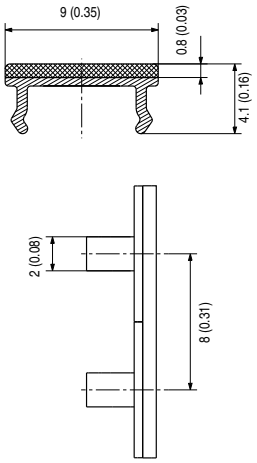

1492-MTW6X12

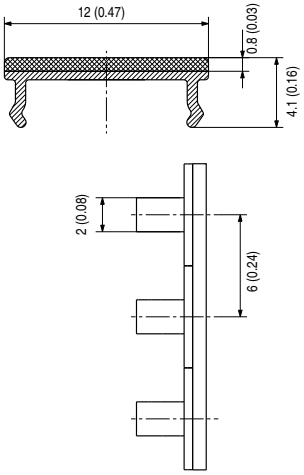

1492-MTW6X9

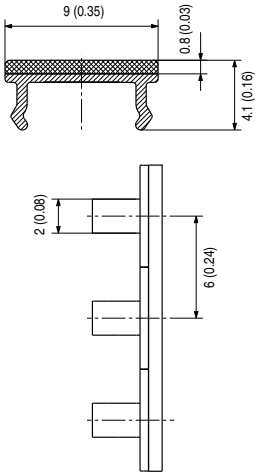

1492-MTW5X12

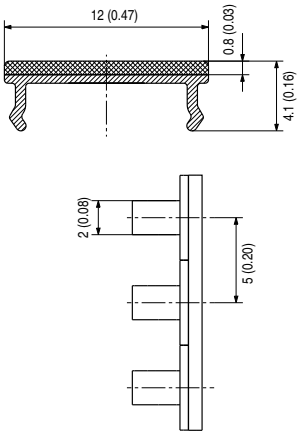

1492-MTW8X12

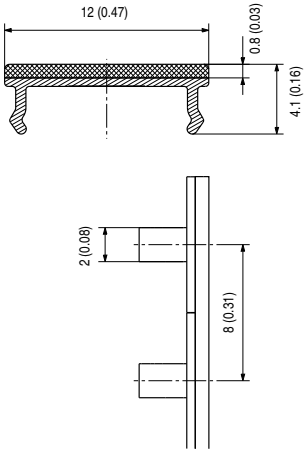

Marker Tags on a Spool Compatible with Phoenix Contact Terminal Blocks

Catalog Number	1492-MTCPC5X5	1492-MTCPC6X5	1492-MTCPC5X10	1492-MTCPC6X10
Material description	White, PC-ABS, TPU, halogen-free, clip-in foot			
Label dimensions, mm (in.)	5 x 5 (0.20 x 0.20)	6 x 5 (0.24 x 0.20)	5 x 10 (0.20 x 0.39)	6 x 10 (0.24 x 0.39)
Quantity per roll	1220	1020	620	520
Temperature, operating	-50...+90 °C (-58...+194 °F)			
Ribbon/roller	Ribbon: Cat. No. 1492-PRIBTB/ Roller: 1492-PROLLTBCPC			

Catalog Number	1492-MTCPC8X10	1492-MTCPC5X8
Material description	White, PC-ABS, TPU, halogen-free, clip-in foot	
Label dimensions, mm (in.)	8 x 10 (0.31 x 0.39)	5 x 8 (0.20 x 0.31)
Quantity per roll	420	620
Temperature, operating	-50...+90 °C (-58...+194 °F)	
Ribbon/roller	Ribbon: Cat. No. 1492-PRIBTB/ Roller: 1492-PROLLTBCPC	

Approximate Dimensions

Approximate dimensions are shown in millimeters (inches) and are not intended to be used for manufacturing purposes.

1492-MTCPC5X5

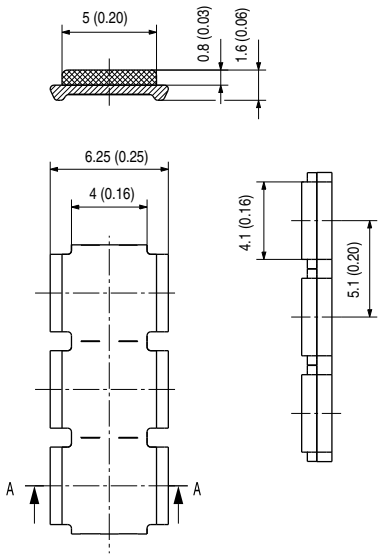

1492-MTCPC5X10

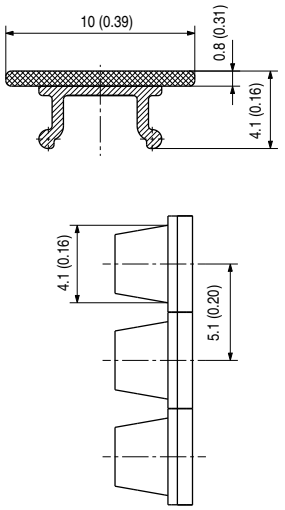

1492-MTCPC6X5

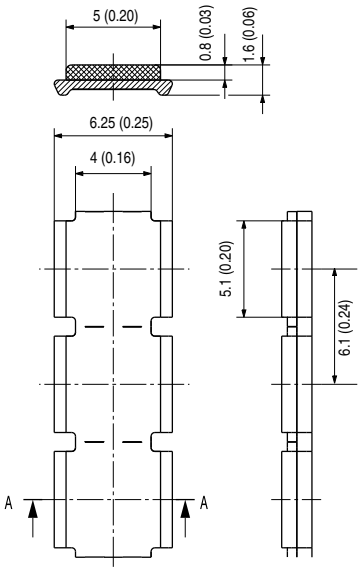

1492-MTCPC6X10

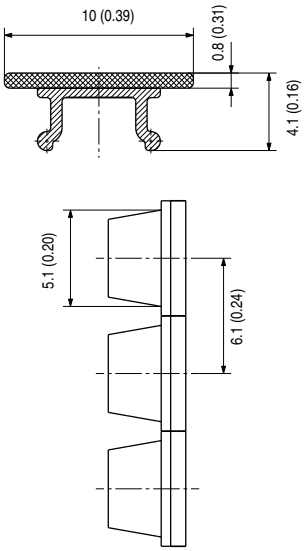

1492-MTCPC8X10

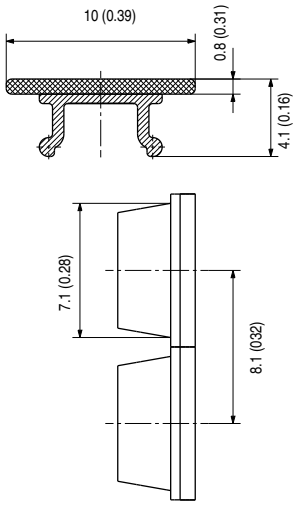

1492-MTCPC5X8

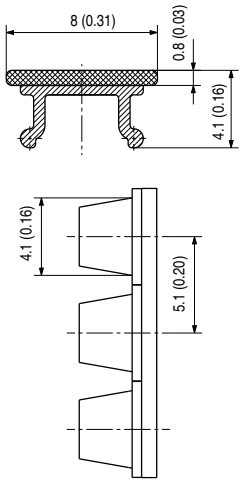

Marker Tags on a Spool Compatible with Wago Terminal Blocks

Catalog Number	1492-MTCW5X5	1492-MTCW5X9	1492-MTCW5X9F
Material description	White, PC-ABS, TPU, halogen-free, clip-in foot		
Label dimensions, mm (in.)	5 x 5 (0.20 x 0.20)	5 x 9 (0.20 x 0.35)	5 x 9 (0.20 x 0.35)
Quantity per roll	820	1220	820
Temperature, operating	-50...+90 °C (-58...+194 °F)		
Ribbon/roller	Ribbon: Cat. No. 1492-PRIBTB/ Roller: 1492-PROLLTBCW		

Approximate Dimensions

Approximate dimensions are shown in millimeters (inches) and are not intended to be used for manufacturing purposes.

1492-MTCW5X5

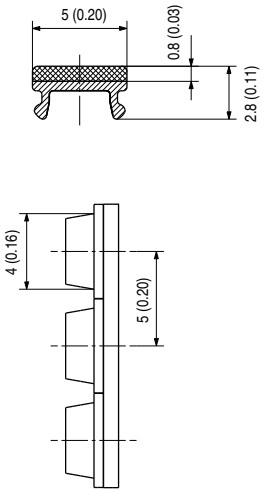

1492-MTCW5X9F

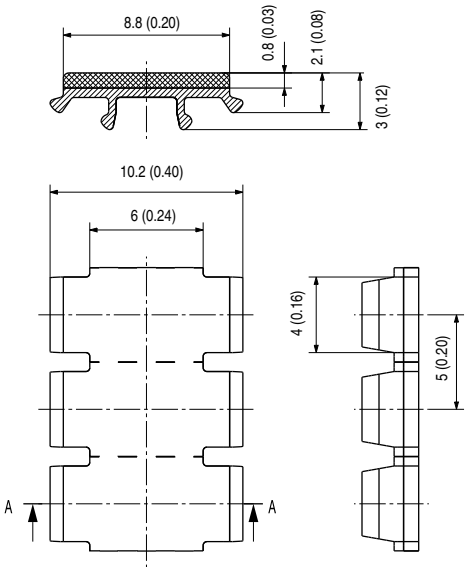

1492-MTCW5X9

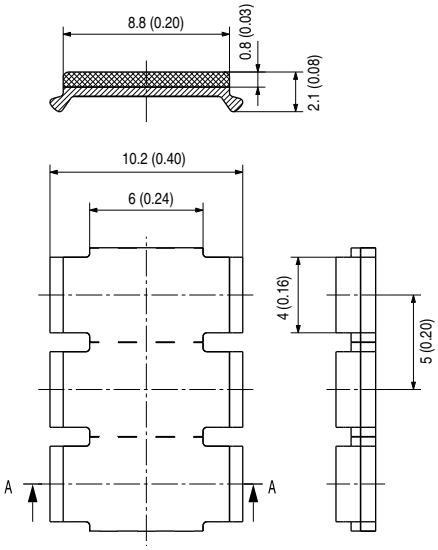

Inlay Tags on a Spool

Catalog Number	1492-MGT6X30
Labels on the roll	
Single label	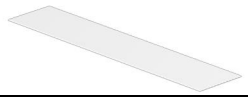
Material description	White polyester
Used with	Cat. Nos. 1492-GM8X30, 1492-MWCTC8X30
Label dimensions mm (in.)	6 x 30 (0.236 x 1.18)
Quantity per roll	3000
Temperature, operating	-50...+140 °C (-58...+284 °F)
Ribbon	1492-PRIBLAB
Roller	1492-PROLLLAB

Transparent End Anchor Markers

Catalog Number	1492-GM8X30
Material	Transparent polypropylene
Used with	Cat. No. 1492-MGT6X30
Marker dimensions mm (in.)	7.2 x 32.4 (0.236 x 1.28)
Height mm (in.)	3 (0.118)
Quantity per roll	50
Temperature, operating	-50...+80 °C (-58...+176 °F)

Transparent Wire Markers

Catalog Number	1492-MWCTC8X30
Material	Polypropylene
Used with	1492-MGT6X30
Color	Transparent
Wire O.D. range, mm (in.)	7...115 (0.275...4.53)
Wire cross section range, mm^2 (in^2)	16...150 (0.025...0.233)
Marker dimensions	8 x 30 mm (0.315 x 1.18)
Marker height	3.5 (0.138)
Quantity per roll	50
Temperature, operating	-50...+80 °C (-58...+176 °F)

Approximate Dimensions

Approximate dimensions are shown in millimeters (inches) and are not intended to be used for manufacturing purposes.

1492-MGT6X30

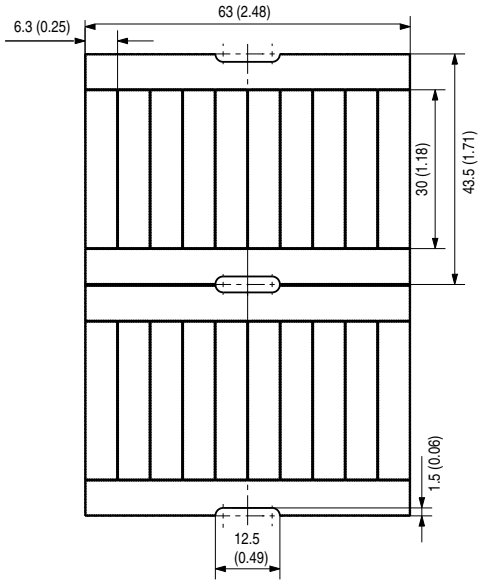

1492-GM8X30

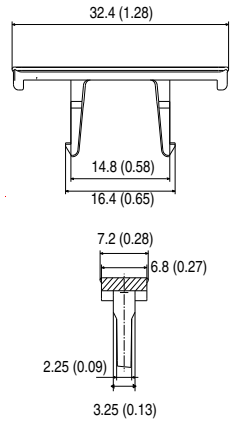

1492-MWCTC8X30

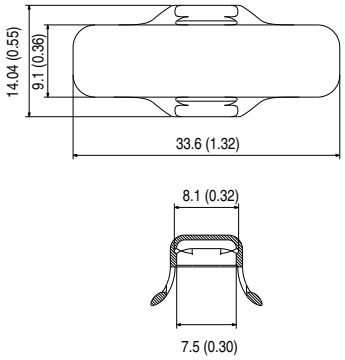

Notes:

Additional Resources

These documents contain additional information concerning related products from Rockwell Automation.

Resource	Description
ClearMultiprint Marking Systems Quick Start publication 1492-QS003	Provides installation, configuration and maintenance information.
EtherNet/IP Network Devices User Manual, ENET-UM006	Describes how to configure and use EtherNet/IP devices to communicate on the EtherNet/IP network.
Ethernet Reference Manual, ENET-RM002	Describes basic Ethernet concepts, infrastructure components, and infrastructure features.
System Security Design Guidelines Reference Manual, SECURE-RM001	Provides guidance on how to conduct security assessments, implement Rockwell Automation products in a secure system, harden the control system, manage user access, and dispose of equipment.
Industrial Components Preventive Maintenance, Enclosures, and Contact Ratings Specifications, publication IC-TD002	Provides a quick reference tool for Allen-Bradley industrial automation controls and assemblies.
Safety Guidelines for the Application, Installation, and Maintenance of Solid-state Control, publication SGI-1.1	Designed to harmonize with NEMA Standards Publication No. ICS 1.1-1987 and provides general guidelines for the application, installation, and maintenance of solid-state control in the form of individual devices or packaged assemblies incorporating solid-state components.
Industrial Automation Wiring and Grounding Guidelines, publication 1770-4.1	Provides general guidelines for installing a Rockwell Automation industrial system.
Product Certifications website, rok.auto/certifications.	Provides declarations of conformity, certificates, and other certification details.

You can view or download publications at rok.auto/literature.

Rockwell Automation Support

Use these resources to access support information.

Technical Support Center	Find help with how-to videos, FAQs, chat, user forums, and product notification updates.	rok.auto/support
Knowledgebase	Access Knowledgebase articles.	rok.auto/knowledgebase
Local Technical Support Phone Numbers	Locate the telephone number for your country.	rok.auto/phonesupport
Literature Library	Find installation instructions, manuals, brochures, and technical data publications.	rok.auto/literature
Product Compatibility and Download Center (PCDC)	Download firmware, associated files (such as AOP, EDS, and DTM), and access product release notes.	rok.auto/pcdc

Documentation Feedback

Your comments help us serve your documentation needs better. If you have any suggestions on how to improve our content, complete the form at rok.auto/docfeedback.

Allen-Bradley, expanding human possibility, FactoryTalk, and Rockwell Automation are trademarks of Rockwell Automation, Inc.
EtherNet/IP is a trademark of ODVA, Inc.
Trademarks not belonging to Rockwell Automation are property of their respective companies.

Rockwell Automation maintains current product environmental compliance information on its website at rok.auto/pec.

Rockwell Otomasyon Ticaret A.Ş. Kar Plaza İş Merkezi E Blok Kat:6 34752, İçerenköy, İstanbul, Tel: +90 (216) 5698400 EEE Yönetmeliğine Uygundur

Connect with us.

rockwellautomation.com expanding **human possibility**™

AMERICAS: Rockwell Automation, 1201 South Second Street, Milwaukee, WI 53204-2496 USA, Tel: (1) 414.382.2000, Fax: (1) 414.382.4444
EUROPE/MIDDLE EAST/AFRICA: Rockwell Automation NV, Pegasus Park, De Kleetlaan 12a, 1831 Diegem, Belgium, Tel: (32) 2 663 0600, Fax: (32) 2 663 0640
ASIA PACIFIC: Rockwell Automation, Level 14, Core F, Cyberport 3, 100 Cyberport Road, Hong Kong, Tel: (852) 2887 4788, Fax: (852) 2508 1846

Publication 1492-TD016B-EN-P - January 2021
Supersedes Publication 1492-TD016A-EN-P - February 2017

Copyright © 2021 Rockwell Automation, Inc. All rights reserved. Printed in the U.S.A.