Installation Instructions

Bulletin 194U

160 A Door Mount Handles
160A Griffe für Türmontage
160A Poignées de porte fixées
Maniglie di montaggio sportello 160A
Manijas para montaje en puertas de 160 A
Устанавливаемые на двери рукоятки 160 A
160A 门把手

(Cat 194U-FB, 194U-FY, 194U-DMA)

WARNING: To prevent electrical shock, disconnect from power source before installing or servicing. Install in suitable enclosure. Keep free from contaminants.

WARNUNG: Vor Installations- oder Servicearbeiten Stromversorgung unterbrechen, um Unfälle zu vermeiden. Die Geräte müssen in einem passenden Gehäuse eingebau und gegen Verschmutzung geschützt werden.

AVERTISSEMENT: Avant le montage et la mise en service, couper l'alimentation secteur afin d'éviter tout accident. Prévoir une mise en coffret ou armoire appropriée. Protéger le produit contre les environnements agressifs.

AVVERTENZA: Per prevenire infortuni, togliere tensione prima dell'installazione o manutenzione. Installare in custodia indonea. Tenere lontano da contaminanti.

ADVERTENCIA: Desconectar la alimentación eléctrica antes de realizar el montaje y la puesta en servicio, con el objeto de evitar accidentes. Instalado en una caja o armari apropiado. Proteger el producto de los ambientes agresivos.

ПРЕДУПРЕЖДЕНИЕ: Во избежание поражения электрическим током, отсоединить от источника питания перед установкой или обслуживанием. Устанавливать в соответствующем корпусе. Предохранять от загрязнений.

警告：为了防止触电．在安装或维修之前必须先切断电源．安装在合适的设备箱内．防止接触污染物。

UL type 1, 3R, 12, 4, 4X
IP66
Product of Finland

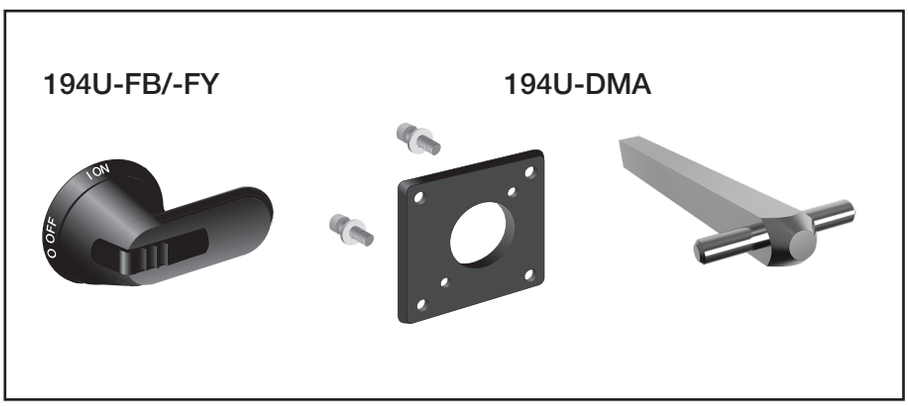

Handle Assembly

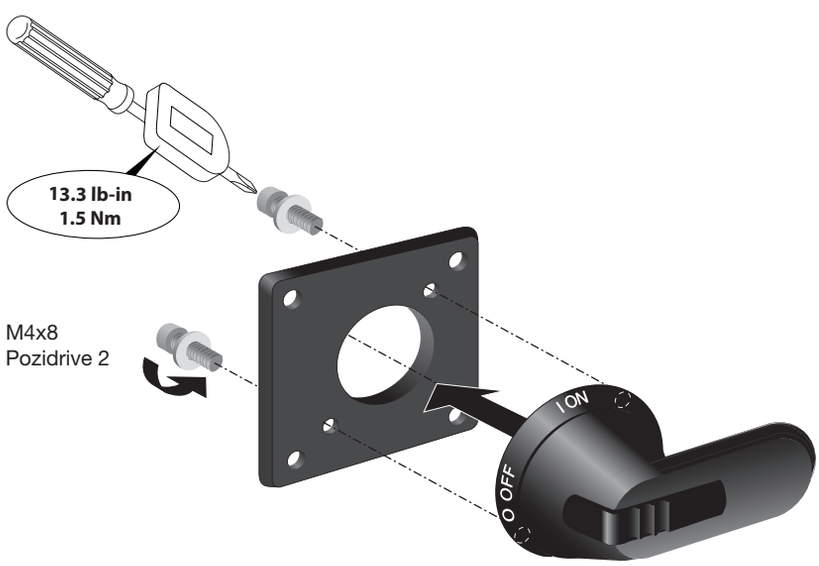

Door mounting

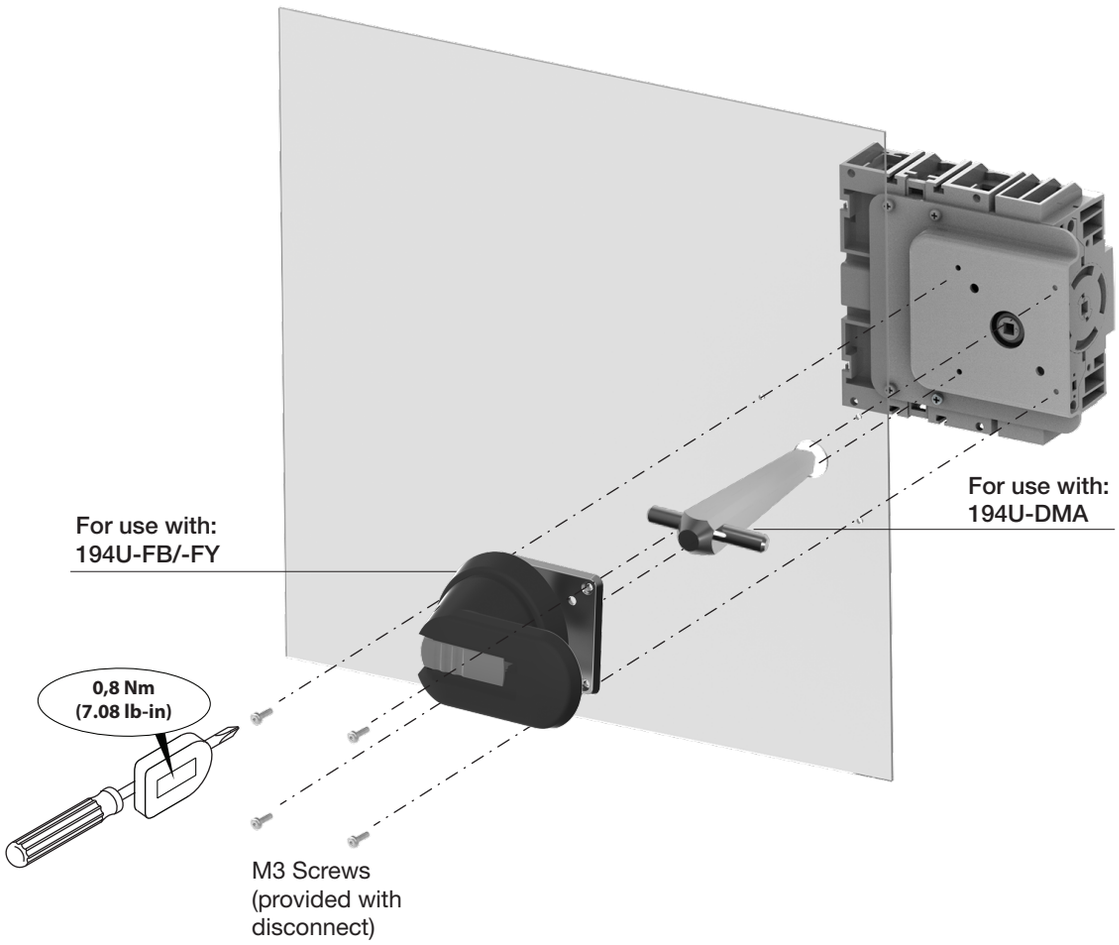

Rockwell Automation maintains current product environmental information on its website at http://www.rockwellautomation.com/rockwellautomation/about-us/sustainability-ethics/product-environmental-compliance.page.

Allen-Bradley, Rockwell Software, and Rockwell Automation are trademarks of Rockwell Automation, Inc.
Trademarks not belonging to Rockwell Automation are property of their respective companies.

www.rockwellautomation.com

Power, Control and Information Solutions Headquarters

Americas: Rockwell Automation, 1201 South Second Street, Milwaukee, WI 53204-2496 USA, Tel: (1) 414.382.2000, Fax: (1) 414.382.4444
Europe/Middle East/Africa: Rockwell Automation NV, Pegasus Park, De Kleetlaan 12a, 1831 Diegem, Belgium, Tel: (32) 2 663 0600, Fax: (32) 2 663 0640
Asia Pacific: Rockwell Automation, Level 14, Core F, Cyberport 3, 100 Cyberport Road, Hong Kong, Tel: (852) 2887 4788, Fax: (852) 2508 1846

DIR 10002580547 **(Version 01)**
Copyright © 2016 Rockwell Automation, Inc. All Rights Reserved. Printed in Finland.

Publication **194U-IN007B-EN-E - October 2017**