Installation Instructions

FLEX Ex 8 Input Analog, HART, and Noise Filter Analog Modules

Catalog Numbers 1797-IE8, 1797-IE8H, 1797-IE8NF

Topic	Page
Important User Information	3
Environment and Enclosure	4
Prevent Electrostatic Discharge	5
Removal and Insertion Under Power	5
EMC Directive	6
Installation in Zone 1	8
Installation in Zone 22	8
Install the Module	9
Wire the Module to a 1797-TB3 or 1797-TB3S Terminal Base Unit	11
Ground the Module	13
Inputs	13
1797-IE8 and 1797-IE8NF Input Map (Read Words)	17
1797-IE8H Input Map (Read Words)	18
1797-IE8H Input Map (Read Words)	19
1797-IE8 and 1797-IE8NF Output Map (Write Words)	20
1797-IE8H Output Configuration Map	20
Fault Mode - Write Words 0 and 1	23
“Add-on” Filter Selections - Write Words 0 and 1 or Filter Cutoff Selections	23

Allen-Bradley • Rockwell Software

Rockwell Automation

Topic	Page
Remote Transmitter Error Up/Down - Write Words 0 and 1	23
Data Format - Write Words 0 and 1	23
Data Format - Write Words 2 and 3	24
Error Level 0.1 mA Steps	25
1797-IE8H Secondary Master Enable (SME)/ Primary Master Inhibit (PMI)	26
Byte Order Configuration	27
Digital Filter	27
HART Input Data	31
HART Input Data Descriptions	35
HART Read Back Threshold	36
Square Root Threshold	36
Field Descriptions	28
Repair	37
Status Indicators	37
Specifications	38
Entity Parameters	42

Important User Information

Solid state equipment has operational characteristics differing from those of electromechanical equipment. Safety Guidelines for the Application, Installation and Maintenance of Solid State Controls (Publication SGI-1.1 available from your local Rockwell Automation sales office or online at http://literature.rockwellautomation.com) describes some important differences between solid state equipment and hard-wired electromechanical devices. Because of this difference, and also because of the wide variety of uses for solid state equipment, all persons responsible for applying this equipment must satisfy themselves that each intended application of this equipment is acceptable.

In no event will Rockwell Automation, Inc. be responsible or liable for indirect or consequential damages resulting from the use or application of this equipment.

The examples and diagrams in this manual are included solely for illustrative purposes. Because of the many variables and requirements associated with any particular installation, Rockwell Automation, Inc. cannot assume responsibility or liability for actual use based on the examples and diagrams.

No patent liability is assumed by Rockwell Automation, Inc. with respect to use of information, circuits, equipment, or software described in this manual.

Reproduction of the contents of this manual, in whole or in part, without written permission of Rockwell Automation, Inc., is prohibited.

Throughout this manual, when necessary, we use notes to make you aware of safety considerations.

WARNING	Identifies information about practices or circumstances that can cause an explosion in a hazardous environment, which may lead to personal injury or death, property damage, or economic loss.
IMPORTANT	Identifies information that is critical for successful application and understanding of the product.
ATTENTION	Identifies information about practices or circumstances that can lead to personal injury or death, property damage, or economic loss. Attentions help you identify a hazard, avoid a hazard, and recognize the consequences.
SHOCK HAZARD	Labels may be located on or inside the equipment (for example, drive or motor) to alert people that dangerous voltage may be present.
BURN HAZARD	Labels may be located on or inside the equipment (for example, drive or motor) to alert people that surfaces may be dangerous temperatures.

Environment and Enclosure

ATTENTION

This equipment is intended for use in a Pollution Degree 2 industrial environment, in overvoltage Category II applications (as defined in IEC 60664-1), at altitudes up to 2000 m (6562 ft) without derating.

This equipment is considered Group 1, Class A industrial equipment according to IEC/CISPR 11. Without appropriate precautions, there may be difficulties with electromagnetic compatibility in residential and other environments due to conducted and radiated disturbances.

This equipment is supplied as open-type equipment. It must be mounted within an enclosure that is suitably designed for those specific environmental conditions that will be present and appropriately designed to prevent personal injury resulting from accessibility to live parts. The enclosure must have suitable flame-retardant properties to prevent or minimize the spread of flame, complying with a flame spread rating of 5VA, V2, V1, V0 (or equivalent) if non-metallic. The interior of the enclosure must be accessible only by the use of a tool. Subsequent sections of this publication may contain additional information regarding specific enclosure type ratings that are required to comply with certain product safety certifications.

In addition to this publication, see:

- Industrial Automation Wiring and Grounding Guidelines, for additional installation requirements, Allen-Bradley publication 1770-4.1.
- NEMA Standards 250 and IEC 60529, as applicable, for explanations of the degrees of protection provided by different types of enclosure.

ATTENTION

This product is grounded through the DIN rail to chassis ground. Use zinc plated yellow-chromate steel DIN rail to assure proper grounding. The use of other DIN rail materials (for example, aluminum or plastic) that can corrode, oxidize, or are poor conductors, can result in improper or intermittent grounding. Secure DIN rail to mounting surface approximately every 200 mm (7.8 in.) and use end-anchors appropriately.

Prevent Electrostatic Discharge

ATTENTION

This equipment is sensitive to electrostatic discharge, which can cause internal damage and affect normal operation. Follow these guidelines when you handle this equipment:

- Touch a grounded object to discharge potential static.
- Wear an approved grounding wriststrap.
- Do not touch connectors or pins on component boards.
- Do not touch circuit components inside the equipment.
- Use a static-safe workstation, if available.
- Store the equipment in appropriate static-safe packaging when not in use.
- Post a sign near these modules:
  Attention! Avoid electrostatic charging.
  ATENÇÃO! PREVENIR CONTRA O ACÚMULO DE CARGA ELETROSTÁTICA
  For your convenience, a sign that can be cut out and posted is included in this publication.

Removal and Insertion Under Power

WARNING

These modules are designed so you can **remove and insert them under power**. However, take special care when removing or inserting modules in an active process. I/O attached to any module being removed or inserted can change states due to its input/output signal changing conditions.
If you insert or remove the terminal base while backplane power is on, an electrical arc can occur. This could cause an explosion in hazardous location installations.
Be sure that power is removed or the area is nonhazardous before proceeding.

European Communities (EC) Directive Compliance

If this product has the CE mark it is approved for installation within the European Union and EEA regions. It has been designed and tested to meet the following directives.

EMC Directive

These products are tested to meet the Council Directive 2014/30/EU by applying the following standards:

- EN 61000-6-4:2007, Electromagnetic Compatibility (EMC) - Part 6-4: Generic Standard for Industrial Environments (Class A)
- EN 61000-6-2:2005, Electromagnetic Compatibility (EMC) - Part 6-2: Generic Standards - Immunity for Industrial Environments
- EN 61326-1:2013 (Industrial), Electrical Equipment For Measurement, Control, and Laboratory Use - Industrial EMC Requirements

European Hazardous Location Approval

The following applies to products marked CE Ex II (1)2 G and CE Ex II (1) D

- Are Equipment Group II, Equipment Category (1)2, and comply with the Essential Health and Safety Requirements relating to the design and construction of such equipment given in Annex II to Directive 2014/34/EU. See the EC Declaration of Conformity at http://www.rockwellautomation.com/products/certification for details.
- The type of protection is “Ex ib[ia] IIC T4” and “[Ex iaD]” according to EN 60079-11.
- Comply to Standards EN 60079-0:2006, EN 60079-11:2007, EN 60079-26:2004, EN 61241-0:2006, and EN 61241-11:2006, reference certificate number DMT 02 ATEX E 020 X.

- Are intended for use in areas in which explosive atmospheres caused by gases, vapors, mists, or air are likely to occur occasionally. Such locations correspond to Zone 1 or 2 classification according to ATEX directive 2014/34/EU.

IEC Hazardous Location Approval

The following applies to products with the IECEx certification:

- Are intended for use in areas in which explosive atmospheres caused by gases, vapors, mists, or air are likely to occur only infrequently and for short periods. Such locations correspond to Zone 1 or 2 classification to IEC 60079-0.
- The type of protection is "Ex ib[ia] IIC T4" and "[Ex iaD]" according to IEC 60079-11.
- Comply to Standards IEC 60079-0:2004, IEC 60079-11:2006, IEC 60079-26:2004, IEC 61241-0:2004, and IEC 61241-11:2005, reference IECEx certificate number IECEx BVS 09.0030X.

Special Conditions for Safe Use:

The intrinsically safe circuits (ch0 to ch7) may extend into areas with combustible dust. However it shall be ensured that the apparatus, connected to these intrinsically safe circuits, meet the requirements for category 1D respectively 2D and are marked accordingly.

All the other intrinsically safe circuits may also extend into areas with combustible dust. However it shall be ensured that the apparatus, connected to these intrinsically safe circuits, meet the requirements for category 2D and are marked accordingly.

The module may only be used with the terminal base type 1797-TB3/* or type 1797-TB3S/* (DMT 98 ATEX E012U)

A warning label shall be installed in immediate proximity of these apparatus: **ATTENTION! Avoid electrostatic charging**.

Installation in Zone 1

These modules must not be exposed to the environment. Provide a suitable metal enclosure. This module has a protection factor of IP20.

WARNING

These modules cannot be used in an intrinsically safe environment after they have been exposed to non-intrinsically safe signals.

Installation in Zone 22

When the module is installed in Zone 22, the following cabinets must be used: IVK2-ISRPI-V16LC; IVK2-ISRPI-V8HYW; or IVK2-ISRPI-V8LC. These cabinets can be purchased from:

Pepperl+Fuchs GmbH
Konigsberger Allee 85-87, D-68307
Mannheim, Germany
Attn: PA Sales Dept.
Kirsten Becker
Telephone +49 776 1298
www.pepperl-fuchs.com

The IS-RPI cabinets (type IVK2-ISRPI-V8LC, IVK2-ISRPI-V8HYW, or IVK2-ISPRI-V16LC) ensures the basic protection for the intrinsically safe apparatus of the FLEX Ex system for use in Zone 22. It corresponds with category 3D according to RL 94/9 EG and with the type label marked with the following information:

Pepperl+Fuchs GmbH
68307 Mannheim
IVK2-ISRPI-V8LC (or IVK2-ISRPI-V8HYW or
IVK2-ISRPI-V16LC)
Ex II 3 D Ex tD A22 IP54 T70 °C X
CE
Serial (manufacturing) number
Model year

Install the Module

Read this for information about how to install the module which must be used with a 1797-TB3 or 1797-TB3S intrinsically safe terminal base unit.

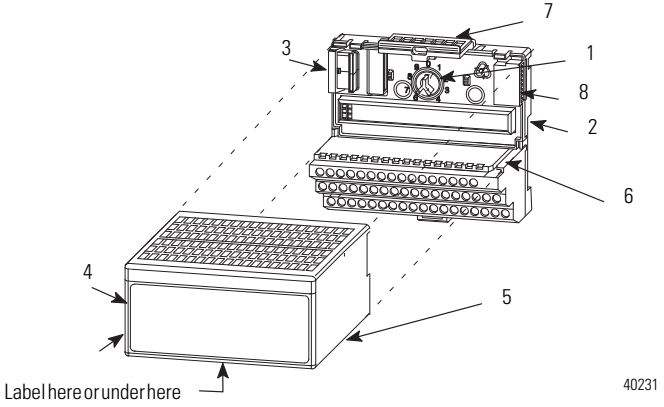

ATTENTION

This equipmment is considered Group 1, Class A industrial equipement according to IEC/CISPR Publication 11. Without appropriate precautions, there may be potential difficulties ensuring electromagnetic compatibility in other environments due to conducted as well as radiated disturbance.
This equipment is supplied as open-type equipment. It must be mounted within an enclosure that is suitably designed for those specific environmental conditions that will be present and appropriately designed to prevent personal injury resulting from accessiblity to live parts. The interior of the enclosure must be accessible only by the use of a tool. Subsequent sections of this publication may contain additional infromation regarding specific enclosure type ratings that are required to comply with certain productsafety certifications.

ATTENTION

During mounting of all devices, be sure that all debris (such as metal chips or wire strands) is kept from falling into the module. Debris that falls into the module could cause damage on power up.

ATTENTION

Do not remove or replace a Terminal Base unit while power is applied. Interruption of the backplane can result in unintentional operation or machine motion.

To install the module on a 1797 terminal base, see the figure and complete the following.

1. Rotate keyswitch (1) on terminal base unit (2) clockwise to position 3 (1797-IE8 and 1797-IE8NF) or position 8 (1797-IE8H) as required for the particular type of module.

IMPORTANT

Do not change the position of the keyswitch after wiring the terminal base unit.

2. Make certain the flexbus connector (3) is pushed all the way to the left to connect with the neighboring terminal base/adapter.

IMPORTANT

You cannot install the module unless the connector is fully extended.

3. Make sure the pins on the bottom of the module are straight so they align properly with the connector in the terminal base unit.
4. Position the module (4) with its alignment bar (5) aligned with the groove (6) on the terminal base.
5. Press firmly and evenly to seat the module in the terminal base unit, noting that the module is seated when the latching mechanism (7) is locked into the module.
6. Remove cap plug (8) and attach another intrinsically safe terminal base unit to the right of this terminal base unit if required.

IMPORTANT

Make certain that you only connect terminal base units to other intrinsically safe system modules or adapters to maintain the integrity of the intrinsically safe backplane.

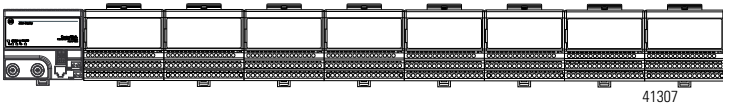

41307

Wire the Module to a 1797-TB3 or 1797-TB3S Terminal Base Unit

WARNING

If you connect or disconnect wiring while the field-side power is on, an electrical arc can occur. This could cause an explosion in hazardous location installations. Be sure that power is removed or the area is nonhazardous before proceeding.

Module Wiring

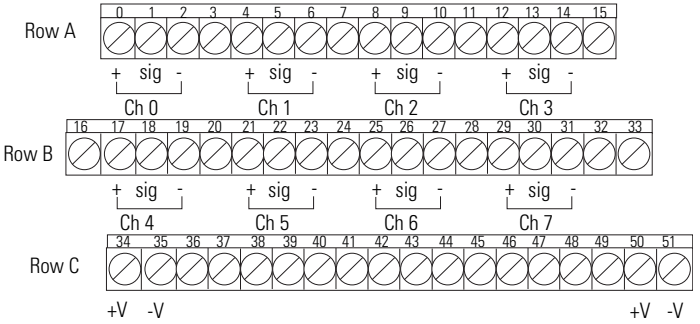

No connections allowed to terminals 16, 33, 36, 40, 41, 42, 43, 44, 45, and 49.

40071

1. Connect the individual input wiring to (+) terminals (0, 4, 8, 12) on the 0…15 row (A) and on the 16…33 row (B) (terminals 17, 21, 25, 29) as indicated in the table, Wire Connections on page 12.

2. Connect the associated input to the corresponding (sig) terminal (1, 5, 9, 13) on the 0…15 row (A), and on the 16…33 row (B) (terminals 18, 22, 26, 30) for each input as indicated in the table, Wire Connections on page 12.

3. For other configurations, see the wiring diagrams in the section, Inputs on page 13.

4. Connect +V DC power to terminal 34 on the 34…51 row (C).

5. Connect -V to terminal 35 on the 34…51 row (C).

WARNING

Make certain that you power these modules with an intrinsically safe power supply. Do not exceed the values listed in the specifications for these modules. If you connect or disconnect wiring while the field-side power is on, an electrical arc can occur. This could cause an explosion in hazardous location installations. Be sure that power is removed or the area is nonhazardous before proceeding.

6. If continuing power to the next terminal base unit, connect a jumper from terminal 50 (+V) on this base unit to terminal 34 on the next base unit.

7. If continuing common to the next terminal base unit, connect a jumper from terminal 51 (-V) on this base unit to terminal 35 on the next base unit.

ATTENTION

To reduce susceptibility to noise, power analog modules and digital modules from separate power supplies.

Wire Connections

Input	Input Source	Input Signal	Input Return	Input	Input Source	Input Signal	Input Return
Input 0	A-0	A-1	A-2	Input 4	B-17	B-18	B-19
Input 1	A-4	A-5	A-6	Input 5	B-21	B-22	B-23
Input 2	A-8	A-9	A-10	Input 6	B-25	B-26	B-27
Input 3	A-12	A-13	A-14	Input 7	B-29	B-30	B-31
+V	Terminals 34 and 50						
-V	Terminals 35 and 51						

ATTENTION

Do not use the unused terminals on this terminal base unit. Using these terminals as supporting terminals can result in damage to the module, or unintended operation of your system, or both.

Ground the Module

All I/O wiring must use shielded wire. Shields must be terminated external to the module, such as bus bars and shield-terminating feed throughs.

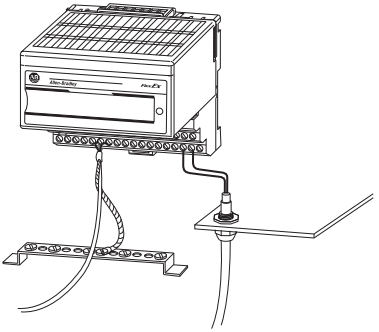

44862

Inputs

Each input can be operated from an analog field device signal. **Do not apply any nonintrinsically safe signals to these modules.**

When using an intrinsically safe electrical apparatus according to EN50020, the European Community directives and regulations must be followed.

The channels in these modules are electrically connected to each other and have a common plus-line.

IMPORTANT

When interconnecting several lines, you must consider the total accumulated power and check for intrinsic safety.

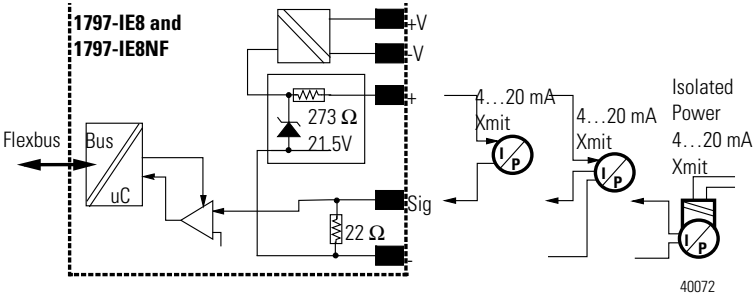
1797-IE8 and
1797-IE8NF
+V
-V
+
273 Ω
21.5V
Flexbus
Bus
uC
Sig
22 Ω
-
4…20 mA
Xmit
4…20 mA
Xmit
Isolated
Power
4…20 mA
Xmit
40072

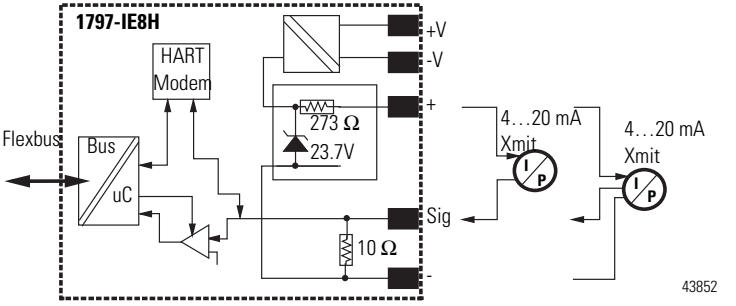
1797-IE8H
HART
Modem
+V
-V
+
273 Ω
23.7V
Flexbus
Bus
uC
Sig
10 Ω
-
4…20 mA
Xmit
4…20 mA
Xmit
43852

1797-IE8 and 1797-IE8NF Field Transmitter Supply Characteristic

The field transmitter supply can be modeled as a 21.5V source with a 273 Ω series resistance. (See the following graph.) This provides a simple and useful mechanism to determine transmitter and loop compatibility.

The actual transmitter supply contains three ranges of impedance with the following characteristics:

- The output voltage is ≈21.5V for load currents of 0 mA.
- If the load is more than ≈680 Ω but less than ∞Ω, the transmitter supply is in a constant resistance region (≈273 Ω).
- For load impedance between 0 and ≈680 Ω, the transmitter supply current is in constant current mode (≈22 mA).

If an intrinsic safety fault occurs in the field transmitter supply of any channel, every channel's field transmitter power is shutdown.

The following graph depicts the typical transmitter load characteristic.

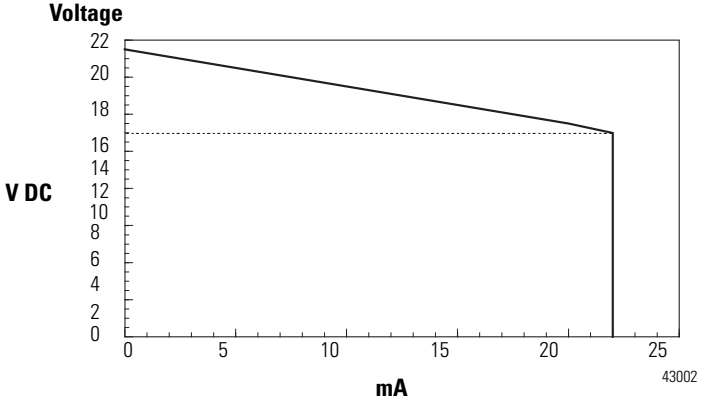

The normal module field side power consumption is 7.5 W when all channel 21.5V sources (+) are loaded. If field devices are used that are powered separately, the module field-side power consumption can be determined by Field_Side_Power = 9.5V x (300 mA + n x 55 mA). Where n is the number of field devices that are supplied by the 1797-IE8 or 1797-IE8NF.

1797-IE8H Field Transmitter Supply Characteristic

The field transmitter supply can be modeled as a 23.7V source with a 273 Ω series resistance. (See the following graph.) This provides a simple and useful mechanism to determine transmitter and loop compatibility.

The actual transmitter supply contains three ranges of impedance with the following characteristics:

- The output voltage is ≈23.7V for load currents of 0 mA.
- If the load is more than ≈750 Ω but less than ∞Ω, the transmitter supply is in a constant resistance region (≈273 Ω).
- For load impedance between 0 and ≈750 Ω, the transmitter supply current is controlled by the field device to a maximum of ≈22 mA.

If an intrinsic safety fault occurs in the field transmitter supply of any channel, every channel's field transmitter power is shutdown.

The following graph depicts the typical transmitter load characteristic.

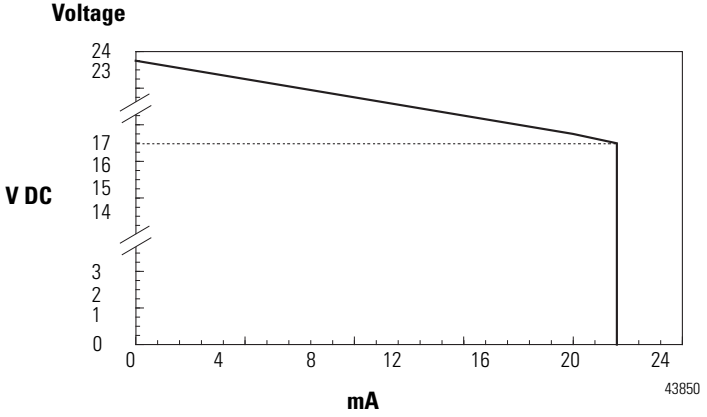

The normal module field side power consumption is 7.1 W when all channel 23.7V sources (+) are loaded. If field devices are used that are powered separately, the module field-side power consumption can be determined by Field_Side_Power = 9.5V x (180 mA + n x 69 mA). Where n is the number of field devices that are supplied by the 1797-IE8H.

1797-IE8 and 1797-IE8NF Input Map (Read Words)

	Bit															
Word	**15**	**14**	**13**	**12**	**11**	**10**	**9**	**8**	**7**	**6**	**5**	**4**	**3**	**2**	**1**	**0**
0	Channel 0 Input Data															
1	Channel 1 Input Data															
2	Channel 2 Input Data															
3	Channel 3 Input Data															
4	Channel 4 Input Data															
5	Channel 5 Input Data															
6	Channel 6 Input Data															
7	Channel 7 Input Data															
8	OA Ch7	OA Ch6	OA Ch5	OA Ch4	OA Ch3	OA Ch2	OA Ch1	OA Ch0	UA Ch7	UA Ch6	UA Ch5	UA Ch4	UA Ch3	UA Ch2	UA Ch1	UA Ch0
9	RF Ch7	RF Ch6	RF Ch5	RF Ch4	RF Ch3	RF Ch2	RF Ch1	RF Ch0	LF Ch7	LF Ch6	LF Ch5	LF Ch4	LF Ch3	LF Ch2	LF Ch1	LF Ch0
10													Diagnostic Status			
11	Res Flg	Module command response							Module response data							

Where: Ch = channel
OA = Over Alarm
UA = Under Alarm
RF = Remote Fault
LF = Local Fault
Res Flg = Response Flag

1797-IE8H Input Map (Read Words)

	Bit															
Word	**15**	**14**	**13**	**12**	**11**	**10**	**9**	**8**	**7**	**6**	**5**	**4**	**3**	**2**	**1**	**0**
0	Channel 0 Input Data															
1	Channel 1 Input Data															
2	Channel 2 Input Data															
3	Channel 3 Input Data															
4	Channel 4 Input Data															
5	Channel 5 Input Data															
6	Channel 6 Input Data															
7	Channel 7 Input Data															
8	OA Ch7	OA Ch6	OA Ch5	OA Ch4	OA Ch3	OA Ch2	OA Ch1	OA Ch0	UA Ch7	UA Ch6	UA Ch5	UA Ch4	UA Ch3	UA Ch2	UA Ch1	UA Ch0
9	RF Ch7	RF Ch6	RF Ch5	RF Ch4	RF Ch3	RF Ch2	RF Ch1	RF Ch0	LF Ch7	LF Ch6	LF Ch5	LF Ch4	LF Ch3	LF Ch2	LF Ch1	LF Ch0
10	Reserved								H Rbd	Reserved			Diagnostic Status			
11	H Rb Ch7	H Rb Ch6	H Rb Ch5	H Rb Ch4	H Rb Ch3	H Rb Ch2	H Rb Ch1	H Rb Ch0	H Fail Ch7	H Fail Ch6	H Fail Ch5	H Fail Ch4	H Fail Ch3	H Fail Ch2	H Fail Ch1	H Fail Ch0
12	H Tmt Ch7	H Tmt Ch6	H Tmt Ch5	H Tmt Ch4	H Tmt Ch3	H Tmt Ch2	H Tmt Ch1	H Tmt Ch0	H Cm Ch7	H Cm Ch6	H Cm Ch5	H Cm Ch4	H Cm Ch3	H Cm Ch2	H Cm Ch1	H Cm Ch0

Where:
- Ch = channel
- OA = Over Alarm
- UA = Under Alarm
- RF = Remote Fault
- LF = Local Fault
- H Rbd = HART Rebuild
- H Rb = HART Readback
- H Fail = HART Failure
- H Tmt = HART Transmitter
- H Cm = HART Communication

1797-IE8H Input Map (Read Words)

Word	Bit 15	14	13	12	11	10	9	8	7	6	5	4	3	2	1	0
0	Input Data Channel 0															
1	Input Data Channel 1															
2	Input Data Channel 2															
3	Input Data Channel 3															
4	Input Data Channel 4															
5	Input Data Channel 5															
6	Input Data Channel 6															
7	Input Data Channel 7															
8	HA Ch 7	HA Ch 6	HA Ch 5	HA Ch 4	HA Ch 3	HA Ch 2	HA Ch 1	HA Ch 0	LA Ch 7	LA Ch 6	LA Ch 5	LA Ch 4	LA Ch 3	LA Ch 2	LA Ch 1	LA Ch 0
9	SA Rem. Ch 7	SA Rem. Ch 6	SA Rem. Ch 5	SA Rem. Ch 4	SA Rem. Ch 3	SA Rem. Ch 2	SA Rem. Ch 1	SA Rem. Ch 0	OR Ch7	OR Ch6	OR Ch5	OR Ch4	OR Ch3	OR Ch2	OR Ch1	OR Ch0
10	Reserved								HR	Reserved			Diagnostic Status			
11	HCF Ch 7	HCF Ch 6	HCF Ch 5	HCF Ch 4	HCF Ch 3	HCF Ch 2	HCF Ch 1	HCF Ch 0	HF Ch 7	HF Ch 6	HF Ch 5	HF Ch 4	HF Ch 3	HF Ch 2	HF Ch 1	HF Ch 0
12	HP Ch 7	HP Ch 6	HP Ch 5	HP Ch 4	HP Ch 3	HP Ch 2	HP Ch 1	HP Ch 0	HC Ch 7	HC Ch 6	HC Ch 5	HC Ch 4	HC Ch 3	HC Ch 2	HC Ch 1	HC Ch 0

Where: HA = high alarm
LA = low alarm
SA = second alarm
OR = out of range
Res. = reserved
HR = HART rebuilding
HCF = HART current fault
HF = HART communication fault
HP = HART present
HC = HART communication

1797-IE8 and 1797-IE8NF Output Map (Write Words)

	Bit															
Word	**15**	**14**	**13**	**12**	**11**	**10**	**9**	**8**	**7**	**6**	**5**	**4**	**3**	**2**	**1**	**0**
0	Reserved		High and Low Error Level 0…3					u/d 0…3	Filter Cutoff 0…3			Data Format 0…3				Flt Md 0…3
1	Sq Rt Th		High and Low Error Level 4…7					u/d 4…7	Filter Cutoff 4…7			Data Format 4…7				Flt Md 4…7
2	CF	Module Command							Module Command Data							

Where: u/d = Up/Down
Flt Md = Fault Module
Sq Rt Th = Square Root Threshold
CF = Command Flag

1797-IE8H Output Configuration Map

	Bit															
Word	**15**	**14**	**13**	**12**	**11**	**10**	**9**	**8**	**7**	**6**	**5**	**4**	**3**	**2**	**1**	**0**
0	Reserved		High and Low Error Level 0…3					u/d 0…3	Filter Cutoff 0…3			Data Format 0…3				Flt Md 0…3
1	Sq Rt Th		High and Low Error Level 4…7					u/d 4…7	Filter Cutoff 4…7			Data Format 4…7				Flt Md 4…7

Where: u/d = Up/Down
Flt Md = Fault Module
Sq Rt Th = Square Root Threshold

1797-IE8H Configuration Map

Word	Bit 15	14	13	12	11	10	9	8	7	6	5	4	3	2	1	0
0	NF	VR	FE Ch7	FE Ch6	FE Ch5	FE Ch4	Byte Order Group B[1]		HS LEDs	HSI	FE Ch3	FE Ch2	FE Ch1	FE Ch0	Byte Order Group A[1]	
1	HD Ch7	HD Ch6	HD Ch5	HD Ch4	HD Ch3	HD Ch2	HD Ch1	HD Ch0	HHE Ch7	HHE Ch6	HHE Ch5	HHE Ch4	HHE Ch3	HHE Ch2	HHE Ch1	HHE Ch0
2	Data Format Ch3				Data Format Ch2				Data Format Ch1				Data Format Ch0			
3	Data Format Ch7				Data Format Ch6				Data Format Ch5				Data Format Ch4			
4	HART Read Back Threshold Ch1					Digital Filter Ch1			HART Read Back Threshold Ch0					Digital Filter Ch0		
5	HART Read Back Threshold Ch3					Digital Filter Ch3			HART Read Back Threshold Ch2					Digital Filter Ch2		
6	HART Read Back Threshold Ch5					Digital Filter Ch5			HART Read Back Threshold Ch4					Digital Filter Ch4		
7	HART Read Back Threshold Ch7					Digital Filter Ch7			HART Read Back Threshold Ch6					Digital Filter Ch6		
8	Square root Limit Ch7		Square root Limit Ch6		Square root Limit Ch5		Square root Limit Ch4		Square root Limit Ch3		Square root Limit Ch2		Square root Limit Ch1		Square root Limit Ch0	
9	High Alarm Limit Ch0															
10	Low Alarm Limit Ch0															
11	High High Alarm Limit (Remote) Ch0															
12	Low Low Alarm Limit (Remote) Ch0															
13	High Alarm Limit Ch1															
14	Low Alarm Limit Ch1															
15	High High Alarm Limit (Remote) Ch1															
16	Low Low Alarm Limit (Remote) Ch1															
17	High Alarm Limit Ch2															
18	Low Alarm Limit Ch2															
19	High High Alarm Limit (Remote) Ch2															
20	Low Low Alarm Limit (Remote) Ch2															
21	High Alarm Limit Ch3															

1797-IE8H Configuration Map

Word	Bit 15	14	13	12	11	10	9	8	7	6	5	4	3	2	1	0
22	Low Alarm Limit Ch3															
23	High High Alarm Limit (Remote) Ch3															
24	Low Low Alarm Limit (Remote) Ch3															
25	High Alarm Limit Ch4															
26	Low Alarm Limit Ch4															
27	High High Alarm Limit (Remote) Ch4															
28	Low Low Alarm Limit (Remote) Ch4															
29	High Alarm Limit Ch5															
30	Low Alarm Limit Ch5															
31	High High Alarm Limit (Remote) Ch5															
32	Low Low Alarm Limit (Remote) Ch5															
33	High Alarm Limit Ch6															
34	Low Alarm Limit Ch6															
35	High High Alarm Limit (Remote) Ch6															
36	Low Low Alarm Limit (Remote) Ch6															
37	High Alarm Limit Ch7															
38	Low Alarm Limit Ch7															
39	High High Alarm Limit (Remote) Ch7															
40	Low Low Alarm Limit (Remote) Ch7															
41	HR Ch7	HR Ch6	HR Ch5	HR Ch4	HR Ch3	HR Ch2	HR Ch1	HR Ch0	HCD Ch7	HCD Ch6	HCD Ch5	HCD Ch4	HCD Ch3	HCD Ch2	HCD Ch1	HCD Ch0

Where
NF: notch filter (50/60 Hz)
FE: fault enable
HS LED: HART status LEDs
HD: HART disable
HR: HART rebuild
HCD: HART CMD3 disable
VR: verify replacement
HSI: HART status inhibit
HHE: HART handheld enable

(1) Group B and Group A “Not used in some controller software”

Fault Mode - Write Words 0 and 1

Word 0	Bit 00	Fault enable for Channels 0...3
Word 1	Bit 00	Fault enable for Channels 4...7
Where:	0 = disable 1 = enable with wire-off overload	

"Add-on" Filter Selections - Write Words 0 and 1 or Filter Cutoff Selections

Word	Bits			Description
0	07	06	05	Channels 0...3
1	07	06	05	Channels 4...7
	0	0	0	Hardware filtering only (default filtering)
	0	0	1	40 Hz (25 ms)
	0	1	0	20 Hz (50 ms)
	0	1	1	10 Hz (100 ms)
	1	0	0	4 Hz (250 ms)
	1	0	1	2 Hz (500 ms)
	1	1	0	1 Hz (1 s)
	1	1	1	0.5 Hz (2 s)

Remote Transmitter Error Up/Down - Write Words 0 and 1

Word 0	Bit 08	Up/down for Channels 0...3
Word 1	Bit 08	Up/down for Channels 4...7
Where:	0 = up 1 = down	

Data Format - Write Words 0 and 1

Word	Bits				Description
0	04	03	02	01	Channels 0...3
1	04	03	02	01	Channels 4...7
	0	0	0	0	0…22 mA = 0...22,000 with error steps (default)
	0	0	0	1	0…22 mA = 0…110%, with error steps
	0	0	1	0	0…22 mA = 0…104.8%, square root, with error steps

Data Format - Write Words 0 and 1

Word	Bits				Description
	0	0	1	1	0…22 mA = 0…65,535, unsigned integer, with error steps
	0	1	0	0	2…22 mA, with error steps
	0	1	0	1	2…22 mA = -12.5…112.5%, with error steps
	0	1	1	0	4…22 mA = 0…106%, square root, with error steps
	0	1	1	1	4…20 mA = 0…65,535, unsigned integer, with error steps
	1	0	0	0	Not assigned
	1	0	0	1	Not assigned
	1	0	1	0	Not assigned
	1	0	1	1	0…22 mA = A/D count, with fixed error
	1	1	0	0	3.6…21 mA = NAMUR NE 43, with fixed error
	1	1	0	1	3…21 mA = -6.25…106.25% with fixed error
	1	1	1	0	2…22 mA = -12.5…112.5% with fixed error
	1	1	1	1	Not assigned

Data Format - Write Words 2 and 3

Data Format	Bits				Format	Signal Range		User Range		Resolution
	15	14	13	12						
	11	10	9	8						
	7	6	5	4		LO	HI	LO	HI	
	3	2	1	0						
0	0	0	0	0	0…20 mA as Milliamps	0.00	22.00	0 (0.000 mA)	22000 (22.000 mA)	0.1% of 0...20 mA
1	0	0	0	1	0…20 mA as %	0.00	22.00	0 (0%)	11000 (110.00%)	0.2% of 0...20 mA
2	0	0	1	0	0…20 mA as |%	0.00	22.00	0 (0%)	10488 (140.88%)	0.19% of 0...20 mA
3	0	0	1	1	0…20 mA as unsigned integer	0.00	20.00	0 (0.000 mA)	65535 (20.000 mA)	0.03% of 0...20 mA
4	0	1	0	0	4…20 mA as mA	2.00	22.00	2000 (2.000 mA)	22000 (22.000 mA)	0.01% of 4...20 mA
5	0	1	0	1	4…20 mA as %	2.00	22.00	-1250 (-12.50%)	11250 (112.50%)	0.16% of 4...20 mA

Data Format - Write Words 2 and 3 (Continued)

Data Format	Bits				Format	Signal Range		User Range		Resolution
	15	14	13	12						
	11	10	9	8						
	7	6	5	4		LO	HI	LO	HI	
	3	2	1	0						
6	0	1	1	0	4…20 mA as |%	4.00	22.00	0 (0%)	10607 (106.07%)	0.17% of 4...20 mA
7	0	1	1	1	4…20 mA as unsigned integer	4.00	20.00	0 (4 mA)	65535 (20 mA)	0.03% of 4...20 mA
8	1	0	0	0	Not assigned					
9	1	0	0	1						
10	1	0	1	0						
11	1	0	1	1	0...20 mA as A/D count	0.00	22.00	0 (0 mA)	55000 (22 mA)	0.04% of 0...20 mA
12	1	1	0	0	4...20 mA as %	3.60	21.00	-250 (-2.50%)	10625 (106.25%)	0.16% of 4...20 mA
13	1	1	0	1	4...20 mA as %	3.00	21.00	-625 (-6.25%)	10625 (106.25%)	0.16% of 4...20 mA
14	1	1	1	0	4...20 mA as %	2.00	22.00	-1250 (-12.50%)	11250 (112.50%)	0.16% of 4...20 mA
15	1	1	1	1	Not assigned					

Error Level 0.1 mA Steps

Word	Bits					Description
Word 0	13	12	11	10	09	Error level channels 0...3
Word 1	13	12	11	10	09	Error level channels 4...7
	0	0	0	0	0	Disabled
						0.1 mA * binary valve = remote fault alarm
						Examples
Data Format 2...22 mA -12.5...112.5%	0	0	1	1	1	Binary value = 7, 0.1 mA * 7 = 0.7 mA Remote fault alarm at -4.38% or +104.38%
	0	1	1	1	1	Binary value = 15, 0.1 mA * 15 = 1.5 mA Remote fault alarm at -9.38% or + 109.38%

1797-IE8H Analog Input Extended Configuration Data Table

Config Word	Bits 15	14	13	12	11	10	9	8	7	6	5	4	3	2	1	0
0	PMI Ch 7	PMI Ch 6	PMI Ch 5	PMI Ch 4	PMI Ch 3	PMI Ch 2	PMI Ch 1	PMI Ch 0	SME Ch 7	SME Ch 6	SME Ch 5	SME Ch 4	SME Ch 3	SME Ch 2	SME Ch 1	SME Ch 0
1	Reserved			HART Read Back Threshold Ch 4...7					HS LED	HS Inht	50/ 60 Hz	HART Read Back Threshold Ch 0...3				

Where Ch = channel
PMI = primary master inhibit
SME = secondary master enable
HS LED = HART status LEDs
HS Inht = HART status inhibit

1797-IE8H Secondary Master Enable (SME)/ Primary Master Inhibit (PMI)

	Bits[1]	1 (Default)	2	3	4
PMI	8, 9, 10, 11, 12, 13, 14, 15	0	0	1	1
SME	0, 1, 2, 3, 4, 5, 6, 7	0	1	0	1
HART Smooth Filter		Pulsed	On	Off	On
Rebuild		On	On	Off	Off
HART Read Back		On	On	Off	Off
Primary Master		On	On	Off	Off
Secondary Master		Off	On	Off	On

(1) Where:
Ch 0 - bits 0 and 8; Ch 1 - bits 1 and 9; Ch 2 - bits 2 and 10; Ch 3 - bits 3 and 11
Ch 4 - bits 4 and 12; Ch 5 - bits 5 and 13; Ch 6 - bits 6 and 14; Ch 7 - bits 7 and 15

These two bits control a few module internal functions individually for channels 0 through 7.

Byte Order Configuration

Byte Order Group B		Byte Order Group A		Description[1]
Bit 9	Bit 8	Bit 1	Bit 0	
0	0	0	0	Little Endian Format (Default) = All data entries in true Little Endian format.
1	0	1	0	Word Swap = Word swap only values requiring more then one word, for example: 32 bit float values.
0	1	0	1	Byte Swap (reserved for future implementation) = Byte swap all words in data table.
1	1	1	1	Big Endian Format (reserved for future implementation) = All data entries in true Big Endian format.

(1) All other combinations are invalid. Values will Revert to the last valid configuration (in case of original start-up this would be default configuration) and set module Diagnostic Status to "2" configuration failure.

Digital Filter

Digital Filter frequency	Decimal Value	Bits			Digital Filter frequency	Decimal Value	Bits		
		2	1	0			2	1	0
		10	9	8			10	9	8
0.5 Hz	7	0	0	0	10 Hz	3	1	0	0
1 Hz	6	0	0	1	Not applicable[1]	2	1	0	1
2 Hz	5	0	1	0	Not applicable	1	1	1	0
4 Hz	4	0	1	1	Not applicable	0	1	1	1

(1) Decimal Values 2, 1 and 0 are not applicable. Values will Revert to the last valid configuration (in case of original start-up this would be default configuration) and set module Diagnostic Status to "2" configuration failure.

Field Descriptions

Analog Input Data	Specifies the value of the analog input data from the module. Specific format is controlled by Module Data Format Control parameter. This data is used when the channel is in analog input mode.
Overrange Alarm	Alarm signal for input overrange. This signal is always active. Range: 0 = normal, 1 = input overrange
Underrange Alarm	Alarm signal for input underrange. This signal is always active. Range: 0 = normal, 1 = input underrange
Remote Fault Alarm	Alarm from remote transmitter, indicating transmitter difficulties, sensor difficulties, or loop to the sensor is open. If not using a remote transmitter, this alarm can be used as a high-high or low-low alarm. Depending on Data Format, these current values may be indicated by percent, mA, or integer values. Range: 0 = normal, 1 = fault detected
Local Fault Alarm	Alarm indicating the loop to the transmitter, or, if there is no transmitter, the loop is open or shorted. When active, this alarm triggers at 2 mA and 22 mA for open and short respectively. Depending on Data Format, these current values may be indicated by percent, mA, or integer values. Range: 0 = normal, 1 = fault detected
HART Rebuild Bit (1797-IE8H)	The HART Rebuild bit will trigger a HART Rebuild on a transition from 0 to 1. The HART Rebuild bit must remain 1 for HART communications to function after the rebuild completes. If the HART Rebuild bit is set to 0, HART communications are disabled.
HART Rebuild Flag (1797-IE8H)	During the time the system is rebuilding the HART table, the HART rebuild flag is set. Range: 0 = normal, 1 = HART rebuilding
HART Failure (1797-IE8H)	A 1 indicates that HART communications are failing on the associated channel. Range: 0 = normal, 1 = HART communication failure
HART Communication Fault (1797-IE8H??)	When this bit is set (1), it indicates that HART communications are failing on the associated channel. Range: 0 = normal, 1 = HART communication fault

Field Descriptions

HART Read Back (1797-IE8H)	The HART Read Back bits show deviations between the analog measured current value on a loop (by the 1797-IE8H) and the digital real current (sensed by the HART device on its own) received by the 1797-IE8H during HART communication in the background. This functionality can be turned on by defining a HART Readback Threshold greater than 0. See 1797-IE8H CE, CENELEC I/O Entity Parameters on page 43. This functionality is used to recognize loop errors whereby a parasitic current is bypassing the 1797-IE8H. Range: 0 = normal, 1 = HART Readback threshold is exceeded.
HART Read Back Threshold (1797-IE8H)	Delivers the percentage value (in steps of 1%) of the threshold for forcing the HART read back indication (input signal deviation HART/Analog) with a 31% maximum deviation. If there is no HART transmitter on the loop or the loop is not in the transmitter list, the function is switched off internally in the I/O module. Range: 0 = disabled, 1…4 = not supported from I/O module (set to 5 internally), 5…31 = percentage threshold data (5…31%).
HART Communication (1797-IE8H)	Range: 0 = normal, 1 = HART communication is currently occurring.
HART Transmitter List (1797-IE8H)	When this bit is set (1), it indicates that a HART field device was found during the rebuild sequence on the associated channel. Range: 0 = transmitter was not found, 1 = HART transmitter was found.
Square Root Threshold (1797-IE8H)	This setting affects all channels using Data Format 2 or 6. It sets low, end-of-scale percent value at which square roots start being reported. Below this level 0% is reported. This compensates for asymptotic values of the square-root function as the input approaches 0. Range: 0 = disabled, 1 = 2%, 2 = 5%, 3 = 10%
Extended Configuration (1797-IE8H)	Configuration additions are needed for HART communications in Series A mode. An extended configuration area is provided. This Extended Configuration table is configured by writing a CIO or MSG instruction with the following: Class = 0x7D Instance = Product location on flexbus (Use 1 for the module located next to the adapter.) Attribute = 0x65 Service = Set Attribute Single (0x10) See 1797-IE8H CE, CENELEC I/O Entity Parameters on page 43.

Field Descriptions

HART Status Indicators	When this bit is set (1), the status indicators are used for HART diagnostic. Indicator behavior changes to show communication on HART. Each indicator represents a HART loop. Flashing yellow indicates that communication is currently being processed. Solid yellow means that this device is in the transmitter list.
HART Status Inhibit	When this bit is set (1), the HART communication status is not shown in the realtime data table. The appropriate areas are cleared with zeroes. Range: 0 = normal, 1 = inhibit HART
50/60 Hz Filter	Range: 0 = 50 Hz, 1 = 60 Hz

Cyclic HART Input Data

The HART input data holds the primary variables for the "live" HART device, and other information gathered during the normal HART scan. Additional "documentary" data is available through the pass through message interface in the device information tables. Pass through messages are defined in detail in the User Manual.

IMPORTANT The HART Input Data for a channel may be zeroes if HART communications is disabled for that channel. For more information on disabling HART communications, refer to the Disable HART communications and HART Disable functions in the Configuration Map table.

HART Input Data

Word	Bit 15	14	13	12	11	10	9	8	7	6	5	4	3	2	1	0
0	Reserved								Ch7 (HART Communications Status)	Ch6	Ch5	Ch4	Ch3	Ch2	Ch1	Ch0
1	Reserved															
2	Ch0 HART Field Device Status								Ch0 HART Comm Status							
3	Reserved								Ch0 HART Loop Status							
4	Ch0 HART Primary Value (IEEE 754-1985 Single-Precision 32 bit floating point)															
5																
6	Ch0 HART Secondary Value (IEEE 754-1985 Single-Precision 32 bit floating point)															
7																
8	Ch0 HART Tertiary Value (IEEE 754-1985 Single-Precision 32 bit floating point)															
9																
10	Ch0 HART Fourth (Quaternary) Value (IEEE 754-1985 Single-Precision 32 bit floating point)															
11																
12	Ch0 Secondary Value Units Code								Ch0 Primary Value Units Code							
13	Ch0 Fourth Value Units Code								Ch0 Tertiary Value Units Code							
14	Ch1 HART Field Device Status								Ch1 HART Communication Status							
15	Reserved								Ch1 HART Loop Status							
16	Ch1 HART Primary Value															
17																

HART Input Data

Word	Bit 15	14	13	12	11	10	9	8	7	6	5	4	3	2	1	0
18	Ch1 HART Secondary Value															
19																
20	Ch1 HART Teritiary Value															
21																
22	Ch1 HART Fourth Value															
23																
24	Ch1 HART Secondary Value Units Code								Ch1 HART Primary Value Units Code							
25	Ch1 HART Fourth Value								Ch1 HART Tertiary Value Units Code							
26	Ch2 HART Field Device Status								Ch2 HART Communication Status							
27	Reserved								Ch2 HART Loop Status							
28	Ch2 HART Primary Value															
29																
30	Ch2 HART Secondary Value															
31																
32	Ch 2 HART Tertiary Value															
33																
34	Ch2 HART Fourth Value															
35																
36	Ch2 HART Secondary Value Units Code								Ch2 HART Primary Value Units Code							
37	Ch2 HART Fourth Value								Ch2 HART Tertiary Value Units Code							
38	Ch3 HART Field Device Status								Ch3 HART Communication Status							
39	Reserved								Ch0 HART Loop Status							
40	Ch3 HART Primary Value															
41																
42	Ch3 HART Secondary Value															
43																
44	Ch3 HART Tertiary Value															
45																
46	Ch3 HART Fourth Value															
47																

HART Input Data

Word	Bit 15	14	13	12	11	10	9	8	7	6	5	4	3	2	1	0
48	Ch3 HART Secondary Value Units Code								Ch3 HART Primary Value Units Code							
49	Ch3 HART Fourth Value								Ch3 HART Tertiary Value Units Code							
50	Ch4 HART Field Device Status								Ch4 HART Communication Status							
51	Reserved								Ch4 HART Loop Status							
52	Ch4 HART Primary Value															
53																
54	Ch4 HART Secondary Value															
55																
56	Ch4 HART Tertiary Value															
57																
58	Ch4 HART Fourth Value															
59																
60	Ch4 HART Secondary Value Units Code								Ch4 HART Primary Value Units Code							
61	Ch4 HART Fourth Value								Ch4 HART Tertiary Value Units Code							
62	Ch5 HART Field Device Status								Ch5 HART Communication Status							
63	Reserved								Ch5 HART Loop Status							
64	Ch5 HART Primary Value															
65																
66	Ch5 Secondary Value															
67																
68	Ch5 Tertiary Value															
69																
70	Ch5 Fourth Value															
71																
72	Ch5 HART Secondary Value Units Code								Ch5 HART Primary Value Units Code							
73	Ch5 HART Fourth Value								Ch5 HART Tertiary Value Units Code							
74	Ch6 HART Field Device Status								CH6 HART Communication Status							
75	Reserved								Ch6 HART Loop Status							
76	Ch6 HART Primary Value															
77																

HART Input Data

Word	Bit															
	15	14	13	12	11	10	9	8	7	6	5	4	3	2	1	0
78	Ch6 Secondary Value															
79																
80	Ch6 Tertiary Value															
81																
82	Ch6 Fourth Value															
83																
84	Ch6 HART Secondary Value Units Code								Ch6 HART Primary Value Units Code							
85	Ch6 HART Fourth Value								Ch6 HART Tertiary Value Units Code							
86	Ch7 HART Field Device Status								CH7 HART Communication Status							
87	Reserved								Ch7 HART Loop Status							
88	Ch7 HART Primary Value															
89																
90	Ch7 Secondary Value															
91																
92	Ch7 Tertiary Value															
93																
94	Ch7 Fourth Value															
95																
96	Ch7 HART Secondary Value Units Code								Ch7 HART Primary Value Units Code							
97	Ch7 HART Fourth Value								Ch7 HART Tertiary Value Units Code							

HART Input Data Descriptions

CHn: HART Communication Status	0: HART CMD3 Communication Disabled or No Error	1: HART CMD3 Communication Error between Adapter & Module
CHn: HART Comm Status (HART CMD3 Response first status byte):	Refer to User Manual	
CHn: HART Field Device Status (HART CMD3 Response second status byte):	Refer to User Manual	
Chn: HART Loop Status:		
Bit 0: HART enable	0: Disabled	1: Enabled
Bit 1: Device Connected	0: Not Connected	1: Connected
Bit 2: Response Error	0: No HART message failure	1: Response ended in error
Bit 3: CMD 48 Update	0: CMD 48 not updated	1: CMD 48 updated
Bit 4: HART Loop Tolerance Error	0: No HART Current Fault	1:HART Current Fault
Bit 5: HART Update	0: HART Device information not updated	1: HART Device information updated since last read
Bit 6: HART message	0: No new message	1: HART user message queue has completed a message
Bit 7:		Reserved
Where	PVA = The primary variable for this channel has been acquired. SVA = The secondary variable for this channel has been acquired. TVA = The tertiary variable for this channel has been acquired. FVA = The fourth (quaternary) variable for this channel has been acquired.	

HART Read Back Threshold

HART Read Back	Decimal Value	Bits				
		7	6	5	4	3
		15	14	13	12	11
Disabled	0	0	0	0	0	0
Not applicable[1]	1	0	0	0	0	1
Not applicable	2	0	0	0	1	0
Not applicable	3	0	0	0	1	1
Not applicable	4	0	0	1	0	0
5%	5	0	0	1	0	1
6%	6	0	0	1	1	0
7%	7	0	0	1	1	1
8%	8	0	1	0	0	0
9%	9	0	1	0	0	1
10%	10	0	1	0	1	0
…	…	…	…	…	…	…
30%	30	1	1	1	1	0
31%	31	1	1	1	1	1

(1) 1, 2, 3, and 4 are not applicable. Values between 1 and 4 will lead the IOM to automatically use an internal value of 5%.

Square Root Threshold

Square Root Limit	Decimal Value	Bits		Channel
		1	0	Ch0
		3	2	Ch1
		5	4	Ch2
		7	6	Ch3
		9	8	Ch4
		11	10	Ch5
		13	12	Ch6
		15	14	Ch7
Disabled	0	0	0	
2%	1	0	1	
5%	2	1	0	
10%	3	1	1	

Repair

ATTENTION

This module is not field repairable. Any attempt to open the module will void the warranty and IS certification. If repair is necessary, return the module to the factory.

Status Indicators

1797-IE8 shown

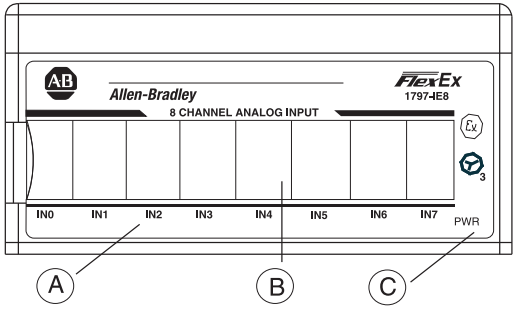

42054

Interpret the Status Indicators

Status	Description
Flashing red	Channel fault - Channel 0 indicator will turn red while power-up check is running
Solid green	Power applied to module
Flashing green	No Flexbus communication - Adapter not powered or faulty connnection
Solid yellow	HART communication functioning normally

Specifications

Specifications - 1797-IE8 and -IE8NF	
Number of Inputs	8 single-ended, non-isolated
IS input type	Ex ia IIB/IIC T4 AEx ia IIC T4 Class I, II, III Division 1 Group A-G T4
IS module type	Ex ib IIB/IIC T4 AEx ib IIC T4 Class I, II, III Division 1 Groups A-D T4
Resolution	16 bits
Transfer Characteristics Accuracy at 20 °C (68 °F) Temperature Drift	 0.1% of output signal range 0.05%/C of output signal range
Functional Data Range	>15V @ 22 mA >21.5V @ 0 mA
Data Format	Configurable
Step Response to 99% of FS	4 ms (1797-IE8) 80 ms (1797-IE8NF)
Module from Adapter Best/Worst Update Time	200 ms/1600 µs
Indicators	8 red fault indicators 1 green power indicator
Inputs (Intrinsically Safe) (Terminals: 0…2; 4…6; 8…10; 12…14; 17…19; 21…23; 25…27; 29…31)	$U_0 \leq 23.7V$ $I_0 \leq 93.5$ mA $P_0 \leq 555$ mW

Specification 1797-IE8 and -IE8NF (Continued)	
Isolation Path Input to Power Supply Input to Flexbus Input to Input Power Supply to Flexbus	Isolation Type Galvanic to DIN EN60079-11 Galvanic to DIN EN60079-11 None Galvanic to DIN EN60079-11
Power Supply (+V, -V Intrinsically Safe) (Terminals: 34 and 50 (+): 35 and 51 (-))	$U_i \leq 9.5$V dc $I_i \leq 1$ A L_i = Negligible C_i = Negligible
Module Field-side Power Consumption	7.5 W
Power Dissipation	5.2 W
Thermal Dissipation	17.75 BTU/hr
Module Location	Cat. No. 1797-TB3 or 1797-TB3S
Conductor Wire Size	$4mm^2$ (12 AWG) stranded max 1.2 mm (3/64 in.) insulation max
Dimensions Metric Imperial	46 mm x 94 mm x 75 mm (1.8 in. x 3.7 in. x 2.95 in.)
Weight	200 g (approximately)
Keyswitch Position	3
Environmental Conditions Operational Temperature Storage Temperature Relative Humidity Shock Operating Nonoperating Vibration	 -20…+70 °C (-4…+158 °F) -40…+85 °C (-40…+185 °F) 5…95% noncondensing Tested to 15 g peak acceleration, 11(+1) ms pulse width Tested to 15 g peak acceleration, 11(+1) ms pulse width Tested 2 g @ 10…500 Hz per IEC68-2-6

Specification 1797-IE8 and -IE8NF (Continued)	
Agency Certification	
CENELEC	II (1) 2G Ex ib[ia] IIC T4 II (1) D [Ex iaD]
U, C-UL	Class I, Groups A, B, C and D; Class II, Groups E, F and G; Class III hazardous Locations. Class I, Zone 1, AEx ib[ia] IIC T4.
FM	Intrinsically safe Class I, Div 1, Groups A, B, C, D, T4. Associated Apparatus with intrinsically safe Connections Class I, II, III, Div 1, Groups A--G Intrinsically safe Class I, Zone 1, AEx ib[ia] IIC T4.
INMETRO	BR-Ex ia/ib IIB/IIC T4
IECEx	[Zone 0] Ex ib[ia] IIC T4 [Ex iaD]
Certificates	
CENELEC	DMT 98 ATEX E 020 X
UL, C-UL	File No.: E197983 Class I Division 1 Hazardous
FM	FM Certificate Number 3009806
INMETRO	05/UL-BRAE-0013X (1797-IE8 only)
IECEX	IECEx BVS 09.0030X

Specifications - 1797-IE8H	
Number of Inputs	8 single-ended, non-isolated
IS Input type	Ex ia IIB/IIC T4 AEx ia IIC T4 Class I, Division I Groups A-G T4 (FM only)
IS Module type	Ex ib IIB/IIC T4 AEx ib IIC T4 Class I, Division I Groups A-D T4 (FM only)
Resolution	16 bits
Transfer Characteristics Accuracy at 20 °C (68 °F) Temperature Drift	 0.1% of output signal range 0.05%/C of output signal range

Functional Data Range	>17V @ 22 mA >23V @ 0 mA
Data Format	Configurable
Step Response to 99% of FS	80 ms
Module from Adapter Best/Worst Update Time	200 ms/1600 µs
Indicators	8 red fault indicators 8 yellow channel indicators 1 green power indicator
Inputs (Intrinsically Safe) (Terminals: 0…2; 4…6; 8…10; 12…14; 17…19; 21…23; 25…27; 29…31)	$U_0 \leq 24.4V$ $I_0 \leq 92.5$ mA $P_0 \leq 565$ mW
Isolation Path Input to Power Supply Input to Flexbus Input to Input Power Supply to Flexbus	Isolation Type Galvanic to DIN EN60079-11 Galvanic to DIN EN60079-11 None Galvanic to DIN EN60079-11
Power Supply (+V, -V intrinsically safe) (Terminals: 34/50 (+): 35/51 (-))	$U_i \leq 9.5V$ dc $I_i \leq 1$ A L_i = Negligible C_i = 120 nF
Module Field-side Power Consumption	7.1 W
Power Dissipation	3.9 W
Thermal Dissipation	13.5 BTU/hr
Module Location	Cat. No. 1797-TB3 or 1797-TB3S
Conductor Wire Size	4 mm^2 (12 AWG) stranded max 1.2 mm (3/64 in.) insulation max
Dimensions Metric Imperial	46 mm x 94 mm x 75 mm (1.8 in. x 3.7 in. x 2.95 in.)
Weight	200 g (approximately)
Keyswitch Position	8
Environmental Conditions	
Operational Temperature	-20…+70 °C (-4…+158 °F)
Storage Temperature	-40…+85 °C (-40…+185 °F)
Relative Humidity	5…95% noncondensing
Shock Operating	Tested to 15 g peak acceleration, 11(+1) ms pulse width
Nonoperating	Tested to 15 g peak acceleration, 11(+1) ms pulse width
Vibration	Tested 2 g @ 10…500 Hz per IEC68-2-6

Agency Certification	
CENELEC	II (1) 2G Ex ib[ia] IIC T4 II (1) D [Ex iaD
FM	Intrinsically safe Class I, Div 1, Groups A, B, C, D, T4. Associated Apparatus with intrinsically safe Connections Class I, II, III, Div 1, Groups A--G
IECEx	Intrinsically safe Class I, Zone 1, AEx ib[ia] IIC T4. [Zone 0] Ex ib[ia] IIC T4 [Ex iaD]
Certificates	
CENELEC	DMT 98 ATEX E 020 X
FM	FM Certificate Number 3009806
IECEx	IECEx BVS 09.0030X

Entity Parameters

1797-IE8 and 1797-IE8NF CE, CENELEC I/O Entity Parameters

Measurement input (sig to -) for channels 0…7 (terminals: 1…2; 5…6; 9…10; 13…14; 18…19; 22…23; 26…27; 30…31)

	Protection	Group	Allowed Capacitance	Allowed Inductance
U_o = 5V I_o = 1 mA P_o = 1.3 mW	Ex ia	IIB	1000 µF	1 H
U_i = 28V I_i = 110 mA C_i and L_i negligible		IIC	100 µF	1 H

Source output (+ to sig) for ch 0 to ch 7
(terminals: 0 to 1; 4 to 5; 8 to 9; 12 to 13; 17 to 18; 21 to 22; 25 to 26; 29 to 30)

	Protection	Group	Allowed Capacitance	Allowed Inductance
U_o = 23.7V I_o = 92.5 mA P_o = 548 mW	Ex ia	IIB	560 nF	10 mH
		IIC	66 nF	2.5 mH

If concentrated capacitance and/or inductance are available, use the following values.	Ex ia	IIB	320 nF	10 mH
		IIC	60 nF	2 mH

1797-IE8H CE, CENELEC I/O Entity Parameters

Source output plus measurement input (+ to -) for channels 0…7 (terminals: 0…2; 4…6; 8…10; 12…14; 17…19; 21…23; 25…27; 29…31)

	Protection	Allowed Capacitance	Allowed Inductance
U_0 = 24.4V I_0 = 92.5 mA P_0 = 565 mW C_i = Negligible L_i = Negligible	Ex ia	119 nF	4 mH

1797-IE8 and 1797-IE8NF UL, C-UL I/O Entity Parameters

If this product has the UL/C-UL mark, it has been designed, evaluated, tested, and certified to meet the following standards:

- UL 913, 1988, Intrinsically Safe Apparatus and Associated Apparatus for Use in Class I, II, and III Division 1, Hazardous (Classified) Locations
- UL 1203, Explosion-Proof and Dust-Ignition-Proof Electrical Equipment for Use in Hazardous (Classified) Locations
- UL 2279, Electrical Equipment for Use in Class I, Zone 0, 1, and 2 Hazardous (Classified) Locations
- UL 61010, UL Standard for Safety Electrical Equipment For Measurement, Control, and Laboratory Use; Part 1: General Requirements
- CSA C22.2 No. 157-92, Intrinsically Safe and Non-Incendive Equipment for Use in Hazardous Locations
- CSA C22.2 No. 30-M1986, Explosion-Proof Enclosures for Use in Class I Hazardous Locations

- CSA-E79-0-95, Electrical Apparatus for Explosive Gas Atmospheres, Part 0: General Requirements
- CSA-E79-11-95, Electrical Apparatus for Explosive Gas Atmospheres, Part 11: Intrinsic Safety “i”
- CSA C22.2 No. 14-95, Industrial Control Equipment

Wiring Methods

- Wiring method 1 - Each channel is wired separately.
- Wiring method 2 - Multiple channels in one cable, providing each channel is separated in accordance with the National Electric Code (NEC) or Canadian Electric Code (CEC).

Table 1

Wiring Method	Channel	Terminals	V_{oc} (V)	I_{sc} (mA)	V_t (V)	I_t (mA)	Groups	C_a (µF)	L_a (mH)
1 and 2	Any one channel, for example, ch0	0(+), 1(sig)	23.7	92.5	-	-	A, B, IIC	0.06	2.0
							C, E, IIB	0.18	8.0
							D, F, G, IIA	0.48	16.0
		1(sig), 2(-)	5	1.0	-	-	A, B, IIC	100	1000
							C, E, IIB	300	1000
							D, F, G, IIA	800	1000
		0(+), 1(sig), 2(-)	-	-	23.7	93.5	A, B, IIC	0.06	2.0
							C, E, IIB	0.18	8.0
							D, F, G, IIA	0.48	16.0

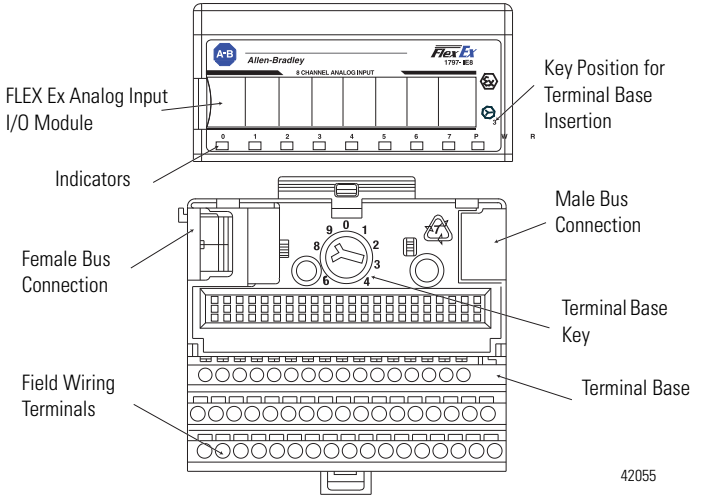

IMPORTANT A terminal base may or may not have an I/O module installed.

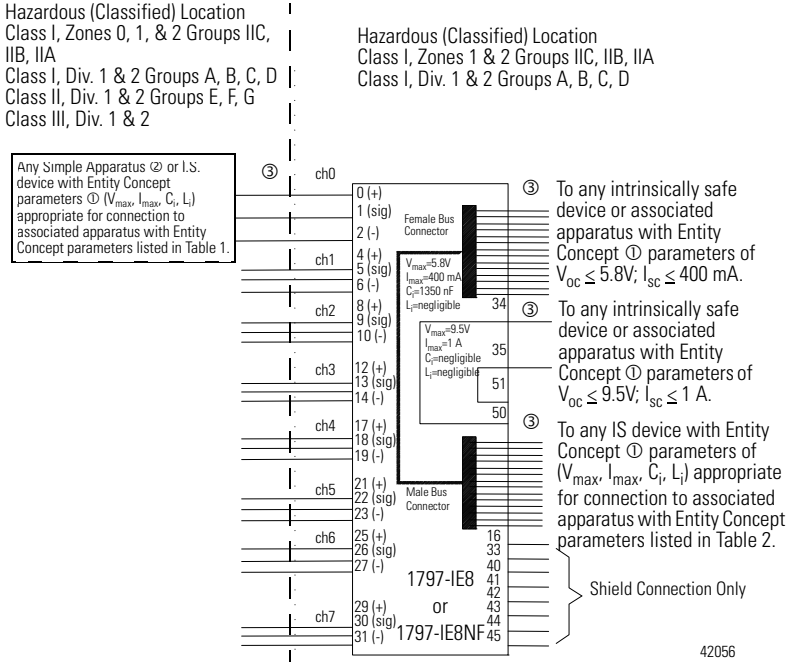

Table 2

Terminals	V_t (V)	I_t (mA)	Groups	C_a (μF)	L_a (μH)
Male Bus Connector	5.8	400	A…G	3.0	3.0

① The entity concept allows interconnection of intrinsically safe apparatus with associated apparatus not specifically examined in combination as a system when the approved values of V_{oc} and I_{sc} or V_t and I_t of the associated apparatus are less than or equal to V_{max} and I_{max} of the intrinsically safe

apparatus and the approved values of C_a and L_a of the associated apparatus are greater than $C_i + C_{cable}$ and $L_i + L_{cable}$ respectively for the intrinsically safe apparatus. The internal capacitances of C_i of the terminal base must be taken into account to verify the intrinsic safety.

② Simple apparatus is defined as a device which neither generates nor stores more than 1.2V, 0.1 A, 20 μJ, or 25 mW.

③ Wiring methods must be in accordance with the National Electric Code, ANSI/NFPA 70, Article 504 and 505 or the Canadian Electric Code CSA C22.1, Part 1, Appendix F. For additional information refer to ANSI/ISA RP12.6.

④ This module, 1797-IE8, must be used with terminal base 1797-TB3 or 1797-TB3S.

⑤ Terminals 3, 7, 11, 15, 20, 24, 28, 32, 36-39, and 46 to 49 shall not be connected.

⑥ **WARNING**: Substitution of components may impair intrinsic safety. **AVERTISSEMENT:** La substitution de composant peut compromettre la securite intrinseque.

1797-IE8, 1797-IE8H, and 1797-IE8NF FM I/O Entity Parameters

If this product has the FM mark, it has been designed, evaluated, tested, and certified to meet the following standards:

- FM C1. No.3600:1998, Electrical Equipment for Use in Hazardous (Classified) Locations General Requirements
- FM C1. No.3610:1999, Intrinsically Safe Apparatus and Associated Apparatus for Use in Class I, II, III Division 1 Hazardous (Classified) Locations
- FM C1. No.3615:1989, Explosionproof Electrical Equipment General Requirements
- FM C1. No.3810:1989, 1995, Electrical and Electronic Test, Measuring and Process Control Equipment
- ANSI/NEMA 250, 1991, Enclosures for Electrical Equipment

Wiring Methods

- Wiring method 1 - Each channel is wired separately.
- Wiring method 2 - Multiple channels in one cable, providing each channel is separated in accordance with the National Electric Code (NEC).

FM I/O Entity Parameters for 1797-IE8 and 1797-IE8NF

Wiring Method	Channel	Terminals	V_{oc} (V)	I_{sc} (mA)	V_{max} (V)	I_{max} (mA)	V_t (V)	I_t (mA)	Groups	C_a (μF)	L_a (mH)
1 and 2	Any one channel (for example, ch0)	0(+), 1(sig)	23.7	92.5	-	-	-	-	A, B, IIC	0.06	2.0
									C, E, IIB	0.18	8.0
									D, F, G, IIA	0.48	16.0
		1(sig), 2(-)	5	1.0	28.0	93.0	-	-	A, B, IIC	100	1000
									C, E, IIB	300	1000
									D, F, G, IIA	800	1000
		0(+), 1(sig), 2(-)	-	-	-	-	23.7	93.5	A, B, IIC	0.06	2.0
									C, E, IIB	0.18	8.0
									D, F, G, IIA	0.48	16.0

FM I/O Entity Parameters for 1797-IE8H

Wiring Method	Channel	Terminals	V_{oc} (V)	I_{sc} (mA)	V_{max} (V)	I_{max} (mA)	Groups	C_a (μF)	L_a (mH)
1 and 2	Any one channel (for example, ch0)	0(+), 1(sig), 2(-)	24.4	92.5	-	-	A, B	0.119	4.0
							C, E	0.35	12.0
							D, F, G	0.95	32.0
		1(sig), 2(-)			28	110	A, B	0.119	4.0
							C, E	0.35	12.0
							D, F, G	0.95	32.0

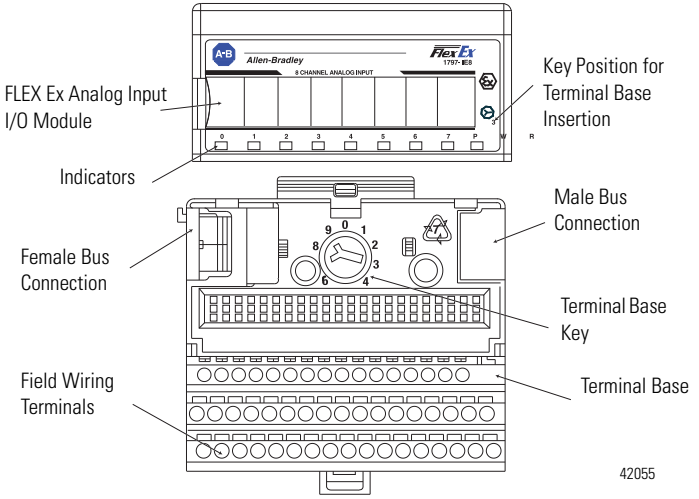

IMPORTANT A terminal base may or may not have an I/O module installed.

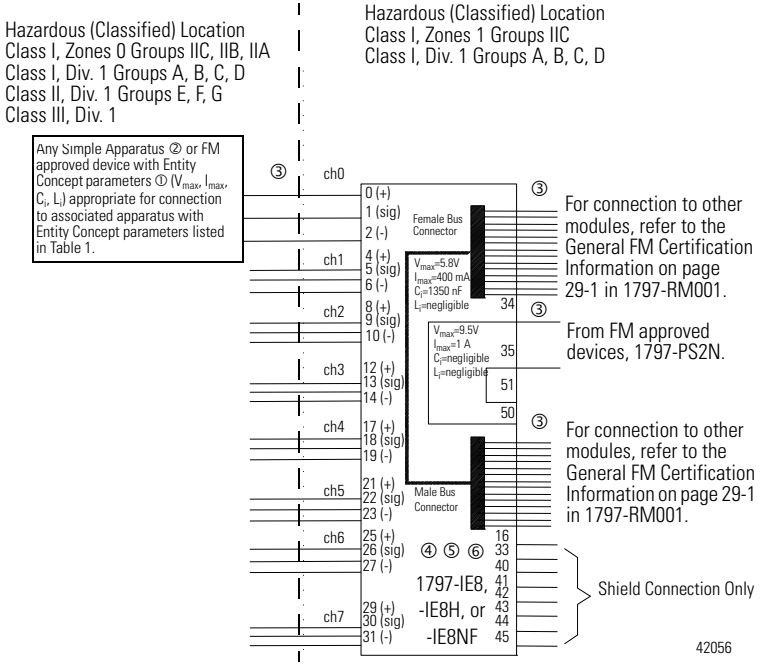

Flexbus Entity Values Which are Allowed for the Next FLEX Ex I/O Module

Terminals	V_t (V)	I_t (mA)	Groups	C_a (µF)	L_a (µH)
Male Bus Connector	5.8	400	A…G	3.0	3.0

Flexbus Entity Values for This Module

Any combination of up to eight FLEX Ex I/O modules may be attached on a flexbus.

Terminals	V_t (V)	I_t (mA)	Groups	C_a (μF)	L_a (μH)
Female Bus Connector	5.8	400	A…D	3.0	3.0

① The entity concept allows interconnection of intrinsically safe apparatus with associated apparatus not specifically examined in combination as a system when the approved values of V_{oc} and I_{sc} or V_t and I_t of the associated apparatus are less than or equal to V_{max} and I_{max} of the intrinsically safe apparatus and the approved values of C_a and L_a of the associated apparatus are greater than $C_i + C_{cable}$ and $L_i + L_{cable}$ respectively for the intrinsically safe apparatus.

② Simple apparatus is defined as a device which neither generates nor stores more than 1.2V, 0.1 A, 20 μJ, or 25 mW.

③ Wiring methods must be in accordance with the National Electric Code, ANSI/NFPA 70, Article 504 and 505. For additional information refer to ANSI/ISA RP12.6.

④ This module, 1797-IE8, 1797-IE8H, or 1797-IE8NF must be used with terminal base 1797-TB3 or 1797-TB3S.

⑤ Terminals 3, 7, 11, 15, 20, 24, 28, 32, 36-39, and 46 to 49 shall not be connected.

⑥ WARNING: Substitution of components may impair intrinsic safety.

IMPORTANT For detailed certification information, refer to the FLEX Ex System Certification Reference Manual, publication 1797-RM001.

Attention: Avoid electrostatic charging.

ATENÇÃO! PREVENIR CONTRA O ACÚMULO DE CARGA ELETROSTÁTICA.

Rockwell Automation Support

Rockwell Automation provides technical information on the Web to assist you in using its products. At http://support.rockwellautomation.com, you can find technical manuals, a knowledge base of FAQs, technical and application notes, sample code and links to software service packs, and a MySupport feature that you can customize to make the best use of these tools.

For an additional level of technical phone support for installation, configuration, and troubleshooting, we offer TechConnect support programs. For more information, contact your local distributor or Rockwell Automation representative, or visit http://support.rockwellautomation.com.

Installation Assistance

If you experience a problem within the first 24 hours of installation, please review the information that's contained in this manual. You can also contact a special Customer Support number for initial help in getting your product up and running.

United States	1.440.646.3434 Monday – Friday, 8 a.m. – 5 p.m. EST
Outside United States	Please contact your local Rockwell Automation representative for any technical support issues.

New Product Satisfaction Return

Rockwell Automation tests all of its products to ensure that they are fully operational when shipped from the manufacturing facility. However, if your product is not functioning and needs to be returned, follow these procedures.

United States	Contact your distributor. You must provide a Customer Support case number (see phone number above to obtain one) to your distributor in order to complete the return process.
Outside United States	Please contact your local Rockwell Automation representative for the return procedure.

Allen-Bradley, Rockwell Automation, TechConnect, and Flex Ex are trademarks of Rockwell Automation, Inc. Trademarks not belonging to Rockwell Automation are property of their respective companies.

Rockwell Automation maintains current product environmental information on its website at http://www.rockwellautomation.com/rockwellautomation/about-us/sustainability-ethics/product-environmental-compliance.page.

www.rockwellautomation.com

Power, Control and Information Solutions Headquarters

Americas: Rockwell Automation, 1201 South Second Street, Milwaukee, WI 53204-2496 USA, Tel: (1) 414.382.2000, Fax: (1) 414.382.4444
Europe/Middle East/Africa: Rockwell Automation NV, Pegasus Park, De Kleetlaan 12a, 1831 Diegem, Belgium, Tel: (32) 2 663 0600, Fax: (32) 2 663 0640
Asia Pacific: Rockwell Automation, Level 14, Core F, Cyberport 3, 100 Cyberport Road, Hong Kong, Tel: (852) 2887 4788, Fax: (852) 2508 1846

Publication 1797-IN005J-EN-P - August 2017 PN-455776

Supersedes Publication 1797-IN005I-EN-P - September 2011 Copyright © 2017 Rockwell Automation, Inc. All rights reserved. Printed in Singapore.