Installation Instructions

Allen-Bradley

POINT I/O RTD and Isolated Thermocouple Input Modules

Catalog Numbers 1734-IR2, 1734-IR2K, 1734-IR2E, 1734-IT2I, 1734-IT2IK, Series C

Catalog numbers with the suffix 'K' are conformal coated and their specifications are the same as non-conformal coated catalogs.

Table of Contents

Topic	Page
Important User Information	2
Environment and Enclosure	3
Prevent Electrostatic Discharge	3
North American Hazardous Location Approval	4
European Hazardous Location Approval	5
Before You Begin	7
Install the Mounting Base	9
Install the Module	10
Install the Removable Terminal Block	12
Remove a Mounting Base	14
Wire the Module	15
Communicate with the Module	17
Interpret Status Indicators	18
Specifications	20

Important User Information

Solid-state equipment has operational characteristics differing from those of electromechanical equipment. Safety Guidelines for the Application, Installation, and Maintenance of Solid-State Controls (Publication SGI-1.1 available from your local Rockwell Automation Sales Office or online at http://www.rockwellautomation.com/literature/) describes some important differences between solid-state equipment and hard-wired electromechanical devices. Because of this difference, and also because of the wide variety of uses for solid-state equipment, all persons responsible for applying this equipment must satisfy themselves that each intended application of this equipment is acceptable.

In no event will Rockwell Automation, Inc. be responsible or liable for indirect or consequential damages resulting from the use or application of this equipment.

The examples and diagrams in this manual are included solely for illustrative purposes. Because of the many variables and requirements associated with any particular installation, Rockwell Automation, Inc. cannot assume responsibility or liability for actual use based on the examples and diagrams.

No patent liability is assumed by Rockwell Automation, Inc. with respect to use of information, circuits, equipment, or software described in this manual.

Reproduction of the contents of this manual, in whole or in part, without written permission of Rockwell Automation, Inc., is prohibited.

Throughout this manual, when necessary, we use notes to make you aware of safety considerations.

	WARNING: Identifies information about practices or circumstances that can cause an explosion in a hazardous environment, which may lead to personal injury or death, property damage, or economic loss.
	ATTENTION: Identifies information about practices or circumstances that can lead to personal injury or death, property damage, or economic loss. Attentions help you identify a hazard, avoid a hazard, and recognize the consequences.
	SHOCK HAZARD: Labels may be on or inside the equipment (for example, drive or motor) to alert people that dangerous voltage may be present.
	BURN HAZARD: Labels may be on or inside the equipment (for example, drive or motor) to alert people that surfaces may reach dangerous temperatures.
IMPORTANT	Identifies information that is critical for successful application and understanding of the product.

Environment and Enclosure

ATTENTION: This equipment is intended for use in a Pollution Degree 2 industrial environment, in overvoltage Category II applications (as defined in EN/IEC 60664-1), at altitudes up to 2000 m (6562 ft) without derating.

This equipment is not intended for use in residential environments and may not provide adequate protection to radio communication services in such environments.

This equipment is supplied as open-type equipment for indoor use. It must be mounted within an enclosure that is suitably designed for those specific environmental conditions that will be present and appropriately designed to prevent personal injury resulting from accessibility to live parts. The enclosure must have suitable flame-retardant properties to prevent or minimize the spread of flame, complying with a flame spread rating of 5VA or be approved for the application if nonmetallic. The interior of the enclosure must be accessible only by the use of a tool. Subsequent sections of this publication may contain more information regarding specific enclosure type ratings that are required to comply with certain product safety certifications.

In addition to this publication, see the following:

- Industrial Automation Wiring and Grounding Guidelines, publication 1770-4.1, for more installation requirements.
- NEMA Standard 250 and EN/IEC 60529, as applicable, for explanations of the degrees of protection provided by enclosures.

Prevent Electrostatic Discharge

ATTENTION: This equipment is sensitive to electrostatic discharge which can cause internal damage and affect normal operation. Follow these guidelines when you handle this equipment.

- Touch a grounded object to discharge potential static.
- Wear an approved grounding wriststrap.
- Do not touch connectors or pins on component boards.
- Do not touch circuit components inside the equipment.
- Use a static-safe workstation if available.
- Store the equipment in appropriate static-safe packaging when not in use.

North American Hazardous Location Approval

The following information applies when operating this equipment in hazardous locations:	**Informations sur l'utilisation de cet équipement en environnements dangereux:**
Products marked "CL I, DIV 2, GP A, B, C, D" are suitable for use in Class I Division 2 Groups A, B, C, D, Hazardous Locations and nonhazardous locations only. Each product is supplied with markings on the rating nameplate indicating the hazardous location temperature code. When combining products within a system, the most adverse temperature code (lowest "T" number) may be used to help determine the overall temperature code of the system. Combinations of equipment in your system are subject to investigation by the local Authority Having Jurisdiction at the time of installation.	Les produits marqués "CL I, DIV 2, GP A, B, C, D" ne conviennent qu'à une utilisation en environnements de Classe I Division 2 Groupes A, B, C, D dangereux et non dangereux. Chaque produit est livré avec des marquages sur sa plaque d'identification qui indiquent le code de température pour les environnements dangereux. Lorsque plusieurs produits sont combinés dans un système, le code de température le plus défavorable (code de température le plus faible) peut être utilisé pour déterminer le code de température global du système. Les combinaisons d'équipements dans le système sont sujettes à inspection par les autorités locales qualifiées au moment de l'installation.
EXPLOSION HAZARD • Do not disconnect equipment unless power has been removed or the area is known to be nonhazardous. • Do not disconnect connections to this equipment unless power has been removed or the area is known to be nonhazardous. Secure any external connections that mate to this equipment by using screws, sliding latches, threaded connectors, or other means provided with this product. • Substitution of components may impair suitability for Class I, Division 2.	**RISQUE D'EXPLOSION** • Couper le courant ou s'assurer que l'environnement est classé non dangereux avant de débrancher l'équipement. • Couper le courant ou s'assurer que l'environnement est classé non dangereux avant de débrancher les connecteurs. Fixer tous les connecteurs externes reliés à cet équipement à l'aide de vis, loquets coulissants, connecteurs filetés ou autres moyens fournis avec ce produit. • La substitution de composants peut rendre cet équipement inadapté à une utilisation en environnement de Classe I, Division 2.

European Hazardous Location Approval

The following applies to products marked CE Ex II 3 G:

- Are intended for use in potentially explosive atmospheres as defined by European Union Directive 2014/34/EU and has been found to comply with the Essential Health and Safety Requirements relating to the design and construction of Category 3 equipment intended for use in Zone 2 potentially explosive atmospheres, given in Annex II to this Directive.
- Compliance with the Essential Health and Safety Requirements has been assured by compliance with EN 60079-15 and EN 60079-0.
- Are Equipment Group II, Equipment Category 3, and comply with the Essential Health and Safety Requirements relating to the design and construction of such equipment given in Annex II to EU Directive 2014/34/EU. See the EU Declaration of Conformity at http://www.rockwellautomation.com/global/certification/overview.page for details.
- The type of protection is Ex nA IIC T4 Gc according to EN 60079-15.
- Comply to Standards EN 60079-0:2012+A11:2013, EN 60079-15:2010, reference certificate number DEMKO 04 ATEX 0330347X.
- Are intended for use in areas in which explosive atmospheres caused by gases, vapors, mists, or air are unlikely to occur, or are likely to occur only infrequently and for short periods. Such locations correspond to Zone 2 classification according to ATEX directive 2014/34/EU.
- May have catalog numbers followed by a “K” to indicate a conformal coating option.

WARNING: Special Conditions for Safe Use:

- This equipment is not resistant to sunlight or other sources of UV radiation.
- This equipment shall be mounted in an ATEX/IECEx Zone 2 certified enclosure with a minimum ingress protection rating of at least IP54 (in accordance with EN/IEC 60079-15) and used in an environment of not more than Pollution Degree 2 (as defined in EN/IEC 60664-1) when applied in Zone 2 environments. The enclosure must be accessible only by the use of a tool.
- This equipment shall be used within its specified ratings that are defined by Rockwell Automation.
- Provision shall be made to prevent the rated voltage from being exceeded by transient disturbances of more than 140% of the peak rated voltage when applied in Zone 2 environments.
- The instructions in the user manual shall be observed.
- This equipment must be used only with ATEX certified Rockwell Automation backplanes.
- Earthing is accomplished through mounting of modules on rail.
- Devices shall be used in an environment of not more than Pollution Degree 2.

ATTENTION: If this equipment is used in a manner not specified by the manufacturer, the protection provided by the equipment may be impaired.

ATTENTION: Read this document and the documents listed in the Additional Resources section about installation, configuration, and operation of this equipment before you install, configure, operate, or maintain this product. Users are required to familiarize themselves with installation and wiring instructions in addition to requirements of all applicable codes, laws, and standards.

ATTENTION: Installation, adjustments, putting into service, use, assembly, disassembly, and maintenance are required to be carried out by suitably trained personnel in accordance with applicable code of practice.
In case of malfunction or damage, no attempts at repair should be made. The module should be returned to the manufacturer for repair. Do not dismantle the module.

ATTENTION: This equipment is certified for use only within the surrounding air temperature range of -20…+55 °C (-4…+131 °F). The equipment must not be used outside of this range.

ATTENTION: Use only a soft dry anti-static cloth to wipe down equipment. Do not use any cleaning agents.

WARNING: Secure any external connections that mate to this equipment by using screws, sliding latches, threaded connectors, or other means provided with this product.

WARNING: Do not disconnect equipment unless power has been removed or the area is known to be nonhazardous.

ATTENTION: To comply with the CE Low Voltage Directive (LVD), this equipment must be powered from a source compliant with the Safety Extra Low Voltage (SELV) or Protected Extra Low Voltage (PELV).

Before You Begin

Note that this series C product can be used with the following:

- DeviceNet® and PROFIBUS adapters
- ControlNet® and EtherNet/IP™ adapters, using RSLogix 5000® software, version 11 or later

See the figures to familiarize yourself with major parts of the module, noting that the wiring base assembly is one of the following:

- 1734-TB or 1734-TBS POINT I/O™ two-piece terminal base, which includes the 1734-RTB or 1734-RTBS removable terminal block, and 1734-MB mounting base
- 1734-TOP or 1734-TOPS POINT I/O one-piece terminal base

POINT I/O Module with 1734-TB or 1734-TBS Base

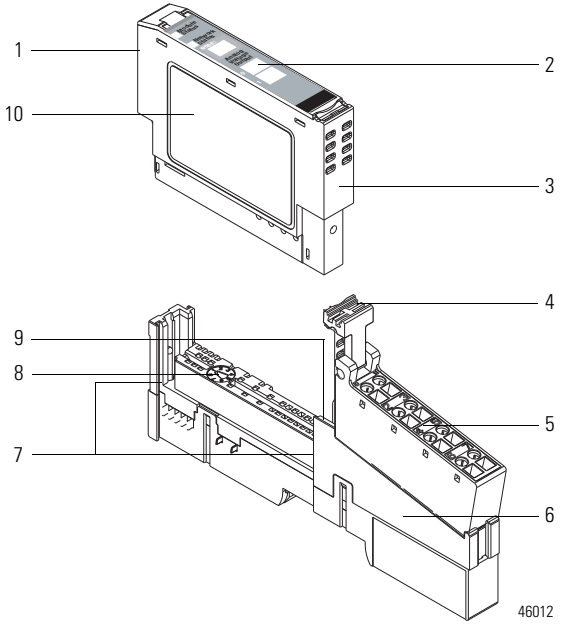

	Description		Description
1	Module locking mechanism	6	1734-TB or 1734-TBS mounting base
2	Slide-in writable label	7	Interlocking side pieces
3	Insertable I/O module	8	Mechanical keying (orange)
4	Removable terminal block (RTB) handle	9	DIN rail locking screw (orange)
5	Removable terminal block with screw (1734-RTB) or spring clamp (1734-RTBS)	10	Module wiring diagram

POINT I/O Module with 1734-TOP or 1734-TOPS Base

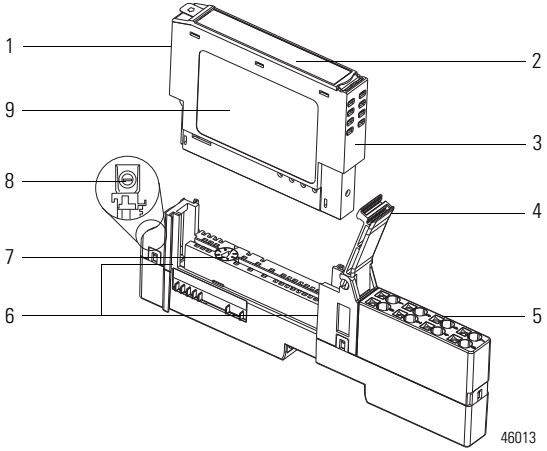

	Description		Description
1	Module locking mechanism	6	Interlocking side pieces
2	Slide-in writable label	7	Mechanical keying (orange)
3	Insertable I/O module	8	DIN rail locking screw (orange)
4	Removable terminal block (RTB) handle	9	Module wiring diagram
5	One-piece terminal base with screw (1734-TOP) or spring clamp (1734-TOPS)		

Install the Mounting Base

To install the mounting base on the DIN rail (Allen-Bradley® part number 199-DR1; 46277-3; EN50022), proceed as follows.

ATTENTION: This product is grounded through the DIN rail to chassis ground. Use zinc plated chromate-passivated steel DIN rail to assure proper grounding. The use of other DIN rail materials (for example, aluminum or plastic) that can corrode, oxidize, or are poor conductors, can result in improper or intermittent grounding. Secure DIN rail to mounting surface approximately every 200 mm (7.8 in.) and use end-anchors appropriately. Be sure to ground the DIN rail properly. Refer to Industrial Automation Wiring and Grounding Guidelines, Rockwell Automation publication 1770-4.1, for more information.

WARNING: When used in a Class I, Division 2, hazardous location, this equipment must be mounted in a suitable enclosure with proper wiring method that complies with the governing electrical codes.

1. Position the mounting base vertically above the installed units (adapter, power supply, or existing module).

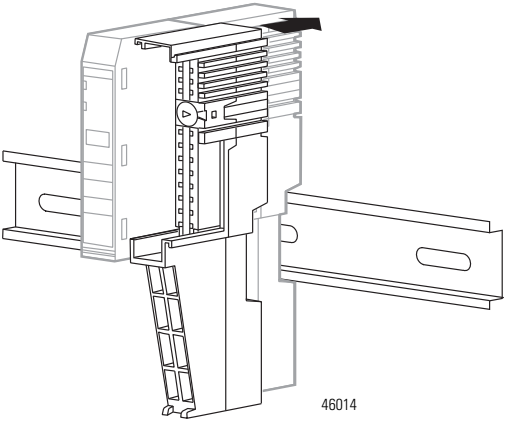

2. Slide the mounting base down to make the interlocking side pieces engage the adjacent module or adapter.
3. Press firmly to seat the mounting base on the DIN rail.
   The mounting base snaps into place. Be sure that the orange DIN rail locking screw is in the horizontal position and that it has engaged the DIN rail.

ATTENTION: Do not discard the end cap. Use this end cap to cover the exposed interconnections on the last mounting base on the DIN rail. Failure to do so could result in equipment damage or injury from electric shock.

Install the Module

The module can be installed before or after base installation. Make sure that the mounting base is correctly keyed before installing the module into the mounting base. In addition, make sure the mounting base locking screw is positioned horizontal referenced to the base.

WARNING: When you insert or remove the module while backplane power is on, an electrical arc can occur. This could cause an explosion in hazardous location installations.

Be sure that power is removed or the area is nonhazardous before proceeding. Repeated electrical arcing causes excessive wear to contacts on both the module and its mating connector. Worn contacts may create electrical resistance that can affect module operation.

To install the module, proceed as follows.

1. Use a bladed screwdriver to rotate the keyswitch on the mounting base clockwise until the number required for the type of module you are installing aligns with the notch in the base.
2. Verify the DIN rail locking screw is in the horizontal position.
   You cannot insert the module if the locking mechanism is unlocked.

1734-TB Base

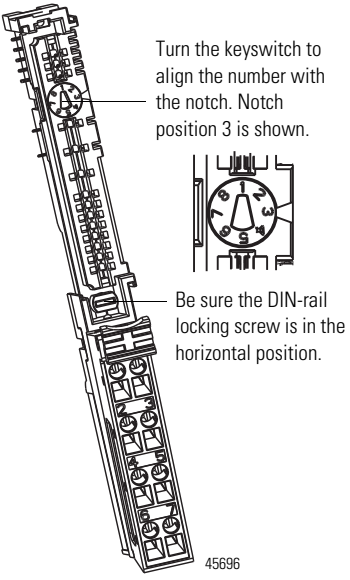

1734-TOP Base

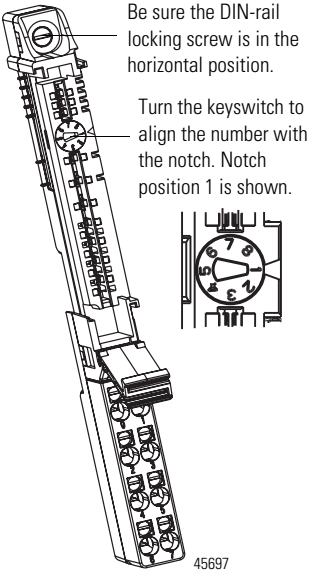

3. Insert the module straight down into the mounting base and press to secure. The module locks into place.

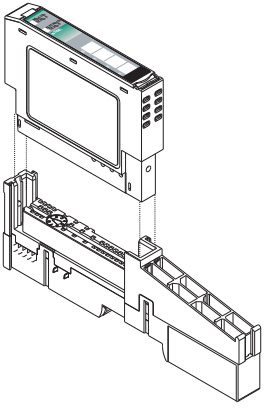

Install the Removable Terminal Block

A Removable Terminal Block (RTB) is supplied with your wiring base assembly. To remove, pull up on the RTB handle. This allows the mounting base to be removed and replaced as necessary without removing any of the wiring. To reinsert the Removable Terminal Block, proceed as follows.

WARNING: When you connect or disconnect the Removable Terminal Block (RTB) with field-side power applied, an electrical arc can occur. This can cause an explosion in hazardous location installations.

Be sure that power is removed or the area is nonhazardous before proceeding.

1. Insert the end opposite the handle into the base unit.
   This end has a curved section that engages with the wiring base.
2. Rotate the terminal block into the wiring base until it locks itself in place.
3. If an I/O module is installed, snap the RTB handle into place on the module.

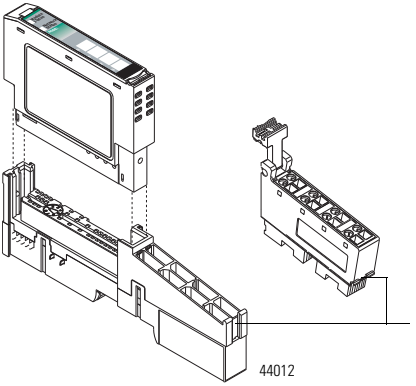

WARNING: For 1734-RTBS and 1734-RTB3S, to latch and unlatch the wire, insert a bladed screwdriver (catalog number 1492-N90 – 3 mm diameter blade) into the opening at approximately 73° (blade surface is parallel with top surface of the opening) and push up gently.

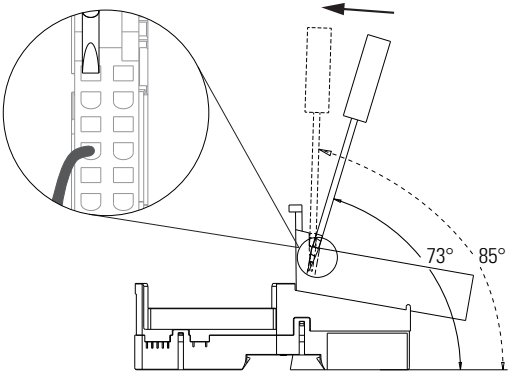

WARNING: For 1734-TOPS and 1734-TOP3S, to latch and unlatch the wire, insert a bladed screwdriver (catalog number 1492-N90 – 3 mm diameter) into the opening at approximately 97° (blade surface is parallel with top surface of the opening) and press in (do not push up or down).

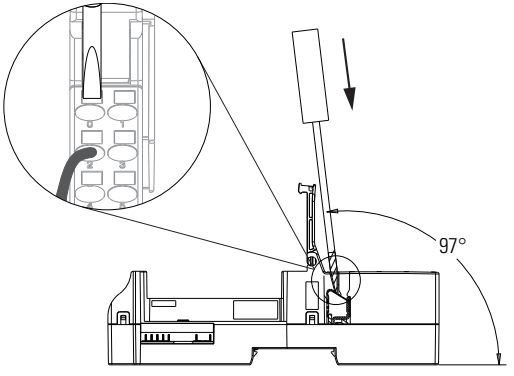

Remove a Mounting Base

To remove a mounting base, you must remove any installed module and the module installed in the base to the right. Remove the removable terminal block, if wired.

WARNING: When you insert or remove the module while backplane power is on, an electrical arc can occur. This could cause an explosion in hazardous location installations.

Be sure that power is removed or the area is nonhazardous before proceeding. Repeated electrical arcing causes excessive wear to contacts on both the module and its mating connector. Worn contacts may create electrical resistance that can affect module operation.

WARNING: When you connect or disconnect the Removable Terminal Block (RTB) with field-side power applied, an electrical arc can occur. This can cause an explosion in hazardous location installations.

Be sure that power is removed or the area is nonhazardous before proceeding.

1. Unlatch the RTB handle on the I/O module.
2. Pull on the RTB handle to remove the removable terminal block.
3. Press the module lock on the top of the module.
4. Pull on the I/O module to remove from the base.
5. Repeat steps 1, 2, 3, and 4 for the module to the right.
6. Use a small-bladed screwdriver to rotate the orange, base locking screw to a vertical position.
   This releases the locking mechanism.
7. Lift straight up to remove.

Wire the Module

WARNING: If you connect or disconnect wiring while the field-side power is on, an electrical arc can occur. This could cause an explosion in hazardous location installations. Be sure that power is removed or the area is nonhazardous before proceeding.

POINT I/O RTD Input Module – 1734-IR2, 1734-IR2K, 1734-IR2E

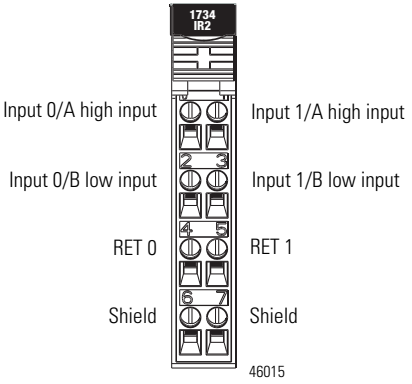

POINT I/O RTD Input Module Wiring – 1734-IR2, 1734-IR2K, 1734-IR2E

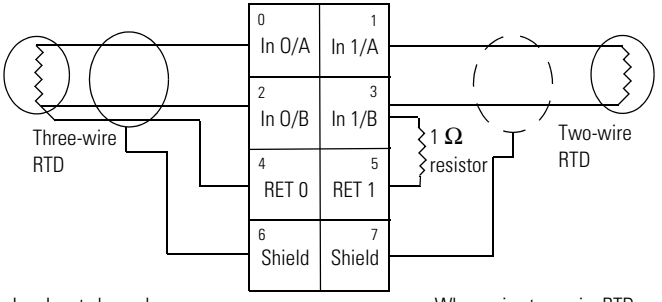

In = Input channel,
RET = Sensor return,
Shield = Sensor cable shield.

When using two-wire RTDs, 1 Ω resistor In/B to RET.

POINT I/O RTD Input Module Wiring – 1734-IR2, 1734-IR2K, 1734-IR2E

Channel	High Signal (+)	Low Signal (-)	Return	Shield
In 0/A	0		4	6
In 0/B		2		
In 1/A	1		5	7
In 1/B		3		

TIP For improved 1734-RTB calibration wiring diagrams, refer to the POINT I/O™ RTD and Isolated Thermocouple Input Modules Release Notes, publication, 1734-RN005.

POINT I/O Isolated Thermocouple Input Module Wiring – 1734-IT2I, 1734-IT2IK

0+ = Input channel 0 high
0- = Input channel 0 low
1+ = Input channel 1 high
1- = Input channel 1 low

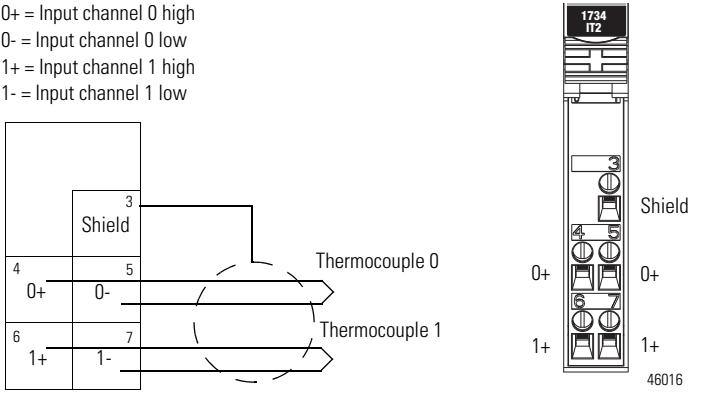

Channel	Input High	Input Low	Shield
0+	4		3
0-		5	
1+	6		3
1-		7	

Power is provided by the internal power bus.

Communicate with the Module

POINT I/O modules send (produce) and receive (consume) I/O data (messages). You map this data onto the processor's memory.

The 1734-IR2, 1734-IR2K, and 1734-IR2E modules produce 6 bytes of input data (scanner Rx) and fault status data. The 1734-IT2I and 1734-IT2IK modules produce 8 bytes of input data (scanner Rx) and fault status data. The modules do not consume I/O data (scanner Tx).

Default Data Map for RTD Input Module – 1734-IR2, 1734-IR2K, 1734-IR2E

Message size: 6 Bytes

Produces (scanner Rx)	Input channel 0 – high byte								Input channel 0 – low byte							
	Input channel 1 – high byte								Input channel 1 – low byte							
	Status byte for channel 1								Status byte for channel 0							
	OR	UR	HHA	LLA	HA	LA	CM	CF	OR	UR	HHA	LLA	HA	LA	CM	CF
Consumes (scanner Tx)	No consumed data															
Where:	OR = Overrange; 0 = No error, 1 = Fault UR = Underrange; 0 = No error, 1 = Fault HHA = High/High Alarm; 0 = No error, 1 = Fault LLA = Low/Low Alarm; 0 = No error, 1 = Fault HA = High Alarm; 0 = No error, 1 = Fault LA = Low Alarm; 0 = No error, 1 = Fault CM = Calibration Mode; 0 = Normal, 1 = Calibration mode CF = Channel Fault Status; 0 = No error, 1 = Fault															

Default Data Map for Isolated Thermocouple Input Module – 1734-IT2I, 1734-IT2IK

Message size: 8 Bytes

Produces (scanner Rx)	Input channel 0 – high byte								Input channel 0 – low byte						
	Input channel 1 – high byte								Input channel 1 – low byte						
	Status byte for channel 1								Status byte for channel 0						
	OR	UR	HHA	LLA	HA	LA	CM	CF	OR	UR	HHA	LLA	HA	LA	CM
	OR	UR	Cold Junction Temperature (Selectable: channel 0, channel 1, or average of both channels 0 and 1)												
Consumes (scanner Tx)	No consumed data														
Where:	OR = Overrange; 0 = No error, 1 = Fault UR = Underrange; 0 = No error, 1 = Fault HHA = High/High Alarm; 0 = No error, 1 = Fault LLA = Low/Low Alarm; 0 = No error, 1 = Fault HA = High Alarm; 0 = No error, 1 = Fault LA = Low Alarm; 0 = No error, 1 = Fault CM = Calibration Mode; 0 = Normal, 1 = Calibration mode CF = Channel Fault Status; 0 = No error, 1 = Fault														

Interpret Status Indicators

Refer to the following diagram and table for information on how to interpret the status indicators.

POINT I/O RTD and Isolated Thermocouple Input Modules

1734-IR2,
1734-IR2K,
1734-IR2E

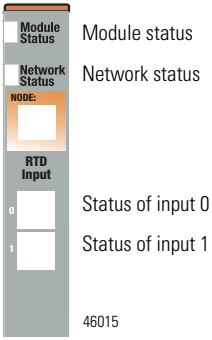

1734-IT2I,
1734-IT2IK

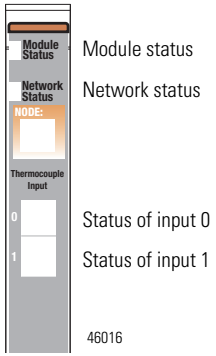

Indicator Status for Modules

	Status	Description
Module status	Off	No power applied to device.
	Green	Device operating normally.
	Flashing green	Device needs commissioning due to missing, incomplete, or incorrect configuration.
	Flashing red	Recoverable fault.
	Red	Unrecoverable fault occurred. Self-test failure present (checksum failure, or ramtest failure at cycle power). Firmware fatal error present.
	Flashing red/green	Device is in self-test mode.

Indicator Status for Modules

	Status	Description
Network status	Off	Device is not online: - Device has not completed dup_MAC-id test. - Device not powered – check module status indicator.
	Flashing green	Device is online but has no connections in the established state.
	Green	Device is online and has connections in the established state.
	Flashing red	One or more I/O connections are in timed-out state.
	Red	Critical link failure – failed communication device. Device detected error that prevents it from communicating on the network.
	Flashing red/green	Communication faulted device – the device has detected a network access error and is in communication faulted state. Device has received and accepted an Identity Communication Faulted Request – long protocol message.
Channel status	Off	Module is in CAL mode.
	Solid green	Normal operation is present with channel scanning inputs.
	Flashing green	Channel is being calibrated.
	Solid red	Major channel fault is present.
	Flashing red	Channel is at end of range (over or under).

Specifications

POINT I/O RTD Input Modules – 1734-IR2, 1734-IR2K, 1734-IR2E

Attribute	1734-IR2, 1734-IR2K	1734-IR2E
Number of inputs	2 single-ended, non-isolated	
Resolution	16 bits 9.5 mΩ/cnt 0.03 °C/cnt (Pt385 @ 25 °C) [0.05 °F/cnt (Pt385 @ 77 °F)]	16 bits 2.4 mΩ/cnt 0.006 °C/cnt (Pt385 @ 25 °C) [0.0114 °F/cnt (Pt385 @ 77 °F)]
Input range	0…600 Ω	0…220 Ω
Sensors supported	100 Ω Pt, α = 0.00385 Euro -200…870 °C (-328…1598 °F) 200 Ω Pt, α = 0.00385 Euro -200…630 °C (-328…1166 ° F) 100 Ω Pt, α = 0.003916 U.S. -200…630 °C (-328…1166 °F) 200 Ω Pt, α = 0.003916 U.S. -200…630 °C (-328…1166 °F) 10 Ω Cu, α = 0.00427 -200…260 °C (-328…500 °F) 100 Ω Ni, α = 0.00618 -60…250 °C (-76…482 °F) 120 Ω Ni, α = 0.00672 -60…250 °C (-76…482 °F) 120 Ω Ni, α = 0.00618 -60…250 °C (-76…482 °F)	100 Ω Pt, α = 0.00385 Euro -50…320 °C (-58…608 °F)
Absolute accuracy[(1)(2)]	0.1% Full Scale @ 25 °C (77 °F)	
Accuracy drift with temp(2).	30 ppm/°C	
Input update rate (per module)	40 ms @ Notch = 50 Hz 33 ms @ Notch = 60 Hz (default) 20 ms @ Notch = 100 Hz 17 ms @ Notch = 120 Hz 10 ms @ Notch = 200 Hz 8 ms @ Notch = 240 Hz 7 ms @ Notch = 300 Hz 5 ms @ Notch = 400 Hz 4 ms @ Notch = 480 Hz	
Step response (per channel)	60 ms @ Notch = 50 Hz 50 ms @ Notch = 60 Hz 30 ms @ Notch = 100 Hz 25 ms @ Notch = 120 Hz 15 ms @ Notch = 200 Hz 13 ms @ Notch = 240 Hz 10 ms @ Notch = 300 Hz 8 ms @ Notch = 400 Hz 6 ms @ Notch = 480 Hz	
Conversion type	Delta Sigma	

POINT I/O RTD Input Modules – 1734-IR2, 1734-IR2K, 1734-IR2E

Attribute	1734-IR2, 1734-IR2K	1734-IR2E
Common mode rejection ratio	120 dB	
Normal mode rejection ratio	100 dB	
Notch filter	-3 dB settable at the following: 13.1 Hz @ Notch = 50 Hz 15.7 Hz @ Notch = 60 Hz 26.2 Hz @ Notch = 100 Hz 31.4 Hz @ Notch = 120 Hz 52.4 Hz @ Notch = 200 Hz 62.9 Hz @ Notch = 240 Hz 78.6 Hz @ Notch = 300 Hz 104.8 Hz @ Notch = 400 Hz 125.7 Hz @ Notch = 380 Hz	
Data format	Signed integer	
Maximum overload	No input protection	
Calibration	Factory calibrated	

(1) Includes offset, gain, non-linearity, and repeatability error terms.

(2) Applies only to mV input for 1734-IT2I and 1734-IT2IK, and to ohms input for 1734-IR2, 1734-IR2K and 1734-IR2E modules. For more information on calculating Absolute Accuracy and Accuracy Drift, refer to POINT I/O Thermocouple and RTD Modules User Manual, publication 1734-UM004.

POINT I/O Isolated Thermocouple Input Module – 1734-IT2I, 1734-IT2IK

Attribute	Value			
Number of inputs	2 differential, individually isolated			
Resolution	15 bits plus sign 2.5 µV/cnt			
Thermocouple type (and resolution average over span)	**Sensor**	**Range**	**Resolution (Average Over Span)**	
	Type B	30…1820 °C	(86…3308 °F)	3 counts/°C
	Type C	0…2315 °C	(32…4199 °F)	6 counts/°C
	Type E	-270…1000 °C	(-454…1832 °F)	24 counts/°C
	Type J	-210…1200 °C	(-346…2192 °F)	21 counts/°C
	Type K	-270…1372 °C	(-454…2502 °F)	13 counts/°C
	Type N	-270…1300 °C	(-454…2373 °F)	11 counts/°C
	Type R	-50…1768.1 °C	(-58…3214 °F)	4 counts/°C
	Type S	-50…1768.1 °C	(-58…3214 °F)	4 counts/°C
	Type T	-270…400 °C	(-454…752 °F)	15 counts/°C
Cold junction compensation	Included in 1734-RTBCJC remote termination block.			
Cold junction compensation range	0…70 °C (32…158 °F)			

POINT I/O Isolated Thermocouple Input Module – 1734-IT2I, 1734-IT2IK

Attribute	Value
Input voltage	±75 mV
Absolute accuracy	0.1% Full Scale @ 25 °C (77 °F)
Accuracy drift with temp.	30 ppm/°C
Input impedance	100 KΩ
Input resistance	1 MΩ
Conversion type	Delta Sigma
Data format	Signed integer
Maximum overload	Input not overvoltage protected
Calibration	Factory calibrated
Input update rate (per module)	20 ms @ Notch = 50 Hz 17 ms @ Notch = 60 Hz (default) 10 ms @ Notch = 100 Hz 8 ms @ Notch = 120 Hz 5 ms @ Notch = 200 Hz 4 ms @ Notch = 240 Hz 3 ms @ Notch = 300 Hz 3 ms @ Notch = 400 Hz 2 ms @ Notch = 480 Hz
Step response (per channel)	60 ms @ Notch = 50 Hz 50 ms @ Notch = 60 Hz 30 ms @ Notch = 100 Hz 25 ms @ Notch = 120 Hz 15 ms @ Notch = 200 Hz 13 ms @ Notch = 240 Hz 10 ms @ Notch = 300 Hz 8 ms @ Notch = 400 Hz 6 ms @ Notch = 480 Hz
Common mode rejection rate	120 dB
Normal mode rejection rate	-60 dB
Notch filter	-3 dB settable at the following: 13.1 Hz @ Notch = 50 Hz 15.7 Hz @ Notch = 60 Hz 26.2 Hz @ Notch = 100 Hz 31.4 Hz @ Notch = 120 Hz 52.4 Hz @ Notch = 200 Hz 62.9 Hz @ Notch = 240 Hz 78.6 Hz @ Notch = 300 Hz 104.8 Hz @ Notch = 400 Hz 125.7 Hz @ Notch = 380 Hz

General Specifications

Attribute	Value
Terminal base	1734-TBCJC wiring base assembly – **1734-IT2I, 1734-IT2IK** 1734-TB, 1734-TBS, 1734-TOP, or 1734-TOPS wiring base assembly – **1734-IR2, 1734-IR2K, 1734-IR2E**
Terminal base screw torque	0.8 Nm (7 lb-in.)
Indicators, logic side	1 green/red – module status indicator 1 green/red – network status indicator 2 green/red – input status indicators
Keyswitch position	6
POINTBus current, max	175 mA @ 5V DC – **1734-IT2I, 1734-IT2IK** 220 mA @ 5V DC – **1734-IR2, 1734-IR2K, 1734-IR2E**
Power dissipation, max	1.0 W
Thermal dissipation, max	3.3 BTU/hr
Isolation voltage	50V (continuous), Basic Insulation Type, I/O to system Type tested @ 1600V AC for 60 s
External DC power	No external supply required
Dimensions (HxWxD), approx.	56 x 12 x 75.5 mm (2.21 x 0.47 x 2.97 in.)
Weight, approx.	0.036 kg (0.08 lb)
Wiring category(1) (2)	1 – on signal ports
Wire size	When using 1734-TBCJC, 0.25…2.5 mm^2 (22…14 AWG) shielded thermocouple wire, 1.2 mm (3/64 in.) insulation max When using 1734-TB, 1734-TBS, 1734-TOP or 1734-TOPS, 0.25…2.5 mm^2 (22…14 AWG) solid or stranded shielded copper wire rated at 75 °C (167 °F) or greater 1.2 mm (3/64 in.) insulation max
Enclosure type rating	None (open-style)
North American temp code	T5
ATEX temperature code	T4 – **1734-IR2**, **1734-IR2K, 1734-IT2I, 1734-IT2IK**

(1) Use this Conductor Category information for planning conductor routing as described in Industrial Automation Wiring and Grounding Guidelines, publication 1770-4.1.

(2) Use this Conductor Category information for planning conductor routing as described in the appropriate System Level Installation Manual.

At the end of its life, this equipment should be collected separately from any unsorted municipal waste.

Environmental Specifications

Attribute	Value
Temperature, operating	IEC 60068-2-1 (Test Ad, Operating Cold), IEC 60068-2-2 (Test Bd, Operating Dry Heat), IEC 60068-2-14 (Test Nb, Operating Thermal Shock): -20…55 °C (-4…131 °F)
Temperature, surrounding air, max.	55 °C (131 °F)
Temperature, nonoperating	IEC 60068-2-1 (Test Ab, Unpackaged Nonoperating Cold), IEC 60068-2-2 (Test Bb, Unpackaged Nonoperating Dry Heat), IEC 60068-2-14 (Test Na, Unpackaged Nonoperating Thermal Shock): -40…85 °C (-40…185 °F)
Relative humidity	IEC 60068-2-30 (Test Db, Unpackaged Damp Heat): 5…95% noncondensing
Vibration	IEC60068-2-6 (Test Fc, Operating): 5 g @ 10…500 Hz
Shock, operating	EC 60068-2-27 (Test Ea, Unpackaged Shock): 30 g
Shock, nonoperating	EC 60068-2-27 (Test Ea, Unpackaged Shock): 50 g
Emissions	IEC 61000-6-4
ESD immunity	IEC6100-4-2: 6 kV contact discharges 8 kV air discharges
Radiated RF immunity	IEC 61000-4-3: 10V/m with 1 kHz sine-wave 80% AM from 80…2000 MHz 10V/m with 200 Hz 50% Pulse 100% AM @ 900 MHz 10V/m with 200 Hz 50% Pulse 100% AM @ 1890 MHz 3V/m with 1 kHz sine-wave 80% AM from 2000…2700 MHz
EFT/B immunity	IEC 61000-4-4: ±4kV at 5 kHz on signal ports
Surge transient immunity	IEC 61000-4-5: ±2 kV line-earth (CM) on shielded ports
Conducted RF immunity	IEC61000-4-6: 10V rms with 1 kHz sine-wave 80%AM from 150 kHz…80 MHz

Certifications

Certification (when product is marked)[1]	Value
c-UL-us	UL Listed Industrial Control Equipment, certified for US and Canada. See UL File E65584. UL Listed for Class I, Division 2 Group A,B,C,D Hazardous Locations, certified for U.S. and Canada. See UL File E194810.
CE	European Union 2014/30/EU EMC Directive, compliant with: EN 61326-1; Meas./Control/Lab., Industrial Requirements EN 61000-6-2; Industrial Immunity EN 61000-6-4; Industrial Emissions EN 61131-2; Programmable Controllers (Clause 8, Zone A & B). European Union 2011/65/EU RoHS, compliant with: EN 50581; Technical Documentation
RCM	Australian Radiocommunications Act, compliant with: AS/NZS CISPR11; Industrial Emissions.
Ex[2]	European Union 2014/34/EU ATEX Directive, compliant with: EN 60079-0:2012 + A11:2013; General Requirements EN 60079-15:2010; Potentially Explosive Atmospheres, Protection “n” II 3 G Ex nA IIC T4 Gc DEMKO 04 ATEX 0330347X
KC	Korean Registration of Broadcasting and Communications Equipment, compliant with: Article 58-2 of Radio Waves Act, Clause 3
EAC	Russian Customs Union TR CU 020/2011 EMC Technical Regulation

(1) See the Product Certification link at http://www.rockwellautomation.com/global/certification/overview.page for Declaration of Conformity, Certificates, and other certification details.

(2) Applies to all modules except for the 1734-IR2E modules.

Rockwell Automation Support

Rockwell Automation provides technical information on the Web to assist you in using its products. At http://www.rockwellautomation.com/support/, you can find technical manuals, a knowledge base of FAQs, technical and application notes, sample code and links to software service packs, and a MySupport feature that you can customize to make the best use of these tools.

For an additional level of technical phone support for installation, configuration and troubleshooting, we offer TechConnect support programs. For more information, contact your local distributor or Rockwell Automation representative, or visit http://www.rockwellautomation.com/support/.

Installation Assistance

If you experience a problem within the first 24 hours of installation, please review the information that's contained in this manual. You can also contact a special Customer Support number for initial help in getting your product up and running.

United States or Canada	1.440.646.3434
Outside United States or Canada	Use the Worldwide Locator at http://www.rockwellautomation.com/support/americas/phone_en.html, or contact your local Rockwell Automation representative.

New Product Satisfaction Return

Rockwell Automation tests all of its products to ensure that they are fully operational when shipped from the manufacturing facility. However, if your product is not functioning and needs to be returned, follow these procedures.

United States	Contact your distributor. You must provide a Customer Support case number (call the phone number above to obtain one) to your distributor to complete the return process.
Outside United States	Please contact your local Rockwell Automation representative for the return procedure.

Documentation Feedback

Your comments will help us serve your documentation needs better. If you have any suggestions on how to improve this document, complete this form, publication RA-DU002, available at http://www.rockwellautomation.com/literature/.

Rockwell Automation maintains current product environmental information on its website at http://www.rockwellautomation.com/rockwellautomation/about-us/sustainability-ethics/product-environmental-compliance.page.

Allen-Bradley, POINT I/O, Rockwell Automation, Rockwell Software, RSLogix 5000, and TechConnect are trademarks of Rockwell Automation, Inc.
ControlNet, DeviceNet, and EtherNet/IP are trademarks of ODVA, Inc.
Trademarks not belonging to Rockwell Automation are property of their respective companies.

Rockwell Otomasyon Ticaret A.Ş., Kar Plaza İş Merkezi E Blok Kat:6 34752 İçerenköy, İstanbul, Tel: +90 (216) 5698400
www.rockwellautomation.com

Power, Control and Information Solutions Headquarters
Americas: Rockwell Automation, 1201 South Second Street, Milwaukee, WI 53204-2496 USA, Tel: (1) 414.382.2000, Fax: (1) 414.382.4444
Europe/Middle East/Africa: Rockwell Automation NV, Pegasus Park, De Kleetlaan 12a, 1831 Diegem, Belgium, Tel: (32) 2 663 0600, Fax: (32) 2 663 0640
Asia Pacific: Rockwell Automation, Level 14, Core F, Cyberport 3, 100 Cyberport Road, Hong Kong, Tel: (852) 2887 4788, Fax: (852) 2508 1846

Publication 1734-IN011J-EN-E - December 2018
Supersedes Publication 1734-IN011I-EN-E - June 2015
Copyright © 2018 Rockwell Automation, Inc. All rights reserved.