I/O Board Option 20-XCOMM-IO-OPT1

These Installation Instructions are provided with the I/O Board option for use with the External Comms Kit 20-XCOMM-DC-BASE. This document explains how to install the I/O board into the kit, and provides board specifications and I/O wiring details.

This I/O Board option provides additional I/O (6 DC inputs and 2 relay outputs) for the network — not the drive.

Compatability

To use the I/O board, the installed communication adapter must be the following hardware series and firmware revision release or higher:

Communication Adapter	Required Hardware (or higher)	Required Firmware (or higher)
20-COMM-E EtherNet/IP	Series B	v3.001
20-COMM-C ControlNet (coax)	Series B	v2.001
20-COMM-Q ControlNet (fiber)	Series A	v2.001
20-COMM-D DeviceNet	Series B	v2.001

Important: Even though the 20-COMM-B BACnet MS/TP and 20-COMM-M Modbus/TCP adapters can be operated in a 20-XCOMM-DC-BASE Comms Kit, the adapter's limitations cannot support the I/O board option.

Installing the I/O Board

1. Remove J1, 12-position Terminal Block Connector.
2. Insert the black bezel into the base of the light pipe (Figure 1).
3. Carefully align the light pipe assembly over the 8 LED indicators and snap it into the slots on the board.
4. Set JMP 1 Fault Action Jumper for either Fault Configurable (FLT position, pins 1-2) or Hold Last State (HLS position, pins 2-3). See Figure 1 for details.
5. Carefully align the I/O board socket onto the mating plug of the Comm Kit's power supply board while placing the I/O board onto the three standoffs.
6. Fasten the I/O board to the standoffs using the three screws supplied with the I/O board.
7. Reinstall J1, 12-position Terminal Block Connector.
8. Fasten the enclosure cover onto the Comm Kit's base using the two screws in the cover.

Figure 1 Installing the Optional I/O Board

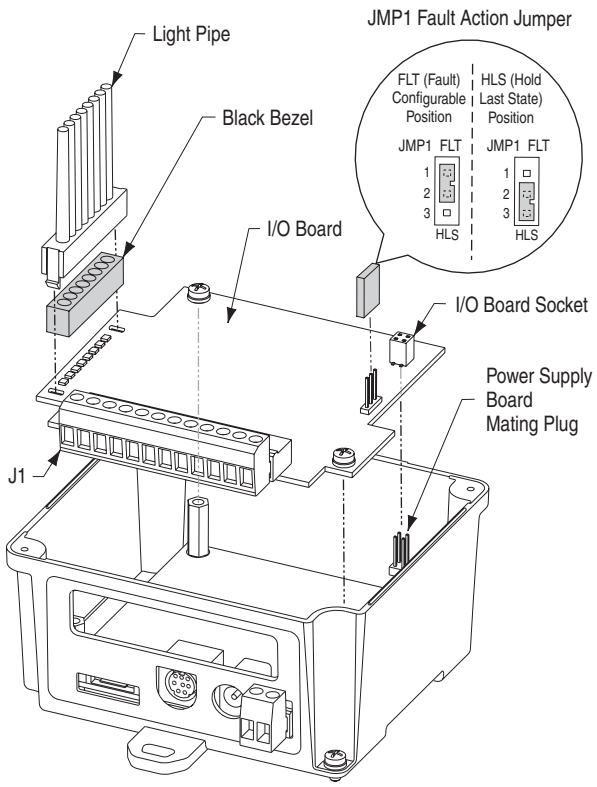

I/O Wiring

Refer to Figure 2 for I/O function descriptions for each terminal point on the I/O connector.

Figure 2 I/O Connector Function Descriptions

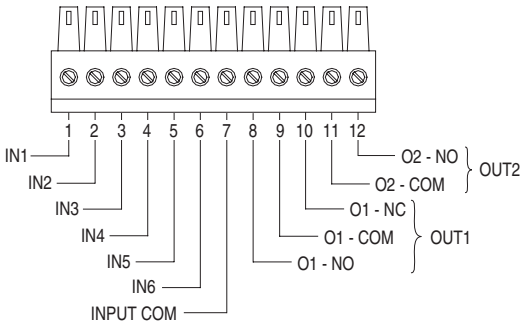

Figure 3 I/O Wiring Example

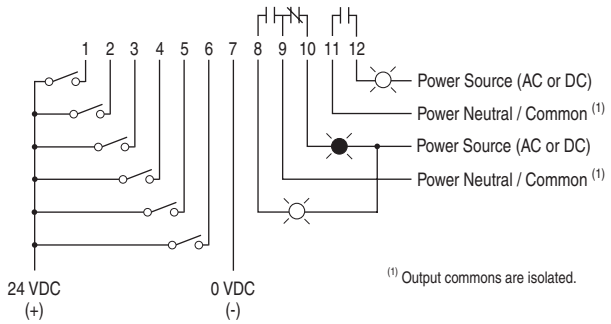

Configuring the 20-COMM-* Adapter for I/O

When the optional I/O board is installed and the Comms Kit is mounted and connected, configure the I/O inputs and outputs. Refer to the communication adapter User Manual for complete details.

I/O Board LED Indicators

LED Name	State	Description
IN1 (Input 1)	Green	Normal operation, Input 1 ON
	Off	Normal operation, Input 1 OFF
	Solid Red	Communication with the 20-COMM-* adapter has not been established. **Possible Reasons:** Wrong adapter/series/ firmware (see table above), or bad connection.
	Flashing Red	**Fault** - 20-COMM-* adapter has experienced an Idle or Comm fault, and the I/O board is taking its configured fault action for the outputs. **Possible Reasons:** Controller in Stop mode or powered down, DPI connector disconnected from drive or drive powered down, or network connector disconnected from 20-COMM-* adapter.
	Orange	OPT1 self-diagnostics failure
IN2 (Input 2) IN3 (Input 3) IN4 (Input 4) IN5 (Input 5) IN6 (Input 6)	Green	Input * ON (1)
	Off	Input * OFF (1)
OUT1 (Output 1) OUT2 (Output 2)	Green	Output * ON
	Off	Output * OFF

(1) These LEDs will indicate input status when the IN1 LED is in normal operation (Green or Off) and communicating with the Comm adapter. If the IN1 LED indicates a problem (Solid Red, Flashing Red or Orange), these LEDs will be turned Off and will not indicate input status.

I/O Board Specifications

Inputs

Number of Inputs	6 (single common)
Input Voltage Type	24 VDC source load
Maximum Input Voltage	27 VDC
Maximum Input Current	8 mA (each input)
Guaranteed ON-State Voltage	10 - 27 VDC (3 mA minimum)
Guaranteed OFF-State Voltage	0 - 5 VDC (2 mA maximum)
Reverse Polarity Protected	-30 VDC
Response Time	25 ms + network update time

The I/O board is NOT designed for fast I/O response times. Do NOT use with input devices that will transition (OFF → ON → OFF) faster than the response time. Potential input devices include auxiliary contact inputs from relays or overloads, pushbuttons, etc.

Outputs

Number of Outputs	2 relay outputs (individually isolated) 1 - Form C contacts 1 - Form A (NO) contact
Maximum Output Contact Voltage	27 VDC / 125 VAC
Maximum Output Contact Current	2A
Expected Contact Life	1,000,000 cycles resistive at < 0.5A 500,000 cycles inductive at < 0.5A 500,000 cycles resistive at 1A 300,000 cycles inductive at 1A 300,000 cycles resistive at 2A 150,000 cycles inductive at 2A
Response Time	25 ms + network update time

The I/O board is NOT designed for fast I/O response times. Do NOT use with output devices that need to transition (OFF → ON → OFF) faster than the response time. Potential output devices include pilot lights or a contact closure reset to another hardware device.

U.S. Allen-Bradley Drives Technical Support - Tel: (1) 262.512.8176, Fax: (1) 262.512.2222, Email: support@drives.ra.rockwell.com, Online: www.ab.com/support/abdrives

www.rockwellautomation.com

Power, Control and Information Solutions Headquarters

Americas: Rockwell Automation, 1201 South Second Street, Milwaukee, WI 53204-2496 USA, Tel: (1) 414.382.2000, Fax: (1) 414.382.4444
Europe/Middle East/Africa: Rockwell Automation, Vorstlaan/Boulevard du Souverain 36, 1170 Brussels, Belgium, Tel: (32) 2 663 0600, Fax: (32) 2 663 0640
Asia Pacific: Rockwell Automation, Level 14, Core F, Cyberport 3, 100 Cyberport Road, Hong Kong, Tel: (852) 2887 4788, Fax: (852) 2508 1846

Publication 20COMM-IN002C-EN-P – May 2007
Supersedes 20COMM-IN002B-EN-P – July 2006

P/N 328356-P03
Copyright © 2007 Rockwell Automation, Inc. All rights reserved. Printed in USA.