Installation Instructions

MicroLogix™ 1762-IQ8 DC Input Module

Inside

Description 3
Installation 4
Mounting 5
System Assembly 7
Field Wiring Connections.....7
I/O Memory Mapping 10
Specifications 11
Hazardous Location Considerations 13
Environnements dangereux.....14

1762-IN004A-US-P

For More Information

For	Refer to this Document	Pub. No.
Information on installing, wiring, and operating a MicroLogix 1200 Programmable Controller	MicroLogix 1200 Programmable Controllers User Manual	1762-UM001A-US-P
Installation guide for the MicroLogix 1200 Programmable Controller.	MicroLogix 1200 Programmable Controllers Installation Instructions	1762-IN006A-ML-P
Installation guide for the MicroLogix 1200 Memory Module and Real Time Clock.	MicroLogix 1200 Memory Module and/or Real Time Clock Installation Instructions	1762-IN001A-US-P
Installation guide for the 1762-IA8 Discrete Input Module	1762-IA8 120V ac Input Module Installation Instructions	1762-IN002A-US-P
Installation guide for the 1762-OW8 Discrete Output Module	1762-OW8 Relay Output Module Installation Instructions	1762-IN003A-US-P
Installation guide for the 1762-IF2OF2 Analog I/O Module	1762-IF2OF2 Analog Input/ Output Module Installation Instructions	1762-IN005A-US-P
More information on proper wiring and grounding techniques.	Industrial Automation Wiring and Grounding Guidelines	1770-4.1

If you would like a manual, you can:

- download a free electronic version from the internet: **`www.ab.com/micrologix`** or **`www.theautomationbookstore.com`**
- purchase a printed manual by:
  - contacting your local distributor or Rockwell Automation representative
  - visiting **`www.theautomationbookstore.com`** and placing your order
  - calling **`1.800.963.9548`** (USA/Canada) or **`001.330.725.1574`** (Outside USA/Canada)

Description

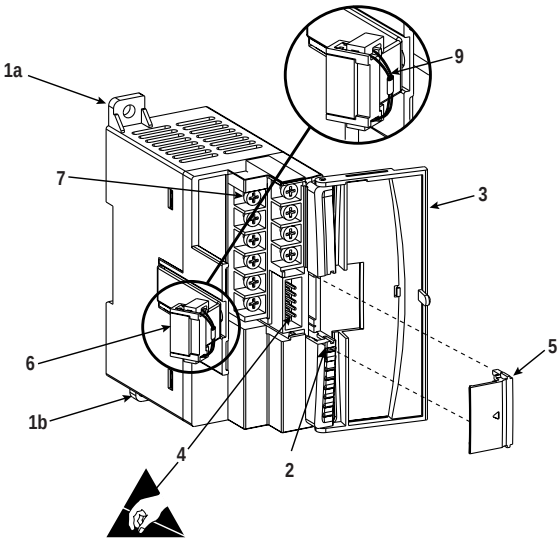

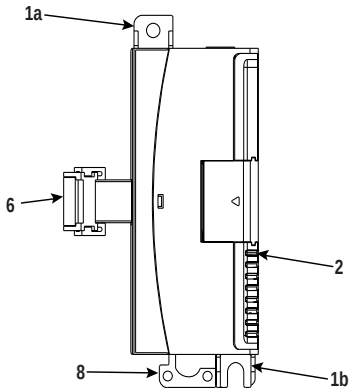

Item	Description
1a	upper panel mounting tab
1b	lower panel mounting tab
2	I/O diagnostic LEDs
3	module door with terminal identification label
4	bus connector with male pins
5	bus connector cover
6	flat ribbon cable with bus connector (female pins)
7	terminal block
8	DIN rail latch
9	pull loop

Installation

1762 I/O is suitable for use in an industrial environment when installed in accordance with these instructions. Specifically, this equipment is intended for use in clean, dry environments (Pollution degree 2[1]) and to circuits not exceeding Over Voltage Category II[2] (IEC 60664-1).[3]

Prevent Electrostatic Discharge

ATTENTION: Electrostatic discharge can damage integrated circuits or semiconductors if you touch bus connector pins. Follow these guidelines when you handle the module:

- Touch a grounded object to discharge static potential.
- Wear an approved wrist-strap grounding device.
- Do not touch the bus connector or connector pins.
- Do not touch circuit components inside the module.
- If available, use a static-safe work station.
- When not in use, keep the module in its static-shield box.

Remove Power

ATTENTION: Remove power before removing or installing this module. When you remove or install a module with power applied, an electrical arc may occur. An electrical arc can cause personal injury or property damage by:

- sending an erroneous signal to your system's field devices, causing unintended machine motion
- causing an explosion in a hazardous environment
- causing permanent damage to the module's circuitry

Electrical arcing causes excessive wear to contacts on both the module and its mating connector. Worn contacts may create electrical resistance.

(1) Pollution Degree 2 is an environment where, normally, only non-conductive pollution occurs except that occasionally a temporary conductivity caused by condensation shall be expected.

(2) Over Voltage Category II is the load level section of the electrical distribution system. At this level transient voltages are controlled and do not exceed the impulse voltage capability of the product's insulation.

(3) Pollution Degree 2 and Over Voltage Category II are International Electrotechnical Commission (IEC) designations.

Mounting

ATTENTION: Do not remove protective debris strip until after the module and all other equipment near the module is mounted and wiring is complete. Once wiring is complete and the module is free of debris, carefully remove protective debris strip. Failure to remove strip before operating can cause overheating.

Minimum Spacing

Maintain spacing from enclosure walls, wireways, adjacent equipment, etc. Allow 50.8 mm (2 in.) of space on all sides for adequate ventilation, as shown:

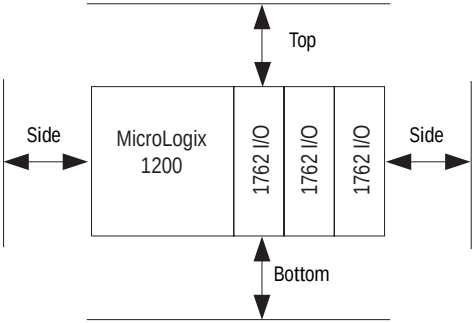

Note: 1762 expansion I/O may be mounted horizontally only.

ATTENTION: During panel or DIN rail mounting of all devices, be sure that all debris (metal chips, wire strands, etc.) is kept from falling into the module. Debris that falls into the module could cause damage when power is applied to the module.

DIN Rail Mounting

The module can be mounted using the following DIN rails: 35 x 7.5 mm (EN 50 022 - 35 x 7.5) or 35 x 15 mm (EN 50 022 - 35 x 15).

Before mounting the module on a DIN rail, close the DIN rail latch. Press the DIN rail mounting area of the module against the DIN rail. The latch will momentarily open and lock into place.

Use DIN rail end anchors (Allen-Bradley part number 1492-EA35 or 1492-EAH35) for vibration or shock environments.

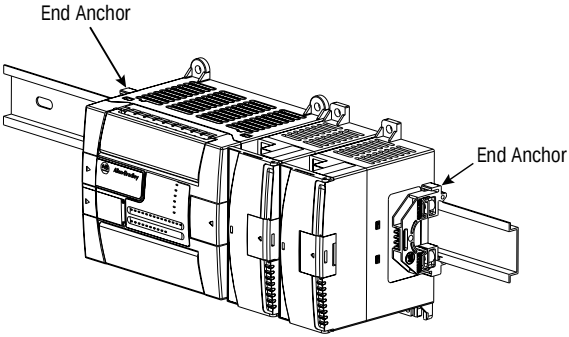

Note: For environments with greater vibration and shock concerns, use the panel mounting method described below, instead of DIN rail mounting.

Panel Mounting

Use the dimensional template shown below to mount the module. The preferred mounting method is to use two M4 or #8 panhead screws per module. M3.5 or #6 panhead screws may also be used, but a washer may be needed to ensure a good ground contact. Mounting screws are required on every module.

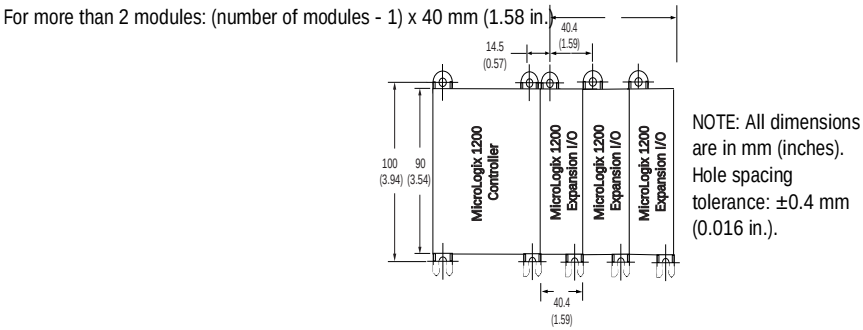

System Assembly

The expansion I/O module is attached to the controller or another I/O module by means of a flat ribbon cable *after* mounting as shown below.

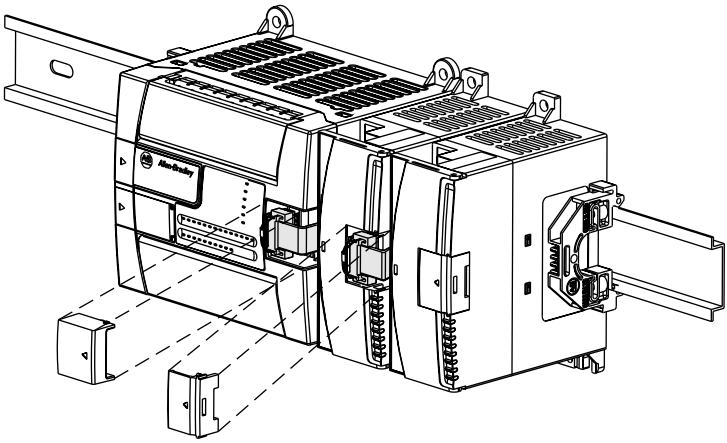

Note: Use the pull loop on the connector to disconnect modules. Do not pull on the ribbon cable.

ATTENTION: EXPLOSION HAZARD

- In Class I, Division 2 applications, the bus connector must be fully seated and the bus connector cover must be snapped in place.
- In Class I, Division 2 applications, all modules must be mounted in direct contact with each other as shown on page 6. If DIN rail mounting is used, an end stop must be installed ahead of the controller and after the last 1762 I/O module.

Field Wiring Connections

Grounding the Module

This product is intended to be mounted to a well-grounded mounting surface such as a metal panel. Additional grounding connections from the module's mounting tabs or DIN rail (if used) are not required unless the mounting surface cannot be grounded. Refer to *Industrial Automation Wiring and Grounding Guidelines*, Allen-Bradley publication 1770-4.1, for additional information.

Input Wiring

Basic wiring[1] of input devices to the 1762-IQ8 is shown below.

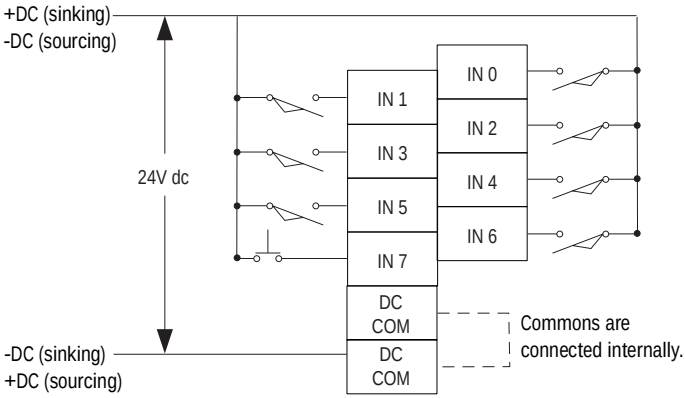

A write-on label is provided with the module. Mark the identification of each terminal with permanent ink, and slide the label back into the door.

ATTENTION: Be careful when stripping wires. Wire fragments that fall into a module could cause damage when power is applied. Once wiring is complete, ensure the module is free of all metal fragments.

ATTENTION: Miswiring of the module to an AC power source will damage the module.

(1) Sinking/Sourcing Inputs - Sourcing/sinking describes the current flow between the I/O module and the field device. Sourcing I/O circuits supply (source) current to sinking field devices. Sinking I/O circuits are driven by a current sourcing field device. Field devices connected to the negative side (DC Common) of the field power supply are sinking field devices. Field devices connected to the positive side (+V) of the field supply are sourcing field devices.

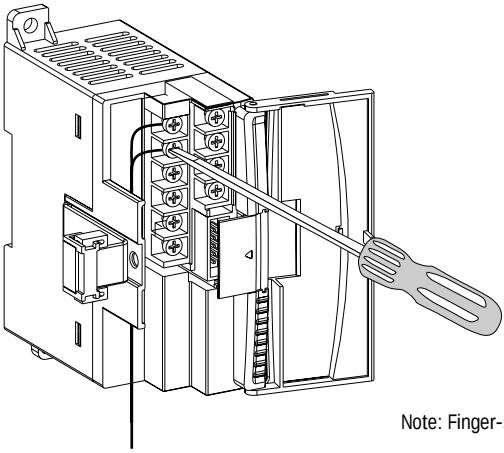

Note: Finger-safe cover not shown.

Wiring the Finger-Safe Terminal Block

When wiring the terminal block, keep the finger-safe cover in place.

1. Route the wire under the terminal pressure plate. You can use the stripped end of the wire or a spade lug. The terminals will accept a 6.35 mm (0.25 in.) spade lug.
2. Tighten the terminal screw making sure the pressure plate secures the wire. Recommended torque when tightening terminal screws is 0.904 Nm (8 in-lbs).

Note: If you need to remove the finger-safe cover, insert a screw driver into one of the square wiring holes and gently pry the cover off. If you wire the terminal block with the finger-safe cover removed, you will not be able to put it back on the terminal block because the wires will be in the way.

Wire Size and Terminal Screw Torque

Each terminal accepts up to two wires with the following restrictions:

Wire Type		Wire Size	Terminal Screw Torque
Solid	Cu-90°C (194°F)	#14 to #22 AWG	0.904 Nm (8 in-lbs)
Stranded	Cu-90°C (194°F)	#16 to #22 AWG	0.904 Nm (8 in-lbs)

I/O Memory Mapping

Input Data File

For each input module, the input data file contains the current state of the field input points. Bit positions 0 through 7 correspond to input terminals 0 through 7.

Word	Bit Position															
	15	14	13	12	11	10	9	8	7	6	5	4	3	2	1	0
0	0	0	0	0	0	0	0	0	r	r	r	r	r	r	r	r

r = read only, 0 = always at a 0 or OFF state

Addressing

The addressing scheme for 1762 Expansion I/O is shown below.

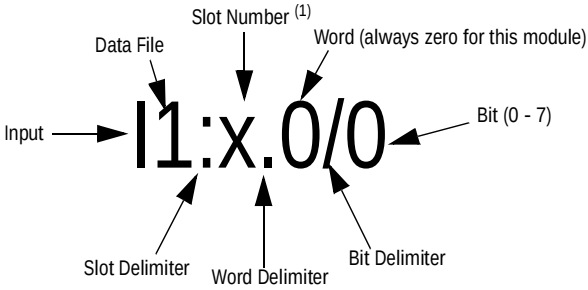

(1) I/O located on the controller (embedded I/O) is slot 0. I/O added to the controller (expansion I/O) begins with slot 1.

Specifications

General Specifications

Specification	Value
Dimensions	90 mm (height) x 87 mm (depth) x 40 mm (width) height including mounting tabs is 110 mm 3.543 in. (height) x 3.425 in. (depth) x 1.575 in. (width) height including mounting tabs is 4.33 in.
Approximate Shipping Weight (with carton)	200 g (0.44 lbs.)
Storage Temperature	-40°C to +85°C (-40°F to +185°F)
Operating Temperature	0°C to +55°C (-32°F to +131°F)
Operating Humidity	5% to 95% non-condensing
Operating Altitude	2000 meters (6561 feet)
Vibration	Operating: 10 to 500 Hz, 5G, 0.030 in. max. peak-to-peak
Shock	Operating: 30G panel mounted
Agency Certification	C-UL certified (under CSA C22.2 No. 142) UL 508 listed CE compliant for all applicable directives
Hazardous Environment Class	Class I, Division 2, Hazardous Location, Groups A, B, C, D (UL 1604, C-UL under CSA C22.2 No. 213)
Noise Immunity	NEMA standard ICS 2-230
Radiated and Conducted Emissions	EN50081-2 Class A
Electrical /EMC:	*The module has passed testing at the following levels:*
ESD Immunity (IEC1000-4-2)	4 kV contact, 8 kV air, 4 kV indirect
Radiated Immunity (IEC1000-4-3)	10 V/m, 80 to 1000 MHz, 80% amplitude modulation, +900 MHz keyed carrier
Fast Transient Burst (IEC1000-4-4)	2 kV, 5 kHz
Surge Immunity (IEC1000-4-5)	2 kV common mode, 1 kV differential mode
Conducted Immunity (IEC1000-4-6)	10V, 0.15 to 80 MHz[1]

(1) Conducted Immunity frequency range may be 150 kHz to 30 MHz if the Radiated Immunity frequency range is 30 MHz to 1000 MHz.

Input Specifications

Specification	1762-IQ8
Voltage Category	24V dc (sink/source)[1]
Operating Voltage Range	10 to 30V dc at 30°C (86°F) 10 to 26.4V dc at 55°C (131°F)
Number of Inputs	8
Bus Current Draw (max.)	50 mA at 5V dc (0.25W)
Heat Dissipation (max.)	3.7 Total Watts
Signal Delay (max.)	On Delay: 8.0 ms Off Delay: 8.0 ms
Off-State Voltage (max.)	5V dc
Off-State Current (max.)	1.5 mA
On-State Voltage (min.)	10V dc
On-State Current	2.0 mA min. at 10V dc 8.0 mA nominal at 24V dc 12.0 mA max. at 30V dc
Inrush Current (max.)	250 mA
Nominal Impedance	3K Ω
IEC Input Compatibility	Type 1+
Power Supply Distance Rating	6
Isolated Groups	Group 1: inputs 0 to 7 (internally connected commons)
Input Group to Backplane Isolation	Verified by one of the following dielectric tests: 1200V ac for 1 sec. or 1697V dc for 1 sec. 75V dc working voltage (IEC Class 2 reinforced insulation)
Vendor I.D. Code	1
Product Type Code	7
Product Code	96

(1) Sinking/Sourcing Inputs - Sourcing/sinking describes the current flow between the I/O module and the field device. Sourcing I/O circuits supply (source) current to sinking field devices. Sinking I/O circuits are driven by a current sourcing field device. Field devices connected to the negative side (DC Common) of the field power supply are sinking field devices. Field devices connected to the positive side (+V) of the field supply are sourcing field devices.

Hazardous Location Considerations

This equipment is suitable for use in Class I, Division 2, Groups A, B, C, D or non-hazardous locations only. The following ATTENTION statement applies to use in hazardous locations.

ATTENTION: EXPLOSION HAZARD

- Substitution of components may impair suitability for Class I, Division 2.
- Do not replace components or disconnect equipment unless power has been switched off.
- Do not connect or disconnect components unless power has been switched off.
- This product must be installed in an enclosure.
- In Class I, Division 2 applications, the bus connector must be fully seated and the bus connector cover must be snapped in place.
- In Class I, Division 2 applications, all modules must be mounted in direct contact with each other as shown on page 6. If DIN rail mounting is used, an end stop must be installed ahead of the controller and after the last 1762 I/O module.

Environnements dangereux

Cet équipement est conçu pour être utilisé dans des environnements de Classe I, Division 2, Groupes A, B, C, D ou non dangereux. La mise en garde suivante s'applique à une utilisation dans des environnements dangereux.

ATTENTION: DANGER D'EXPLOSION

- La substitution de composants peut rendre cet équipement impropre à une utilisation en environnement de Classe I, Division 2.
- Ne pas remplacer de composants ou déconnecter l'équipement sans s'être assuré que l'alimentation est coupée.
- Ne pas connecter ou déconnecter des composants sans s'être assuré que l'alimentation est coupée.
- Ce produit doit être installé dans une armoire.
- Pour les applications de Classe I, Division 2, le connecteur de bus doit être correctement installé et son couvercle enclenché.
- Pour les applications de Classe I, Division 2, tous les modules doivent être installés en contact direct les uns avec les autres, comme indiqué page 6. Si on utilise le montage sur rail DIN, une butée doit être placée à l'avant de l'automate et après la dernière unité d'E/S 1762.

MicroLogix is a trademark of Rockwell Automation.

Reach us now at www.rockwellautomation.com

Wherever you need us, Rockwell Automation brings together leading brands in industrial automation including Allen-Bradley controls, Reliance Electric power transmission products, Dodge mechanical power transmission components, and Rockwell Software. Rockwell Automation's unique, flexible approach to helping customers achieve a competitive advantage is supported by thousands of authorized partners, distributors and system integrators around the world.

Americas Headquarters, 1201 South Second Street, Milwaukee, WI 53204, USA, Tel: (1) 414 382-2000, Fax: (1) 414 382-4444
European Headquarters SA/NV, avenue Herrmann Debroux, 46, 1160 Brussels, Belgium, Tel: (32) 2 663 06 00, Fax: (32) 2 663 06 40
Asia Pacific Headquarters, 27/F Citicorp Centre, 18 Whitfield Road, Causeway Bay, Hong Kong, Tel: (852) 2887 4788, Fax: (852) 2508 1846

Rockwell Automation

Publication 1762-IN004A-US-P September 1999

PN 40071-071-01(A)

© (1999) Rockwell International Corporation. Printed in the U.S.A.