Installation Instructions

Allen-Bradley

GuardPLC Relay Output Module

Catalog Number 1753-OW8

Topic	Page
Important User Information	2
About the 1753-OW8 Relay Output Module	3
General Safety	3
Install the Module	4
Mount the Module	5
Ground the Module	6
Wire the Module	6
Make Safety-related Communication Connections	8
Reset Push Button	9
Status Indicators	10
Specifications	11
Additional Resources	15

Allen-Bradley • Rockwell Software

Rockwell Automation

Important User Information

Solid-state equipment has operational characteristics differing from those of electromechanical equipment. Safety Guidelines for the Application, Installation and Maintenance of Solid State Controls (Publication SGI-1.1 available from your local Rockwell Automation sales office or online at http://www.rockwellautomation.com/literature/) describes some important differences between solid-state equipment and hard-wired electromechanical devices. Because of this difference, and also because of the wide variety of uses for solid-state equipment, all persons responsible for applying this equipment must satisfy themselves that each intended application of this equipment is acceptable.

In no event will Rockwell Automation, Inc. be responsible or liable for indirect or consequential damages resulting from the use or application of this equipment.

The examples and diagrams in this manual are included solely for illustrative purposes. Because of the many variables and requirements associated with any particular installation, Rockwell Automation, Inc. cannot assume responsibility or liability for actual use based on the examples and diagrams.

No patent liability is assumed by Rockwell Automation, Inc. with respect to use of information, circuits, equipment, or software described in this manual.

Reproduction of the contents of this manual, in whole or in part, without written permission of Rockwell Automation, Inc., is prohibited.

Throughout this manual, when necessary, we use notes to make you aware of safety considerations.

	WARNING: Identifies information about practices or circumstances that can cause an explosion in a hazardous environment, which may lead to personal injury or death, property damage, or economic loss.
	ATTENTION: Identifies information about practices or circumstances that can lead to personal injury or death, property damage, or economic loss. Attentions help you identify a hazard, avoid a hazard and recognize the consequences.
	SHOCK HAZARD: Labels may be on or inside the equipment, for example, drive or motor, to alert people that dangerous voltage may be present.
	BURN HAZARD: Labels may be on or inside the equipment, for example, drive or motor, to alert people that surfaces may reach dangerous temperatures.
IMPORTANT	Identifies information that is critical for successful application and understanding of the product.

About the 1753-OW8 Relay Output Module

The 1753-OW8 relay output module is a distributed I/O module for use with GuardPLC controllers. The module features eight relay outputs as shown below.

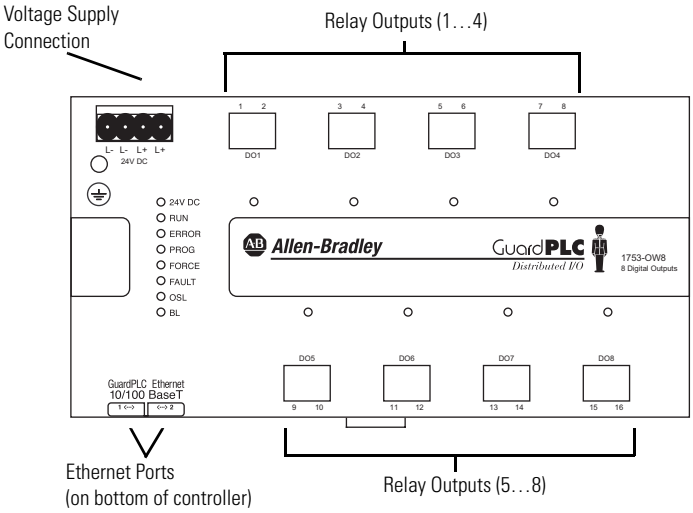

General Safety

ATTENTION: Personnel responsible for the application of safety-related programmable electronic systems (PES) shall be aware of the safety requirements in the application of the system and shall be trained in using the system.

Prevent Electrostatic Discharge

ATTENTION: This equipment is sensitive to electrostatic discharge, which can cause internal damage and affect normal operation. Follow these guidelines when you handle this equipment:

- Touch a grounded object to discharge static potential.
- Wear an approved wrist-strap grounding device.
- Do not touch connectors or pins on component boards.
- Do not touch circuit components inside the equipment.
- Use a static-safe workstation, if available.
- Store the equipment in appropriate static-safe packaging when not in use.

Environment and Enclosure

ATTENTION: This equipment is intended for use in a Pollution Degree 2 industrial environment, in overvoltage Category II applications (as defined in IEC publication 60664-1), at altitudes up to 2000 m (6562 ft) without derating.

This equipment is considered Group 1, Class A industrial equipment according to IEC/CISPR 11. Without appropriate precautions, there may be difficulties with electromagnetic compatibility in residential and other environments due to conducted as well as radiated disturbances.

This equipment is supplied as open-type equipment. It must be mounted within an enclosure that is suitably designed for those specific environmental conditions that will be present and appropriately designed to prevent personal injury resulting from accessibility to live parts. The enclosure must have suitable flame-retardant properties to prevent or minimize the spread of flame, complying with a flame spread rating of 5VA, V2, V1, V0 (or equivalent) if non-metallic. The interior of the enclosure must be accessible only by the use of a tool. Subsequent sections of this publication may contain additional information regarding specific enclosure type ratings that are required to comply with certain product safety certifications.

In addition to this publication, see:

- Industrial Automation Wiring and Grounding Guidelines, Rockwell Automation publication 1770-4.1, for additional installation requirements.
- NEMA 250 and IEC 60529, as applicable, for explanations of the degrees of protection provided by different types of enclosure.

Install the Module

Follow these steps to install the 1753-OW8 module.

1. Mount the module to a DIN rail.
2. Ground the module.
3. Wire the module.
4. Make communication connections.

This publication describes these steps in detail.

Mount the Module

IMPORTANT For effective cooling, mount the module following these guidelines.

- Mount the module horizontally.
- Provide a gap of at least 100 mm (3.94 in.) above and below the module.
- Select a location where air flows freely or use an additional fan.
- Do not mount the module over a heating device.

The terminal connections meet the protection requirements according to IP20. For higher requirements, the 1753-OW8 must be mounted in an enclosure. The clearance and creepage distances are designed for overvoltage category 2 up to 300 V according to IEC 61131-2.

The module cannot be panel-mounted. Mount the module to a DIN rail by following these steps.

1. Hook the top slot over the DIN rail.
2. Insert a flathead screwdriver into the gap between the housing and the latch and pull the latch downward.
3. Hold the latch down as you push the housing back onto the DIN rail.
4. Release the latch to lock the device onto the rail.

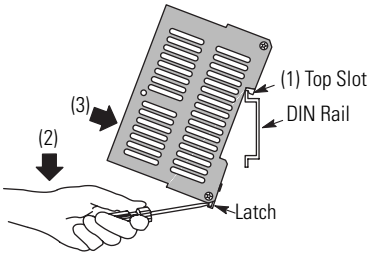

TIP To remove the module from the DIN rail, insert a flathead screwdriver into the gap between the housing and the latch and pull the latch downward as you lift the module off of the rail.

IP Address Label

Use the transparent label shipped with the module to note the IP Address and System ID (SRS).

IMPORTANT If you attach the label to the module, make sure you do not cover any of the ventilation slots.

Ground the Module

The module is functionally grounded through its DIN rail connection. A protective earth ground connection is required and is provided through a separate grounding screw on the upper left of the housing and marked with the grounding symbol ⏚.

You must also provide an acceptable grounding path for each device in your application. For more information on proper grounding guidelines, refer to the Industrial Automation Wiring and Grounding Guidelines, publication 1770-4.1.

ATTENTION: This product is grounded through the DIN rail to chassis ground. Use zinc-plated yellow-chromate steel DIN rail to assure proper grounding. The use of other DIN rail materials (for example, aluminum or plastic) that can corrode, oxidize, or are poor conductors, can result in improper or intermittent grounding. Secure DIN rail to mounting surface approximately every 200 mm (7.8 in.) and use end-anchors appropriately.

Wire the Module

The following sections describe how to connect the voltage supply and connect the relay outputs.

Connect the Voltage Supply

To comply with CE Low Voltage Directives (LVD) and UL restrictions, you must use either a Safety Extra Low Voltage (SELV), or a Protected Extra Low Voltage (PELV) power supply to power this adapter. A SELV supply cannot exceed 30V rms, 42.4V peak, or 60V DC under normal conditions and under single-fault conditions. A PELV supply has the same rating and is connected to protected earth.

IMPORTANT Protect the module with a 10 A slow-blow fuse.

The supply voltage is connected via a 4-pin connector that accommodates wire sizes up to 2.5 mm^2 (14 AWG). You need to connect only one wire to L+ and one wire to L-. Both L+ and L- terminals are internally connected, so you can daisy-chain 24V DC power from the module to other devices in the panel by using the remaining terminal.

ATTENTION: Do not reverse the L+ and L- terminals or damage to the module will result. There is no reverse polarity protection.

Connect Safety-related Relay Outputs

The module has eight relay outputs whose status is indicated via status indicators.

An output is in a safety state when it is de-energized. When an internal (non-communication) fault occurs, all outputs are switched off.

Each output of the module is fitted with two safety relays with positively guided contacts and one MSR-type relay.

Relay outputs are connected to these terminals. See the wire size and terminal torque specifications on page 11.

Terminal Number	Designation	Relay Output
1	DO1	Contact 1, terminal A
2		Contact 1, terminal B
3	DO2	Contact 2, terminal A
4		Contact 2, terminal B
5	DO3	Contact 3, terminal A
6		Contact 3, terminal B
7	DO4	Contact 4, terminal A
8		Contact 4, terminal B
9	DO5	Contact 5, terminal A
10		Contact 5, terminal B
11	DO6	Contact 6, terminal A
12		Contact 6, terminal B
13	DO7	Contact 7, terminal A
14		Contact 7, terminal B
15	DO8	Contact 8, terminal A
16		Contact 8, terminal B

The output contacts are connected in pairs via terminal connectors (numbered terminals). The terminal pins on the front plate of the module have the same numbering sequence to help prevent miswiring.

For the connection of higher voltages (110/220V AC) besides SELV or PELV, suitable cables must be used with double or reinforced insulation.

Internal non-replaceable fuses are used to limit the switching current of the relay contact circuits to 60% of the maximum admissible AC switching current. For DC switching, the relay contact circuits must be additionally equipped with an external fuse rated no higher than the maximum admissible DC switching capacity.

Errors in one or more channels are indicated by the FAULT status indicator. In addition, the system status can be evaluated in the user program.

If the 1753-OW8 module faults, all eight outputs are switched off. This is indicated by the Fault status indicator.

TIP For more information on output wiring, see the GuardPLC System User Manual, publication 1753-UM001.

Output Connection Example

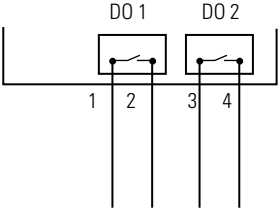

Make Safety-related Communication Connections

The module has two 10/100BaseT, RJ45 connectors on the bottom side of the unit to provide communication to the GuardPLC controller via GuardPLC Ethernet protocol. Because this is an Ethernet switch, you can daisy-chain connections from the GuardPLC controller to other distributed I/O modules. The switch is auto-detect. Use either crossover or straight-through shielded Ethernet cabling.

Star or line configurations are available. Make sure that a network loop is not generated. Data packets must be able to reach a node only via a single path. Ring topology is not supported.

IMPORTANT In the event of a communication fault between the GuardPLC controller and the 1753-OW8 module, the relay outputs will be set to their initial value. The initial value is configured during signal creation in the hardware management window of RSLogix Guard PLUS! software.

TIP The media access control (MAC) address of the module is printed on the label positioned over both lower RJ45 connections.

Reset Push Button

The module is equipped with a reset pushbutton. Reset via the push button is necessary under the following conditions.

- You forget the password to go online via the programming software.
- You are unable to determine the IP address and SRS of the controller.

The push button is accessible through a small round hole at the top of the housing, approximately 4...5 cm (1.6 ...2.0 in.) from the left rim and recessed approximately 9.5 mm (0.375 in.).

IMPORTANT Activate the reset push button using an insulated pin to prevent short-circuits.

To reset, press and hold the push button for 20 seconds while rebooting the device by cycling power. Pressing the Reset push button during operation has no affect.

With activation of the reset button:

- all accounts are deleted except for the default account.
- IP Address and System ID (SRS) are set to their default values.

The next time you cycle power, these settings will be restored to the last values stored into nonvolatile memory. This means that either the settings prior to the reset will be restored, or if any settings were changed after the reset, those new settings will still be in effect.

Status Indicators

Indicator	Status	Description
24V DC	On	24V DC operating voltage present.
	Off	No operating voltage.
RUN	On	This is the normal status of the module. A routine, which has been loaded into the module, is executed. The module processes input and output signals, carries out communication, and performs hardware and software tests.
	Flashing	The module is in STOP mode and is not executing a routine. All system outputs are reset. STOP mode can be triggered by setting the *Emergency stop* system variable to TRUE in the routine, or by direct command from the programming software.
	Off	The module is in ERROR_STOP (see ERROR).
ERROR	On	• A hardware error has been detected by the module. The module goes to ERROR_STOP and the execution of the routine is halted. Hardware errors are errors in the module, errors in one or more of the digital input and output modules, or errors in the counters. • A software error in the operating system has been detected by the module. • The watchdog has reported an error due to exceeded cycle time. All system outputs are reset and the module ceases all hardware and software tests. The module can only be restarted by a command from the programming software.
	Off	No errors are detected.
PROGress	On	The upload of a new module configuration is in progress.
	Flashing	The upload of a new operating system into the nonvolatile ROM is in progress.
	Off	No upload of module configuration or operating system in progress.
FORCE	On	The module is executing a routine (RUN) and FORCE mode is activated by the user.
	Flashing	The module is in STOP, but Forcing has been initiated and will be activated when the module is started.
	Off	Forcing is OFF.
FAULT	On	• The routine (logic) has caused an error. • The module configuration is faulty. • The upload of a new operating system was not successful and the operating system is corrupted.
	Flashing	An error has occurred during a nonvolatile ROM write cycle. One or more I/O errors have occurred.
	Off	None of the above errors has occurred.
OSL	Flashing	Emergency **O**perating **S**ystem **L**oader is active.
BL	Flashing	**B**oot **L**oader unable to load operating system or unable to start COMM operating system loader.
Module status can be interrogated through the programming software. For more information, refer to the GuardPLC System User Manual, publication 1753-UM001.		

Specifications

Technical Specifications - 1753-OW8

Attribute	1753-OW8
Interface: GuardPLC Ethernet	2 x RJ45, 10/100BaseT (with 100 Mbps) with integrated switch
Operating voltage	24V DC, -15…20%, w_{ss} ≤ 15%
Current consumption	0.6 A max (with max load)
Isolation voltage	• 250V (continuous), reinforced insulation type, relay contacts to Ethernet, relay contacts to DC power, and relay to relay • 50V (continuous), reinforced insulation type, Ethernet to DC power • Type-tested at 3250V DC for 60 s, relay contacts to Ethernet, relay contacts to DC power, and relay to relay • Type-tested at 1000V DC for 60 s, Ethernet to DC power
Response time	≥ 10 ms
Wiring category(1)	Category 2 on communication ports, signal ports, and power ports
Wire size	• I/O – 0.13…1.3 mm^2 (26…16 AWG) solid or stranded copper wire rated at 75 °C (167 °F) or greater with 1.2 mm (3/64 in.) insulation max • Power – 0.33…2.1 mm^2 (22…14 AWG) solid or stranded copper wire rated at 75 °C (167 °F) or greater with 1.2 mm (3/64 in.) insulation max • Ethernet – RJ45 connector according to IEC 60603-7, 2 or 4 pair Category 5e minimum cable according to TIA 568-B.1, or Category 5 cable according to ISO/IEC 24702
Wire type	Shielded on Ethernet
Terminal block torque	0.51 N•m (4.5 lb•in)
Fuse (external)	24V DC power: 10 A (time-lag)
Battery backup	None
Enclosure type rating	Meets IP20
Width, approx.	207 mm (8.14 in.) including housing screws
Height, approx.	114 mm (4.49 in.) including latch
Depth, approx.	86 mm (3.38 in.) including grounding bolt
Weight, approx.	1.3 kg (3.47 lb)

Technical Specifications - 1753-OW8

Relay Outputs	
Number of outputs	8 normally open contacts
Switching voltage	≥ 5V, ≤ 250V AC/250V DC
Switching current	UL: ● 24V DC @ 1 A noninductive, external fusing adapted ● 250V AC @ 6 A general purpose
	TÜV: ● 30V DC, 90 W (3.15 A) max, noninductive, external fusing adapted ● 70V DC, 22 W (0.315 A) max, noninductive, external fusing adapted ● 127V DC, 25 W (0.25 A) max, noninductive, external fusing adapted ● 250V DC, 40 W (0.16 A) max, noninductive, external fusing adapted ● 250V AC, 250 VA, cos $\varphi \geq 0.5$ max ● 250V AC, 625 VA, cos $\varphi \geq 1.0$ max
Turn-on time	approx. 30 ms
Turn-off time	approx. 10 ms
Bounce time	approx. 15 ms
Service life, mechanical	$\geq 10^6$ switching cycles
Service life, electrical	$\geq 2.5 \times 10^5$ switching cycles with resisitive full load and ≤0.1 switching cycles per second

(1) Use this Conductor Category information for planning conductor routing. Refer to Industrial Automation Wiring and Grounding Guidelines, publication 1770-4.1.

Environmental Specifications - 1753-OW8

Attribute	1753-OW8
Temperature, nonoperating • IEC 60068-2-1 (Test Ab, Unpackaged nonoperating cold) • IEC 60068-2-2 (Test Bb, Unpackaged nonoperating dry heat) • IEC 60068-2-14 (Test Na, Unpackaged nonoperating thermal shock)	-40…85 °C (-40…185 °F)
Temperature, operating • IEC 60068-2-1 (Test Ad, operating cold) • IEC 60068-2-2 (Test Bd, operating dry heat) • IEC 60068-2-14 (Test Nb, operating thermal shock)	0…60 °C (32…140 °F)
Temperature, surrounding air	60 °C (140 °F)
Vibration • IEC 60068-2-6 (Test Fc, operating)	1 g @ 10…150 Hz
Shock, operating • IEC 60068-2-27 (Test Ea, unpackaged shock)	15 g
Relative humidity • IEC 60068-2-30 (Test Db, unpackaged damp heat)	10…95% noncondensing
Emissions	CISPR 11: Group 1, Class A
ESD Immunity • IEC 61000-4-2	• 6 kV contact discharges • 8 kV air discharges
Radiated RF Immunity • IEC 61000-4-3	• 10V/m with 1kHz sine-wave 80% AM from 80 MHz…2000 MHz • 1 V/m with 1 kHz sine-wave 80% AM from 2000…2700 MHz
EFT/B Immunity • IEC 61000-4-4	• ±2 kV @ 5 kHz on DC power ports • ±1 kV @ 5 kHz on signal ports • ±1 kV @ 5 kHz on communication ports
Surge Transient Immunity • IEC 61000-4-5	• ±500V line-line (DM) and ±500V line-earth (CM) on DC power ports • ±1 kV line-earth (CM) on signal ports • ±1 kV line-earth (CM) on communication ports
Conducted RF Immunity • IEC 61000-4-6	10V rms with 1 kHz sine-wave 80% AM from 150 kHz…80 MHz
Damped Oscillatory Wave Immunity • IEC 61000-4-12	• ±1 kV line-earth (CM) on signal ports • ±1 kV line-earth (CM) on power ports

Certifications

Certification (when product is marked)(1)	1753-OW8
c-UL-us	UL Listed Industrial Control Equipment, certified for US and Canada. See UL File E65584
CE	European Union 2004/108/EC EMC Directive, compliant with: ● EN 61326-1 Meas./Control/Lab., Industrial Requirements ● EN 61000-6.2; Industrial Immunity ● EN 61000-6-4; Industrial Emissions ● EN 61131-2; Programmable Controllers (Clause 8, Zone A & B) European Union 2006/95/EC LVD Directive, compliant with: ● EN 61131-2; Programmable Controllers (Clause 11)
C-Tick	Australian Radiocommunications Act, compliant with: AS/NZS CISPR 11; Industrial Emissions
Functional Safety	Certified by TÜV(2): up to and including SIL 3 according to IEC 61508 and PLe (Cat. 4) according to ISO 13849-1

(1) See the Product Certification link at http://www.ab.com for Declarations of Conformity, Certificates, and other certification details.

(2) When used with specified firmware revisions.

Additional Resources

The table below provides a listing of publications that contain important information about GuardPLC systems.

Resource	Description
GuardPLC Controller Systems Safety Reference Manual, publication 1753-RM002	Detailed information regarding the safety certification of the GuardPLC System
GuardPLC Controller Systems User Manual, publication 1753-UM001	Detailed information on installing, wiring, configuring, operating, maintaining, and troubleshooting GuardPLC systems
Using RSLogix Guard PLUS! Software with GuardPLC Controllers Programming Manual, publication 1753-PM001	Detailed information on programming your GuardPLC system using RSLogix Guard PLUS! software
GuardPLC 1600 Controller Installation Instructions, publication 1753-IN001	Information on installing GuardPLC 1600 controllers
GuardPLC 1800 Controller Installation Instructions, publication 1753-IN002	Information on installing GuardPLC 1800 controllers
Industrial Automation Wiring and Grounding Guidelines, publication 1770-4.1	General guidelines for installing a Rockwell Automation industrial system

You can view or download publications at http://www.rockwellautomation.com/literature. To order paper copies of technical documentation, contact your local Rockwell Automation distributor or sales representative.

Rockwell Automation Support

Rockwell Automation provides technical information on the Web to assist you in using its products. At http://www.rockwellautomation.com/support/, you can find technical manuals, a knowledge base of FAQs, technical and application notes, sample code and links to software service packs, and a MySupport feature that you can customize to make the best use of these tools.

For an additional level of technical phone support for installation, configuration and troubleshooting, we offer TechConnect support programs. For more information, contact your local distributor or Rockwell Automation representative, or visit http://www.rockwellautomation.com/support/.

Installation Assistance

If you experience a problem within the first 24 hours of installation, please review the information that's contained in this manual. You can also contact a special Customer Support number for initial help in getting your product up and running.

United States or Canada	1.440.646.3434
Outside United States or Canada	Use the Worldwide Locator at http://www.rockwellautomation.com/support/americas/phone_en.html, or contact your local Rockwell Automation representative.

New Product Satisfaction Return

Rockwell Automation tests all of its products to ensure that they are fully operational when shipped from the manufacturing facility. However, if your product is not functioning and needs to be returned, follow these procedures.

United States	Contact your distributor. You must provide a Customer Support case number (call the phone number above to obtain one) to your distributor to complete the return process.
Outside United States	Please contact your local Rockwell Automation representative for the return procedure.

Documentation Feedback

Your comments will help us serve your documentation needs better. If you have any suggestions on how to improve this document, complete this form, publication RA-DU002, available at http://www.rockwellautomation.com/literature.

Allen-Bradley, Rockwell Software, Rockwell Automation, and GuardPLC are trademarks of Rockwell Automation, Inc.

Trademarks not belonging to Rockwell Automation are property of their respective companies.

Rockwell Otomasyon Ticaret A.Ş., Kar Plaza İş Merkezi E Blok Kat:6 34752 İçerenköy, İstanbul, Tel: +90 (216) 5698400

www.rockwellautomation.com

Power, Control and Information Solutions Headquarters

Americas: Rockwell Automation, 1201 South Second Street, Milwaukee, WI 53204 USA, Tel: (1) 414.382.2000, Fax: (1) 414.382.4444
Europe/Middle East/Africa: Rockwell Automation, Vorstlaan/Boulevard du Souverain 36, 1170 Brussels, Belgium, Tel: (32) 2 663 0600, Fax: (32) 2 663 0640
Asia Pacific: Rockwell Automation, Level 14, Core F, Cyberport 3, 100 Cyberport Road, Hong Kong, Tel: (852) 2887 4788, Fax: (852) 2508 1846

Rockwell Automation Publication 1753-IN012C-EN-P - June 2010 PN-77081

Supersedes Publication 1753-IN012B-EN-P - October 2005

Copyright © 2010 Rockwell Automation, Inc. All rights reserved. Printed in the U.S.A.