Installation Instructions

Original Instructions

Kinetix 5700 DC-bus Conditioner Module

Catalog Number 2198-DCBUSCOND-RP312

Topic	Page
About the DC-bus Conditioner Module	1
Before You Begin	1
Install the DC-bus Conditioner Module	2
Connector Data	6
Wiring Requirements	7
Additional Resources	11

About the DC-bus Conditioner Module

The 2198-DCBUSCOND-RP312 DC-bus conditioner module is used in applications with all bus supplies in the following situations:

- Decreases the voltage stress on insulation components in an inverter system with long cable lengths.
- To extend the DC-bus voltage to another inverter cluster.

See the Kinetix® 5700 Servo Drives User Manual, publication 2198-UM002, for detailed information on system configurations that include the DC-bus conditioner module.

Before You Begin

Remove all packing material, wedges, and braces from within and around the components. After unpacking, check the item nameplate catalog number against the purchase order.

The Kinetix 5700 DC-bus conditioner module includes the following accessory items:

- Parts kit containing stud/lug cover with wires, lug-cover bottom plate, hex nuts and spacers for M8 studs, and 55 mm DC-bus link. Stud cover for systems without wires attached is installed on each module.
- Wiring plugs for the module status (MS) and 24V DC input power (CP) connectors.
- Flexible bus bars, 2 each.

  TIP Replacement connector sets (catalog number 2198-KITCON-DCBUSCOND) is also available. See the Kinetix Servo Drives Specifications Technical Data, publication KNX-TD003, for more information.

- These installation instructions, publication 2198-IN016.

Install the DC-bus Conditioner Module

These procedures assume that you have prepared your panel, mounted your Kinetix 5700 servo drives, and understand how to bond your system. For installation instructions regarding equipment and accessories not included here, refer to the instructions that came with those products.

SHOCK HAZARD: To avoid the hazard of electrical shock, perform all mounting and wiring of the Kinetix 5700 drive modules before applying power. Once power is applied, and then removed, you must wait 5 minutes and verify that the DC-bus voltage has discharged before servicing.

ATTENTION: Plan the installation of your system so that you can perform all cutting, drilling, tapping, and welding with the system removed from the enclosure. Because the system is of open type construction, be careful to keep any metal debris from falling into it. Metal debris or other foreign matter can become lodged in the circuitry, which can result in damage to components.

Zero-stack Tab and Cutout

Engaging the zero-stack tab and cutout from module-to-module is required for shared-bus drive systems and includes the Kinetix 5700 DC-bus conditioner module. This is done to make sure that the module connectors are spaced properly to accept the shared-bus connection system.

Zero-stack Tab and Cutout Example

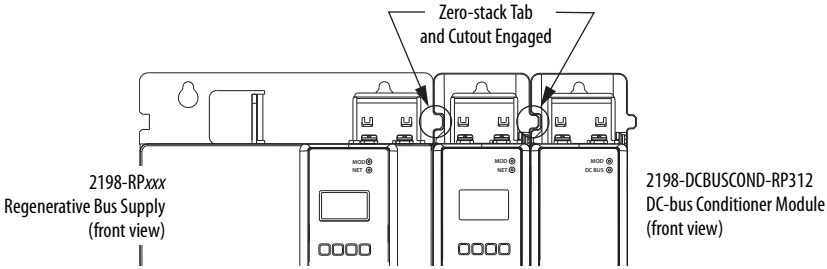

Clearance Requirements

The DC-bus conditioner requires clearance above the module for access to the DC-bus studs and side-to-side for the DC-bus wiring that attaches to the studs. Refer to the Kinetix 5700 Servo Drives User Manual, publication 2198-UM002, for system clearance information.

Minimum Clearance Requirements

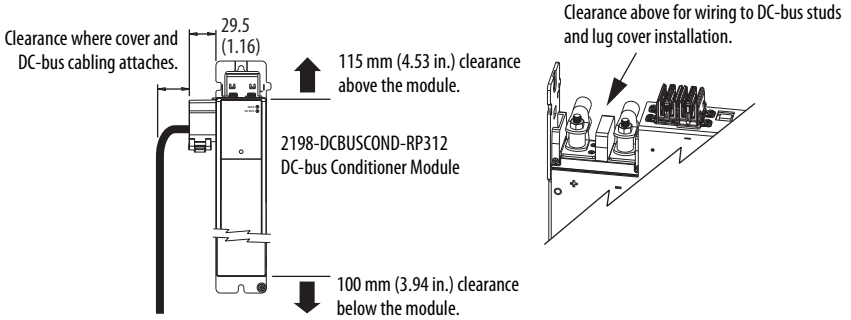

Mount the DC-bus Conditioner Module

The following mounting guidelines apply:

- The DC-bus conditioner module is required with a 2198-RP*xxx* regenerative-bus supply cluster when the combined motor cable lengths exceed 400 m (1312 ft).
- The DC-bus conditioner module is also required with all extended clusters.
- The DC-bus conditioner module is required with all regenerative-bus supply clusters and extended clusters when using an impedance-grounded power configuration.

Kinetix 5700 Drive System with Single Drive Cluster

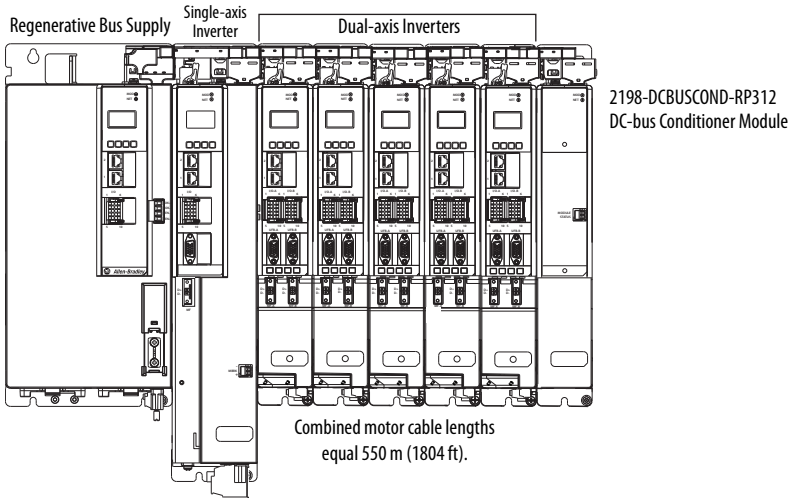

In this example, the DC-bus conditioner module is required because the combined motor cable length exceeds 400 m (1312 ft). The 2198-RP*xxx* module is positioned on the far left, with the DC-bus supply feeding into the inverter with the highest power rating.

Refer to the Kinetix 5700 Servo Drives User Manual, publication 2198-UM002, for more information and examples of single cluster configurations.

Kinetix 5700 Drive System with Extended (208 A) Drive Cluster

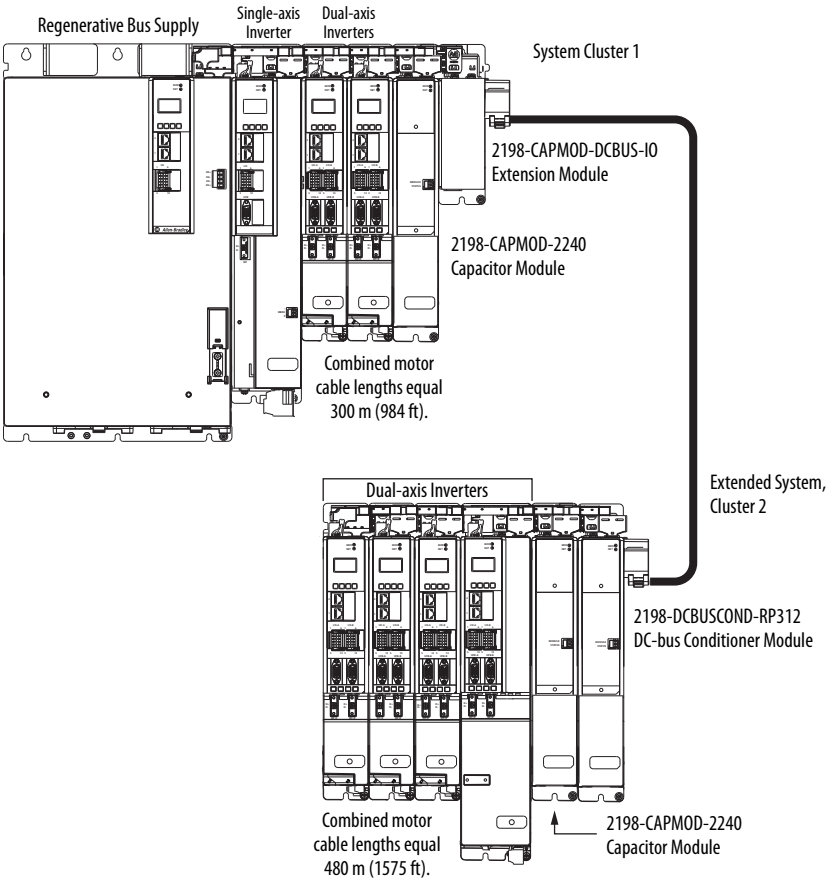

In this example, Cluster 1 does not require a DC-bus conditioner module because the combined motor cable lengths are <400 m (1312 ft). The extension module is required because the DC-bus current is ≥104 A, up to 208 A, maximum.

Refer to the Kinetix 5700 Servo Drives User Manual, publication 2198-UM002, for more information and examples of extended cluster configurations.

Product Dimensions

Refer to the Kinetix 5700 Servo Drives User Manual, publication 2198-UM002, for system-wide drill hole specifications.

DC-bus Conditioner Module Dimensions

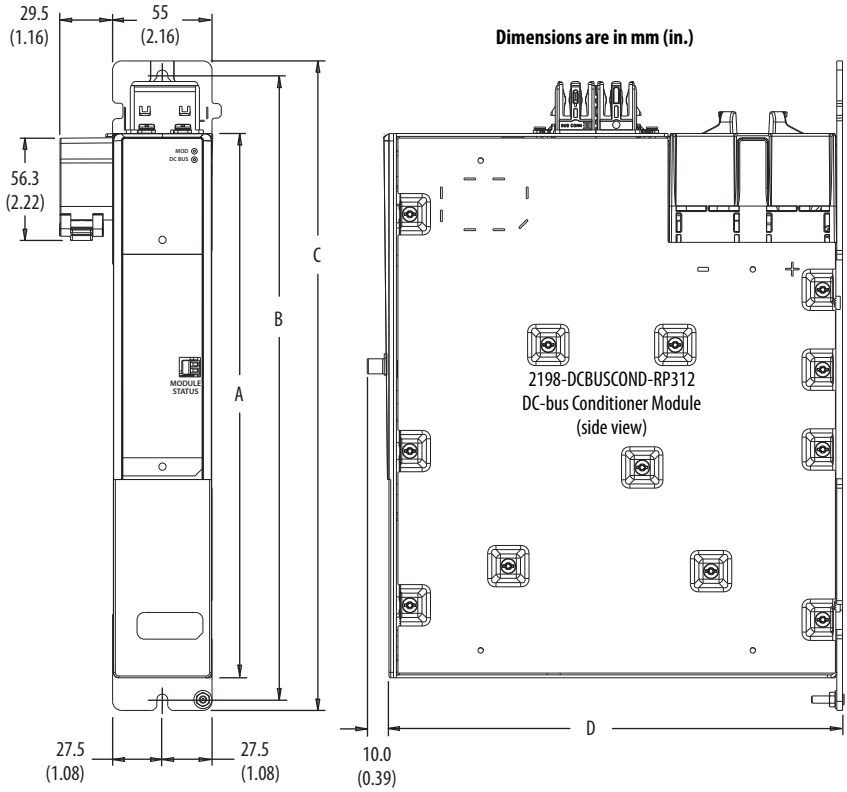

DC-bus Conditioner Module Cat. No.	A	B (1)	C	D
2198-DCBUSCOND-RP312	300 (11.81)	345 (13.58)	358 (14.09)	253 (10.0)

(1) The recommended mounting hardware is M5 (#10-32) steel bolts. Apply 4.0 N•m (35.4 lb•in) maximum torque to each fastener.

Connector Data

Lug spacers are needed only when wiring both external DC-bus and active shunt connections to the lug studs. Two types of lug covers are provided, one for systems with external DC-bus or active shunt wires attached and one without.

DC-bus Conditioner Module Features and Indicators

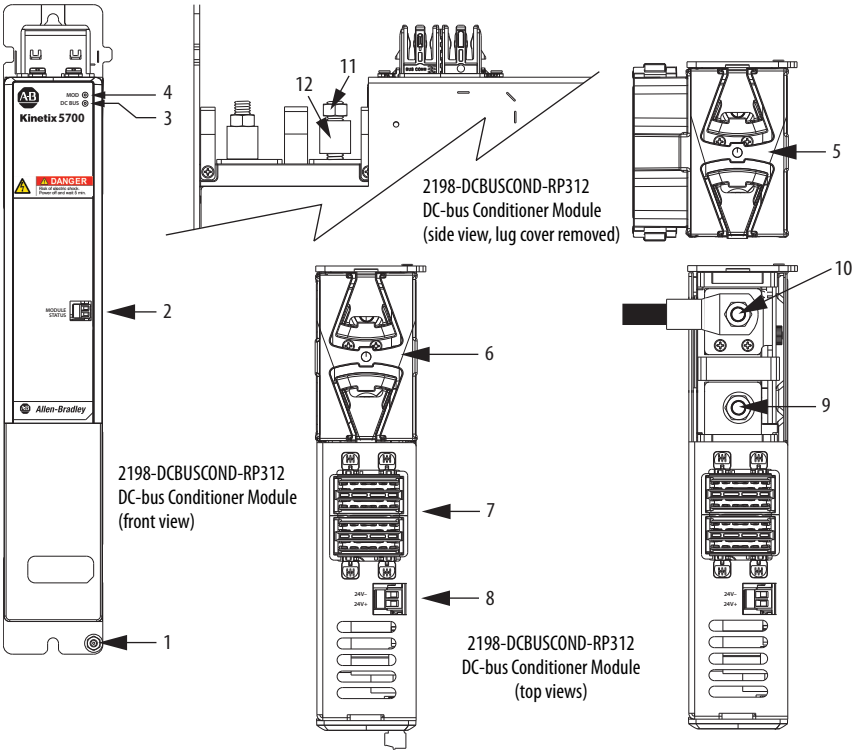

Item	Description
1	Ground stud
2	Module status (MS) connector
3	DC Bus status indicator (1)
4	Module status indicator (1)
5	Stud/lug cover with wires (2)
6	Stud cover without wires

Item	Description
7	DC-bus (DC) connector
8	24V control input power (CP) connector
9	DC– M8 stud (external DC-bus)
10	DC+ M8 stud (external DC-bus), shown with wire lug
11	M8 hex nut
12	Lug spacer

(1) See the Kinetix 5700 Servo Drives User Manual, publication 2198-UM002, for information on troubleshooting the Module and DC Bus status indicators.

(2) This example shows the lug cover oriented for wires exiting to the left (adjacent module is on the far left of the drive configuration). Rotate lug cover 180° when wires exit to the right (adjacent module is on the far right of the drive configuration).

DC Bus (DC) Connector Pinout

DC Pin	Description	Signal
Bus link	DC bus connections	DC–
		DC+

Control Input Power (CP) Connector Pinout

CP Pin	Description	Signal
1	24V power supply, customer-supplied	24V+
2	24V common	24V–

Module Status (MS) Connector Pinout

MS Pin	Description	Signal
1	Module status relay output +	RELAY+
2	Module status relay output –	RELAY–

Wiring Requirements

IMPORTANT The National Electrical Code and local electrical codes take precedence over the values and methods provided.

DC-bus Conditioner Module Wiring Requirements

Connector Description	Pin	Signal	Recommended Wire Size mm^2 (AWG)	Strip Length mm (in.)	Torque Value N•m (lb•in)
Module Status	MS-1 MS-2	RELAY+ RELAY–	0.14…1.5 (28…16)	7.0 (0.28)	0.22…0.25 (1.9…2.2)
PELV/SELV 24V power (plug)	CP-1 CP-2	24V+ 24V–	0.5…2.5 (20…14)	7.0 (0.28)	0.22…0.25 (1.9…2.2)
DC-bus power	Bus-bar	DC– DC+	N/A (1)	N/A (1)	N/A (1)
DC-bus studs	Bus-bar		N/A	N/A	18 (156)
	Lugs		53.5 (1/0 AWG) 104 A 152 (300 kcmil) 208 A	N/A (2)	

(1) DC bus connections are always made from drive-to-drive over the shared-bus connection system. These terminals do not receive discrete wires.
(2) Strip length for the DC-bus studs depend on the customer-supplied lugs.

ATTENTION: To avoid personal injury and/or equipment damage, observe the following:

- Make sure that the installation complies with specifications regarding wire types, conductor sizes, branch circuit protection, and disconnect devices. The National Electrical Code (NEC) and local codes outline provisions for safely installing electrical equipment.
- Use power connectors for connection purposes only. Do not use them to turn the unit on and off.

Wire an External Active Shunt

Active shunts wire to the DC-bus studs. The DC-bus conditioner modules are equipped with spacers that slide onto the M8 studs. When the system configuration includes external DC-bus and active shunt connections, external DC-bus connections are made below the spacer and active shunt connections are made above the spacer.

Active Shunt Connections

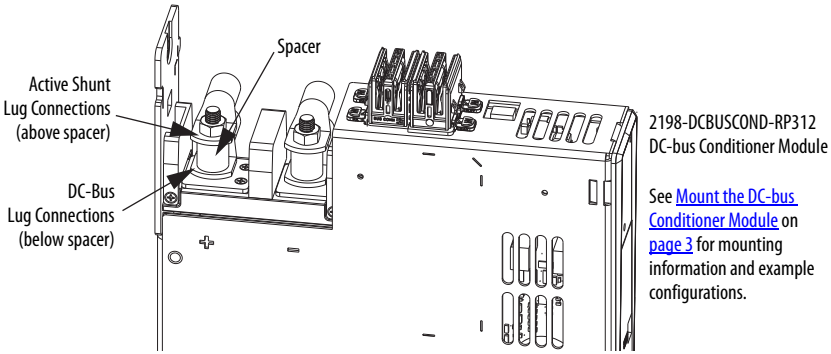

Refer to the Kinetix 5700 Servo Drives User Manual, publication 2198-UM002, for active shunts that are available from Rockwell Automation® Encompass™ partner Powerohm Resistors (http://www.powerohm.com).

Connect Modules with Flexible Bus-bars

When the 2198-DCBUSCOND-RP312 DC-bus conditioner module is used with another module, two flexible bus-bars make the external DC-bus lug connections to the 2198-CAPMOD-2240 capacitor module or 2198-CAPMOD-DCBUS-IO extension module. The DC-bus links must also be installed.

Flexible Bus-bar Example

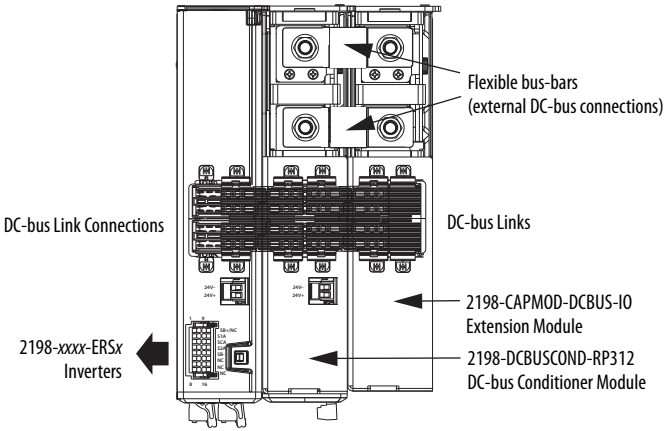

In this example, the two modules that are connected by flexible bus-bars are the DC-bus conditioner module and extension module. However, depending on the drive system configuration, it's possible that any two of these modules (DC-bus conditioner, capacitor, or extension module) could be connected and in any order.

ATTENTION: To avoid damage to components on 208 A systems, the DC-bus links and the flexible bus-bars must be installed.

Refer to the Kinetix 5700 Servo Drives User Manual, publication 2198-UM002, for more information on drive system configurations.

Apply Stud/Lug Covers

Covers ship with the DC-bus conditioner modules and are used to protect you from the electrical hazard that is present on the DC-bus studs, lugs/wires, and flexible bus-bars that are attached to the modules. Insert the appropriate cover over the external DC-bus connections. You can rotate the covers 180° to accommodate lugs, wires, or flexible bus-bars exiting from either the left or right.

ATTENTION: To avoid personal injury, make sure that the appropriate cover is inserted over the DC-bus studs, lugs/wires, or flexible bus-bars when installing the DC-bus conditioner module, capacitor module, or extension module. Covers with wires also require a hinged bottom plate to prevent access from below.

Stud/Lug Cover With Wires

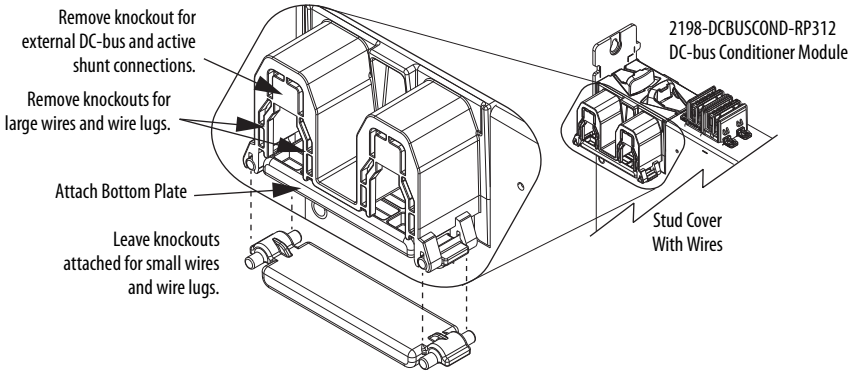

ATTENTION: To avoid unintentional damage to the lug cover, we recommend cutting the knockout to remove it from the cover.

Stud Cover With Flexible Bus-bars

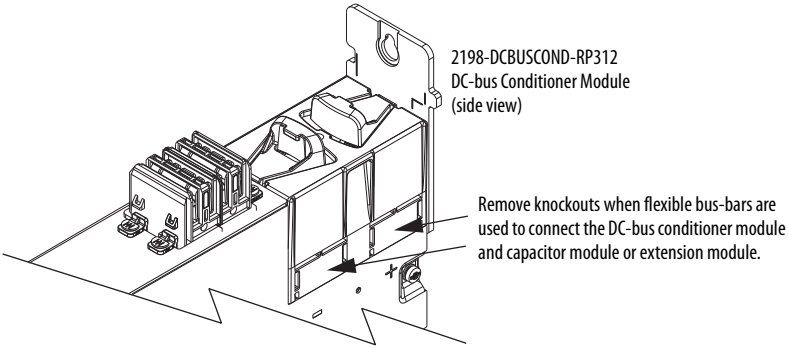

Ground Your DC-bus Conditioner Module to the Subpanel

Ground Bulletin 2198 drives and DC-bus conditioner modules to a bonded cabinet ground-bus with a braided ground strap.

Connecting the Braided Ground Strap

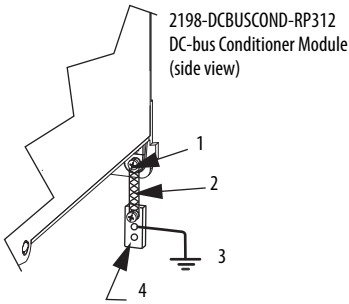

Item	Description
1	Ground screw (green) 2.0 N•m (17.5 lb•in), max
2	Braided ground strap (customer supplied) (1)
3	Ground grid or power distribution ground
4	Bonded cabinet ground-bus (customer supplied)

(1) Make braided ground straps 12 mm (0.5 in.) by 0.8 mm (0.03 in.). Keep straps as short as possible.

Additional Resources

These documents contain additional information concerning related products from Rockwell Automation.

Resource	Description
Kinetix 5700 Servo Drives User Manual, publication 2198-UM002	Provides information on installing, configuring, starting, and troubleshooting your Kinetix 5700 servo drive system.
Kinetix 5700 Capacitor Modules Installation Instructions, publication 2198-IN008	Provides information on installing and wiring the Kinetix 5700 capacitor module and extension module.
Industrial Automation Wiring and Grounding Guidelines, publication 1770-4.1	Provides general guidelines for installing a Rockwell Automation industrial system.
Product Certifications website, rok.auto/certifications	Provides declarations of conformity, certificates, and other certification details.

You can view or download publications at http://www.rockwellautomation.com/global/literature-library/overview.page.

Rockwell Automation Support

Use the following resources to access support information.

Technical Support Center	Knowledgebase Articles, How-to Videos, FAQs, Chat, User Forums, and Product Notification Updates.	https://rockwellautomation.custhelp.com/
Local Technical Support Phone Numbers	Locate the phone number for your country.	http://www.rockwellautomation.com/global/support/get-support-now.page
Direct Dial Codes	Find the Direct Dial Code for your product. Use the code to route your call directly to a technical support engineer.	http://www.rockwellautomation.com/global/support/direct-dial.page
Literature Library	Installation Instructions, Manuals, Brochures, and Technical Data.	http://www.rockwellautomation.com/global/literature-library/overview.page
Product Compatibility and Download Center (PCDC)	Get help determining how products interact, check features and capabilities, and find associated firmware.	http://www.rockwellautomation.com/global/support/pcdc.page

Documentation Feedback

Your comments help us serve your documentation needs better. If you have any suggestions on how to improve this document, complete the How Are We Doing? form at http://literature.rockwellautomation.com/idc/groups/literature/documents/du/ra-du002_-en-e.pdf.

At the end of its life, this equipment should be collected separately from any unsorted municipal waste.

Rockwell Automation maintains current product environmental information on its website at http://www.rockwellautomation.com/rockwellautomation/about-us/sustainability-ethics/product-environmental-compliance.page.

Allen-Bradley, Encompass, Kinetix, Rockwell Automation, and Rockwell Software are trademarks of Rockwell Automation, Inc.

Trademarks not belonging to Rockwell Automation are property of their respective companies.

Rockwell Otomasyon Ticaret A.Ş., Kar Plaza İş Merkezi E Blok Kat:6 34752 İçerenköy, İstanbul, Tel: +90 (216) 5698400

www.rockwellautomation.com

Power, Control and Information Solutions Headquarters

Americas: Rockwell Automation, 1201 South Second Street, Milwaukee, WI 53204-2496 USA, Tel: (1) 414.382.2000, Fax: (1) 414.382.4444
Europe/Middle East/Africa: Rockwell Automation NV, Pegasus Park, De Kleetlaan 12a, 1831 Diegem, Belgium, Tel: (32) 2 663 0600, Fax: (32) 2 663 0640
Asia Pacific: Rockwell Automation, Level 14, Core F, Cyberport 3, 100 Cyberport Road, Hong Kong, Tel: (852) 2887 4788, Fax: (852) 2508 1846

Publication 2198-IN016B-EN-P - October 2018

PN-519144

Supersedes Publication 2198-IN016A-EN-P - August 2018

Copyright © 2018 Rockwell Automation, Inc. All rights reserved. Printed in the U.S.A.