Installation Instructions

Original Instructions

PowerFlex 755 IP00, NEMA/UL Open Type Drive Frames 8…10

Catalog Numbers 200…1500 kW (250…2000 Hp)

Topic	Page
Summary of Changes	2
General Precautions	2
Certifications	3
Overview	4
Installation Overview	6
AC Input Drives	8
Common DC Input Drives	12
Installation Tools	16
Enclosure Requirements	16
CE Conformity	23
Horizontal Mounting Guidelines – Single Drive Unit Only	26
Dimensions	28
Lifting	36
Drive Installation	38
Selecting/Verifying Control Transformer Voltage	41
Installing the Control Pod in the Drive	42
Power Wiring	45
Kit Installation Guidelines	49
Cable Routing	58
I/O Wiring	59
Fuse and Circuit Breaker Ratings	67
Additional Resources	76

This document provides instructions for the installation of an IP00, Open Type PowerFlex® 755 drive (Frames 8...10) in a user supplied enclosure.

The information provided in this publication supplements the PowerFlex 750-Series AC Drives Installation Instructions, publication 750-IN001, and is intended for qualified drive service personnel only.

Summary of Changes

This publication contains new and updated information as indicated in the following table.

Topic	Page
Removed the footnote from Table G.	5
Corrected catalog numbers in the AC Input Drive Installation Kits table, corrected footnote 8, and added footnote 9.	10
Corrected catalog numbers in the Common DC Input Drive Installation Kits table, corrected footnote 6, and added footnote 7.	14
Updated the Additional Resources table.	76

General Precautions

Qualified Personnel

ATTENTION: Only qualified personnel familiar with adjustable frequency AC drives and associated machinery should plan or implement the installation, start-up and subsequent maintenance of the system. Failure to comply may result in personal injury and/or equipment damage.

Personal Safety

ATTENTION: To avoid an electric shock hazard, ensure that all power to the drive has been removed before proceeding. In addition, before servicing, verify that the voltage on the bus capacitors has discharged. Measure the DC bus voltage on Frame 8 drives at the DC+ and DC- TESTPOINT sockets on the front of the power module (see page 47). The voltage must be zero.

ATTENTION: Hazard of personal injury or equipment damage exists when using bipolar input sources. Noise and drift in sensitive input circuits can cause unpredictable changes in motor speed and direction. Use speed command parameters to help reduce input source sensitivity.

ATTENTION: Risk of injury or equipment damage exists. DPI™ or SCANport™ host products must not be directly connected together via 1202 cables. Unpredictable behavior can result if two or more devices are connected in this manner.

ATTENTION: The drive start/stop/enable control circuitry includes solid state components. If hazards due to accidental contact with moving machinery or unintentional flow of liquid, gas or solids exists, an additional hardwired stop circuit may be required to remove the AC line to the drive. An auxiliary braking method may be required.

Personal Safety (continued)

ATTENTION: Hazard of personal injury or equipment damage due to unexpected machine operation exists if the drive is configured to automatically issue a Start or Run command. Do not use these functions without considering applicable local, national and international codes, standards, regulations or industry guidelines.

Product Safety

ATTENTION: An incorrectly applied or installed drive can result in component damage or a reduction in product life. Wiring or application errors such as under sizing the motor, incorrect or inadequate AC supply, or excessive surrounding air temperatures may result in malfunction of the system.

ATTENTION: This drive contains ESD (Electrostatic Discharge) sensitive parts and assemblies. Static control precautions are required when installing, testing, servicing or repairing this assembly. Component damage may result if ESD control procedures are not followed. If you are not familiar with static control procedures, reference Guarding Against Electrostatic Damage, publication 8000-4.5.2 or any other applicable ESD protection handbook.

ATTENTION: Configuring an analog input for 0-20 mA operation and driving it from a voltage source could cause component damage. Verify proper configuration prior to applying input signals.

ATTENTION: A contactor or other device that routinely disconnects and reapplies the AC line to the drive to start and stop the motor can cause drive hardware damage. The drive is designed to use control input signals that will start and stop the motor. If an input device is used, operation must not exceed one cycle per minute or drive damage will occur.

Class 1 LED Product

ATTENTION: Hazard of permanent eye damage exists when using optical transmission equipment. This product emits intense light and invisible radiation. Do not look into module ports or fiber optic cable connectors.

Certifications

See the PowerFlex 750-Series AC Drives Technical Data, publication 750-TD001, for detailed specifications and certifications.

IMPORTANT To meet UL certification, the Field Termination and Control Pod kits described on page 10 or page 14 must be used.

Overview

Selecting and Integrating an IP00 System

The following steps will guide you in planning and installing a PowerFlex 755 IP00, NEMA/UL Open Type drive.

1. **Considerations**
   - Drive size (Hp & V AC), required accessories/options (HIM, comms, etc.)
   - Ingress protection of system
   - Mounting orientation of drive
   - Cooling method, venting orientation, alignment of venting
   - Control pod mounting location
   - Cabling entry/exit scheme and cable routing provisions
   - Roll-out cart required
   - Personnel safety and necessary tooling
2. **Selection**
   - Select and purchase enclosure with sub-panel and ingress accessories (page 16)
   - Select and purchase drive and corresponding drive options (see 750-TD001)
   - Select and purchase pod and corresponding cables (page 10 or page 14)
   - Select and purchase field termination kits (page 10 or page 14)
   - Select and purchase appropriate mounting kits (drive mounting & floor - page 10 or page 14)
   - Select and purchase door fans (pages 20...21)
   - Select and purchase necessary wire and cabling (pages 45 & 59)
3. **Prepare the Enclosure**
   - Create ventilation openings, mount door fans (pages 17...21)
   - Provisions for accessories (HIM cradle, etc. - see 750-TD001)
   - Fabricate and mount inlet and outlet plenums (pages 17...19)
   - Drill sub-panel(s) (page 39 & page 40)
   - Mount field termination kit, mounting brackets, and floor kit (page 39 & page 40)
   - Mounting of customer specified accessories
   - Remote mounting of control pod (if specified - see 750-IN015)
   - Mount sub-panel(s)
4. **Power and Ground Wiring**
   - Ensure proper grounding (page 45)
   - Position & secure movable L-brackets (page 49)
   - Properly terminate power cables (page 48)
   - Attach power cabling (page 48)
5. **Roll-in and Secure the Drive Unit**
   - Raise drive unit to vertical orientation (page 37)
   - Position roll-out cart (see 750-IN001)
   - Lift drive unit onto cart (see 750-IN001)
   - Roll drive unit into cabinet and secure (see 750-IN001)
6. **Control Wiring**
   - Mount control pod into drive (if specified - page 42)
   - Verify control transformer voltage (page 41)
   - Ensure proper cable routing (page 58)
   - Attach pod power and fiber optic cables (page 58)
   - Install real time clock battery and HIM cable (page 60)
   - Install remaining control wiring (pages 59...66)
   - Verify correct torque on all fasteners and connectors
7. **Commission the System**

Catalog Number Explanation

Position

1…3	*4*	*5*	*6*	*7*	*8…10*	*11*	*12*	*13*	*14*	*15*	*16*	*17*	*18*
20G	1	1	T	D	485	A	N	0	N	N	N	N	N
a	*b*	*c*	*d*	*e*	*f1…f2*	*g*	*h*						

a

Drive	
Code	Type
20G	PowerFlex 755

b

Future Use

c

Input Type	
Code	Description
1	AC Input w/Precharge
4	DC Input w/Precharge

d

Enclosure	
Code	Description
T	IP00, UL Open Type without Control POD

e

Voltage Rating	
Code	Voltage
C	400V AC / 540V DC
D	480V AC / 650V DC
E	600V AC / 810V DC
F	690V AC / 932V DC (not UL listed)

g

Filtering and CM Cap Configuration		
Code	Filtering	Default CM Cap Connection
A	Yes	Jumper Removed
J	Yes	Jumper Installed

h

Dynamic Braking §		
Code	Internal Resistor	Internal Transistor
N	No	No

§ Not available on Frames 8…10.

f1

ND Rating				
400V AC / 540V DC, 50 Hz Input				
Code	Amps ★	kW ★	Quantity Required	Equivalent Frame Size
C460	460	250	1	8
C540	540	315	1	
C567	567	315	1	
C650	650	355	1	
C750	750	400	1	
C770	770	400	1	
C460	910	500	2	9
C540	1040	560	2	
C567	1090	630	2	
C650	1175	710	2	
C750	1465	800	2	
C770	1480	850	2	
C567	1590	900	3	10
C770	2150	1250	3	

★ To achieve the extended ratings listed for Frames 9 and 10, the base Frame 8 drive must be paralleled 2 or 3 times. Refer to the Drive Rating tables on pages 8, 9, 12, and 13 for detailed information.

f2

ND Rating				
480V AC / 650V DC, 60 Hz Input				
Code	Amps ★	Hp ★	Quantity Required	Equivalent Frame Size
D430	430	350	1	8
D485	485	400	1	
D545	545	450	1	
D617	617	500	1	
D710	710	600	1	
D740	740	650	1	
D430	800	700	2	9
D485	960	800	2	
D545	1045	900	2	
D617	1135	1000	2	
D710	1365	1100	2	
D740	1420	1250	2	
D545	1525	1350	3	10
D740	2070	1750	3	

★ To achieve the extended ratings listed for Frames 9 and 10, the base Frame 8 drive must be paralleled 2 or 3 times. Refer to the Drive Rating tables on pages 8, 9, 12, and 13 for detailed information.

f3

ND Rating				
600V AC / 810V DC, 60 Hz Input				
Code	Amps ★	Hp ★	Quantity Required	Equivalent Frame Size
E295	295	300	1	8
E355	355	350	1	
E395	395	400	1	
E435	435	450	1	
E460	460	500	1	
E510	510	500	1	
E295	595	600	2	9
E355	630	700	2	
E395	760	800	2	
E435	825	900	2	
E460	900	950	2	
E510	980	1000	2	
E395	1110	1100	3	10
E510	1430	1400	3	

★ To achieve the extended ratings listed for Frames 9 and 10, the base Frame 8 drive must be paralleled 2 or 3 times. Refer to the Drive Rating tables on pages 8, 9, 12, and 13 for detailed information.

f4

ND Rating				
690V AC / 932V DC, 60 Hz Input (not UL listed)				
Code	Amps ★	kW ★	Quantity Required	Equivalent Frame Size
F265	265	250	1	8
F330	330	315	1	
F370	370	355	1	
F415	415	400	1	
F460	460	450	1	
F500	500	500	1	
F265	590	560	2	9
F330	650	630	2	
F370	710	710	2	
F415	765	750	2	
F460	795	800	2	
F500	960	900	2	
F370	1040	1000	3	10
F500	1400	1400	3	

★ To achieve the extended ratings listed for Frames 9 and 10, the base Frame 8 drive must be paralleled 2 or 3 times. Refer to the Drive Rating tables on pages 8, 9, 12, and 13 for detailed information.

Installation Overview

AC Input Drives

A typical IP00 installation for an AC input drive is shown below. See pages 8...10 for available kits and ratings.

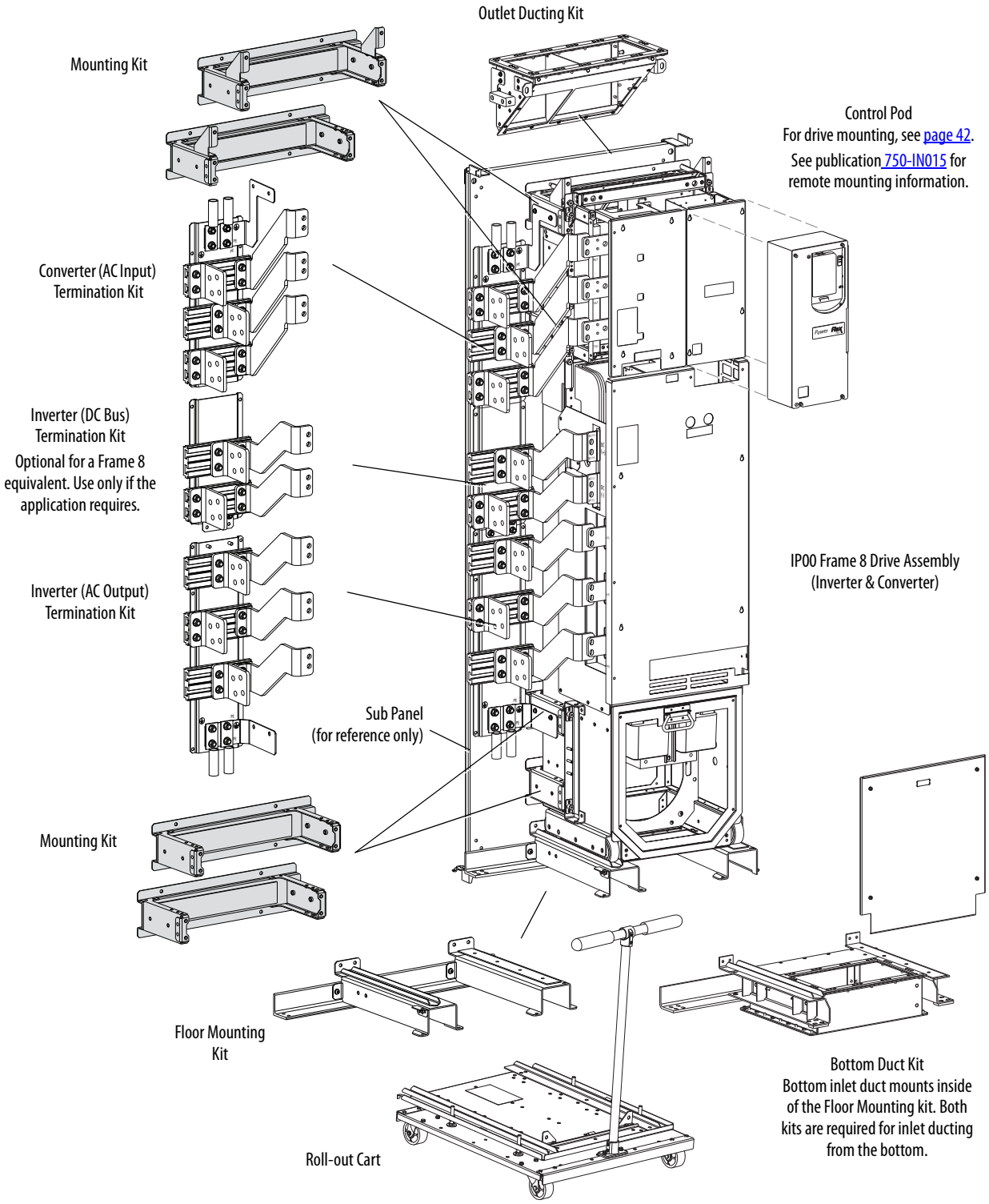

Common DC Input Drives

A typical IP00 installation for a common DC input drive is shown below. See pages 12...14 for available kits and ratings.

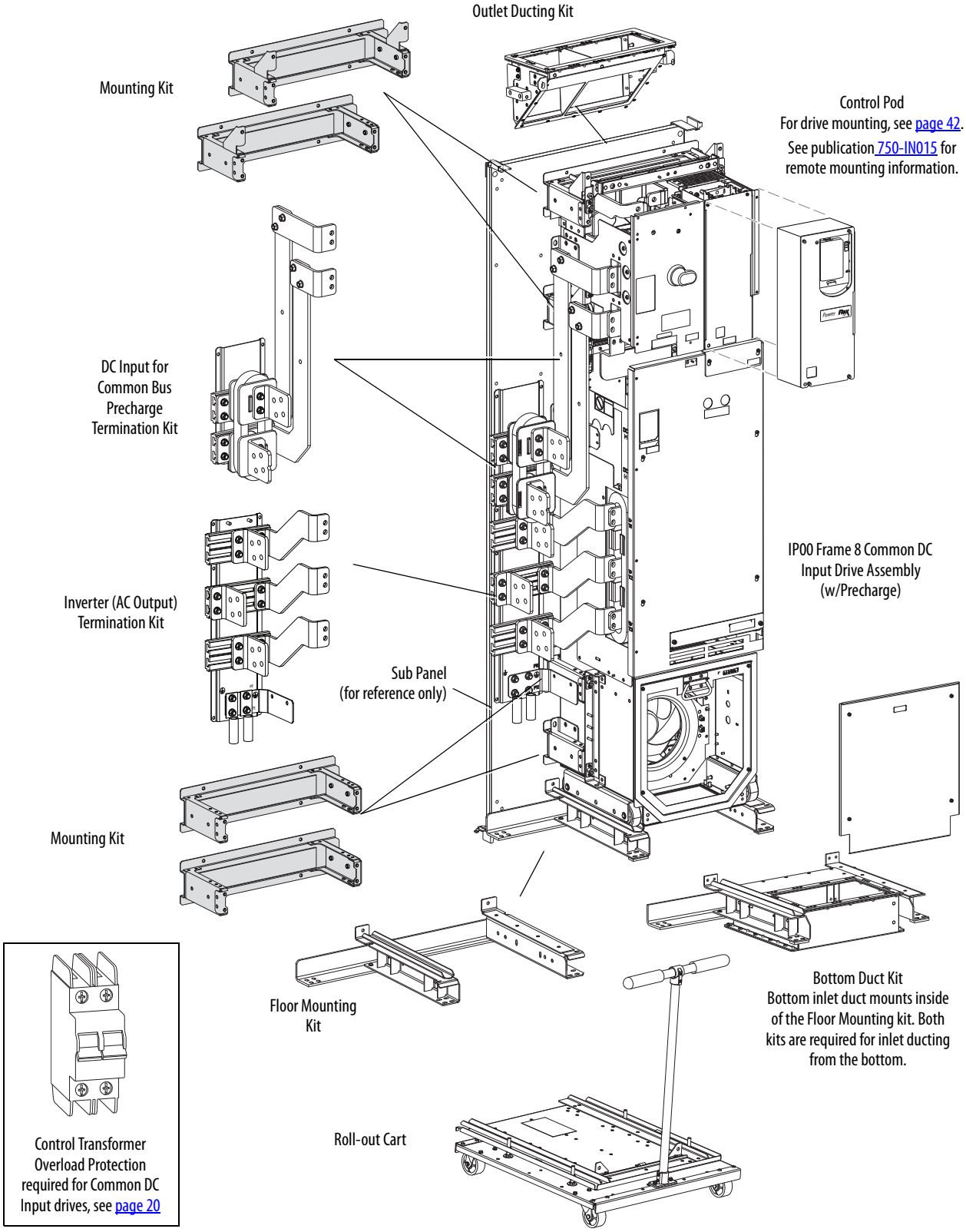

AC Input Drives

Drive Ratings

The following tables provide rating and selection information for the PowerFlex 755 IP00 NEMA/UL Open Type AC input drives.

380…480V AC, Three-Phase, 50 Hz Input
Three-Phase, 0…400 Hz Output

Light Duty					Normal Duty					Heavy Duty					Input Voltage Range	Base Drive Catalog Number	Quantity Required	Equivalent Frame Size
Input Amps	Output Amps			kW	Input Amps	Output Amps			kW	Input Amps	Output Amps			kW	V AC			
	Cont.	1 min	3 s			Cont.	1 min	3 s			Cont.	1 min	3 s					
534	540	594	NA	315	455	460	506	693	250	380	385	578	693	200	360…440	20G11TC460	1	8
578	585	644		315	533	540	594	821	315	450	456	684	821	250	360…440	20G11TC540	1	8
604	612	673		355	560	567	624	851	315	466	472	708	851	250	360…440	20G11TC567	1	8
739	750	825		400	640	650	715	975	355	533	540	810	975	315	360…440	20G11TC650	1	8
784	796	876		450	739	750	825	1125	400	577	585	878	1125	315	360…440	20G11TC750	1	8
819	832	915		450	758	770	847	1155	400	634	642	963	1155	355	360…440	20G11TC770	1	8
1024	1040	1144		560	896	910	1001	1365	500	739	750	1125	1365	400	360…440	20G11TC460	2	9
1073	1090	1199		630	1024	1040	1144	1584	560	867	880	1320	1584	500	360…440	20G11TC540	2	9
1157	1175	1293		710	1073	1090	1199	1638	630	896	910	1365	1638	500	360…440	20G11TC567	2	9
1443	1465	1612		800	1157	1175	1293	1872	710	1024	1040	1560	1872	560	360…440	20G11TC650	2	9
1457	1480	1628		850	1443	1465	1612	2198	800	1073	1090	1635	2198	630	360…440	20G11TC750	2	9
1576	1600	1760		900	1457	1480	1628	2220	850	1157	1175	1763	2220	710	360…440	20G11TC770	2	9
1689	1715	1887		1000	1566	1590	1749	2385	900	1305	1325	1988	2385	710	360…440	20G11TC567	3	10
2294	2330	2563		1400	2117	2150	2365	3225	1250	1773	1800	2700	3225	1000	360…440	20G11TC770	3	10

480V AC, Three-Phase, 60 Hz Input
Three-Phase, 0…400 Hz Output

Light Duty					Normal Duty					Heavy Duty					Input Voltage Range	Base Drive Catalog Number	Quantity Required	Equivalent Frame Size
Input Amps	Output Amps			Hp	Input Amps	Output Amps			Hp	Input Amps	Output Amps			Hp	V AC			
	Cont.	1 min	3 s			Cont.	1 min	3 s			Cont.	1 min	3 s					
458	485	534	NA	400	406	430	473	666	350	349	370	555	666	300	432…528	20G11TD430	1	8
514	545	600		450	458	485	534	745	400	391	414	621	745	350	432…528	20G11TD485	1	8
557	590	649		500	514	545	600	818	450	428	454	681	818	350	432…528	20G11TD545	1	8
670	710	781		600	582	617	679	926	500	458	485	728	926	400	432…528	20G11TD617	1	8
722	765	842		650	670	710	781	1065	600	514	545	818	1065	450	432…528	20G11TD710	1	8
755	800	880		700	698	740	817	1110	650	582	617	926	1110	500	432…528	20G11TD740	1	8
906	960	1056		800	755	800	880	1278	700	670	710	1065	1278	600	432…528	20G11TD430	2	9
986	1045	1150		900	906	960	1056	1440	800	750	795	1193	1440	700	432…528	20G11TD485	2	9
1071	1135	1249		1000	986	1045	1150	1568	900	755	800	1200	1568	750	432…528	20G11TD545	2	9
1288	1365	1502		1100	1071	1135	1249	1728	1000	906	960	1440	1728	800	432…528	20G11TD617	2	9
1340	1420	1562		1250	1288	1365	1502	2048	1100	986	1045	1568	2048	900	432…528	20G11TD710	2	9
1453	1540	1694		1350	1340	1420	1562	2130	1250	1071	1135	1703	2130	1000	432…528	20G11TD740	2	9
1562	1655	1821		1500	1439	1525	1678	2288	1350	1199	1270	1905	2288	1100	432…528	20G11TD545	3	10
2114	2240	2464		2000	1953	2070	2277	3105	1750	1633	1730	2595	3105	1650	432…528	20G11TD740	3	10

600V AC, Three-Phase, 60 Hz Input
Three-Phase, 0…400 Hz Output

Light Duty					Normal Duty					Heavy Duty					Input Voltage Range	Base Drive Catalog Number	Quantity Required	Equivalent Frame Size
Input Amps	Output Amps			Hp	Input Amps	Output Amps			Hp	Input Amps	Output Amps			Hp	V AC			
	Cont.	1 min	3 s			Cont.	1 min	3 s			Cont.	1 min	3 s					
335	355	391	NA	350	278	295	325	490	300	257	272	408	490	250	540…660	20G11TE295	1	8
373	395	435		400	335	355	391	533	350	278	295	443	533	300	540…660	20G11TE355	1	8
411	435	479		450	373	395	435	593	400	310	329	494	593	350	540…660	20G11TE395	1	8
434	460	506		500	411	435	479	639	450	335	355	533	639	350	540…660	20G11TE435	1	8
481	510	561		500	434	460	506	711	500	373	395	593	711	400	540…660	20G11TE460	1	8
514	545	600		550	481	510	561	765	500	401	425	638	765	450	540…660	20G11TE510	1	8
651	690	759		700	562	595	655	918	600	481	510	765	918	500	540…660	20G11TE295	2	9
717	760	836		800	595	630	693	1071	700	562	595	893	1071	600	540…660	20G11TE355	2	9
788	835	919		900	717	760	836	1140	800	595	630	945	1140	700	540…660	20G11TE395	2	9
849	900	990		950	779	825	908	1260	900	661	700	1050	1260	750	540…660	20G11TE435	2	9
925	980	1078		1000	849	900	990	1368	950	717	760	1140	1368	800	540…660	20G11TE460	2	9
986	1045	1150		1100	925	980	1078	1470	1000	769	815	1223	1470	900	540…660	20G11TE510	2	9
1151	1220	1342		1200	1048	1110	1221	1665	1100	868	920	1380	1665	1000	540…660	20G11TE395	3	10
1444	1530	1683		1500	1350	1430	1573	2145	1400	1123	1190	1785	2145	1250	540…660	20G11TE510	3	10

690V AC, Three-Phase, 50 Hz Input
Three-Phase, 0…400 Hz Output

Light Duty					Normal Duty					Heavy Duty					Input Voltage Range	Base Drive Catalog Number	Quantity Required	Equivalent Frame Size
Input Amps	Output Amps			kW	Input Amps	Output Amps			kW	Input Amps	Output Amps			kW	V AC			
	Cont.	1 min	3 s			Cont.	1 min	3 s			Cont.	1 min	3 s					
311	330	363	NA	315	250	265	292	375	250	203	215	323	375	200	621…759	20G11TF265	1	8
349	370	407		355	311	330	363	473	315	250	265	398	473	250	621…759	20G11TF330	1	8
386	410	451		400	349	370	407	555	355	290	308	462	555	300	621…759	20G11TF370	1	8
433	460	506		450	391	415	457	639	400	349	370	555	639	355	621…759	20G11TF415	1	8
471	500	550		500	433	460	506	675	450	353	375	563	675	375	621…759	20G11TF460	1	8
499	530	583		530	471	500	550	750	500	389	413	620	750	400	621…759	20G11TF500	1	8
612	650	715		630	556	590	649	885	560	433	460	690	885	450	621…759	20G11TF265	2	9
669	710	781		710	612	650	715	975	630	471	500	750	975	500	621…759	20G11TF330	2	9
744	790	869		800	669	710	781	1065	710	556	590	885	1065	560	621…759	20G11TF370	2	9
810	860	946		850	721	765	842	1170	750	612	650	975	1170	630	621…759	20G11TF415	2	9
904	960	1056		900	749	795	875	1350	800	706	750	1125	1350	710	621…759	20G11TF460	2	9
961	1020	1122		1000	904	960	1056	1440	900	749	795	1193	1440	800	621…759	20G11TF500	2	9
1083	1150	1265		1100	980	1040	1144	1560	1000	815	865	1298	1560	900	621…759	20G11TF370	3	10
1399	1485	1634		1500	1319	1400	1540	2100	1400	1093	1160	1740	2100	1120	621…759	20G11TF500	3	10

AC Input Drive Installation Kits

The following kits are available to assist you with installation of drive components in your enclosure. Note that certain kits are required for proper installation and for UL certification.

		Frame 8 Equivalent		Frame 9 Equivalent		Frame 10 Equivalent			
No.	**Kit**	**Catalog Number**	**Qty.**	**Catalog Number**	**Qty.**	**Catalog Number**	**Qty.**	**Description**	**Notes**
1	Converter (AC Input) Field Termination	20-750-BUS2-F8	1	20-750-BUS2-F9	1	20-750-BUS2-F10	1	Provides power wiring connection.	(4) (5)
2	Inverter (AC Output) Field Termination	20-750-BUS3-F8	1	20-750-BUS3-F9	1	20-750-BUS3-F10	1		
3	Inverter (DC Bus) Field Termination - 400/480V	20-750-BUS4-F8 (1)	1	20-750-BUS4-F9 (3)	1	20-750-BUS4-F10 (3)	1		
	Inverter (DC Bus) Field Termination - 600/690V		1	20-750-BUS6-F9 (3)	1	20-750-BUS6-F10 (3)	1		
4	Mounting, Back Panel	20-750-MNT2-F8	1	20-750-MNT2-F9	1	20-750-MNT2-F10	1	Drive mounting kit includes four brackets per drive unit to mount the drive to the back of the enclosure.	(5)
5	Mounting, Floor/Rail	20-750-MNT3-F8	1	20-750-MNT3-F9	1	20-750-MNT3-F10	1	Includes bottom rails and hardware to utilize the roll-out feature of the drive.	(5)
6	Ducting, Outlet Top	20-750-DUCT2-F8	1	20-750-DUCT2-F8	2	20-750-DUCT2-F8	3	A duct adaptor is provided to direct exhaust air from the top of the drive. Can be used for horizontal or vertical installations.	(5)
7	Ducting, Bottom Inlet	20-750-DUCT4-F8	1	20-750-DUCT4-F8	2	20-750-DUCT4-F8	3	Provides a duct to direct air flow into the bottom of the cabinet. Requires the Floor/Rail kit to secure the duct.	
8	Control Pod	20-750-POD1-F8	1	20-750-POD1-F8	1	20-750-POD1-F8	1	Control Pod including Main Control Board and Fiber Interface Board. Mount in the left most bay of the drive or remotely (see below).	(4) (6)
	Control Pod Remote Harness	20-750-RPD1-F8	1	20-750-RPD1-F8 (9)	2	20-750-RPD1-F8 (9)	3	Hardware, fiber-optic, and power supply cables to remotely mount the control pod up to 23 m (75 ft) from the drive.	(5)
9	24V Harness	20-750-PH1-F8 (2)	0	20-750-PH2-F9	1	20-750-PH3-F10	1	For control pod connection in the drive.	(7)
10	Fiber-optic Cable, 0.6 m (22 in.)	20-750-FCBL1-F8	1					**Important:** Not required if the Remote Mount kit is ordered.	(7) (8)
	Fiber-optic Cable, 2.8 m (110 in.)			20-750-FCBL1-F10	2	20-750-FCBL1-F10	3		
11	Roll-out Cart	20-750-CART1-F8	1	20-750-CART1-F8	1	20-750-CART1-F8	1	A wheeled roll-out cart that facilitates drive installation and removal.	(5)
12	EMC Core	20-750-EMCBUS1-F8	1	20-750-EMCBUS1-F8	2	20-750-EMCBUS1-F8	3	Common mode core kit for converter section input on AC input drives. To be used with 20-750-BUS2-F8. EN 61800-3 compliant installations only.	
		20-750-EMCCM1-F8	1	20-750-EMCCM1-F8	2	20-750-EMCCM1-F8	3	Common mode core kit for inverter section output. For AC Input or Common DC Input drives. EN 61800-3 compliant installations only.	

(1) Optional for Frame 8 equivalent applications; only use if application requires connection to the DC bus (such as a brake or chopper).
(2) Frame 8 equivalent 24V DC harness ships with each drive unit.
(3) Fuses are included.
(4) This kit is required for UL installations.
(5) This is a recommended kit.
(6) This kit is required.
(7) Required when mounting control pod in the drive.
(8) 20-750-PH1-F8 and 20-750-FCBL1-F8 are used for a drive mounted control pod. If the control pod is to be remote mounted up to 23m (75ft), order 20-750-RPD1-F8 kit instead.
(9) For frame 9 and 10 installations, remove the two-position connector from the harnesses and combine the leads into one connector that plugs into P14 on the Fiber Interface Board (see page 43).

7

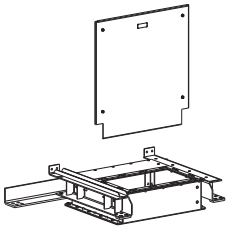

8

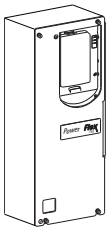

9

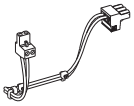

10

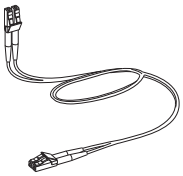

11

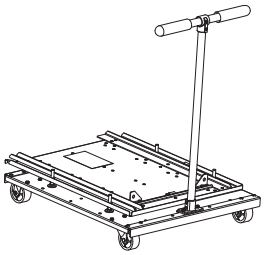

12

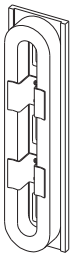

Frame 8

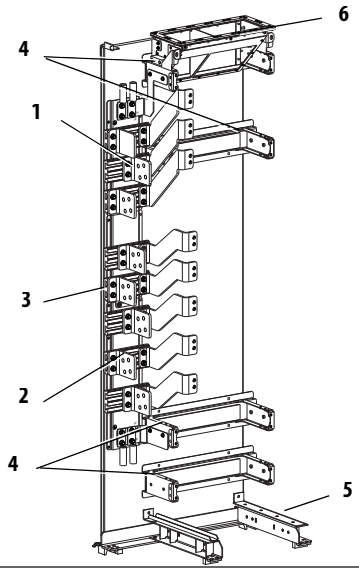

Frame 9

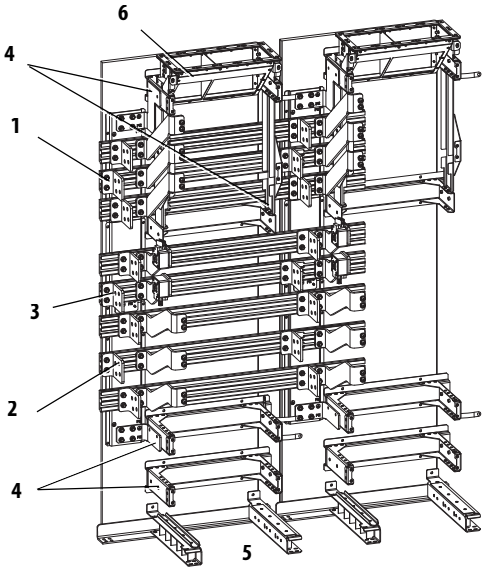

Frame 10

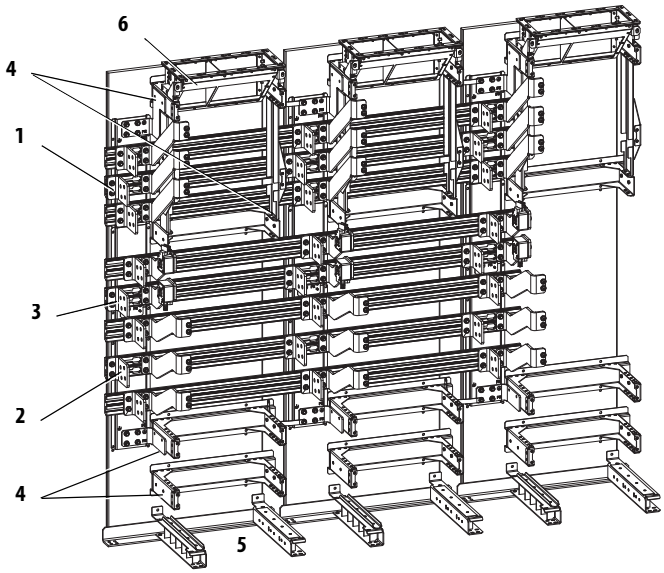

Common DC Input Drives

Drive Ratings

The following tables provide rating and selection information for the common DC input PowerFlex 755 IP00 NEMA/UL Open Type drives.

540V DC, 50 Hz Input
Three-Phase, 0…400 Hz Output

Light Duty					Normal Duty					Heavy Duty					Input Voltage Range	Base Drive Catalog Number	Quantity Required	Equivalent Frame Size
Input Amps	Output Amps			kW	Input Amps	Output Amps			kW	Input Amps	Output Amps			kW	V DC			
	Cont.	1 min	3 s			Cont.	1 min	3 s			Cont.	1 min	3 s					
621	540	594	NA	315	529	460	506	693	250	443	385	578	693	200	486…594	20G14TC460	1	8
673	585	644		315	621	540	594	821	315	525	456	684	821	250	486…594	20G14TC540	1	8
704	612	673		355	652	567	624	851	315	543	472	708	851	250	486…594	20G14TC567	1	8
863	750	825		400	748	650	715	975	355	621	540	810	975	315	486…594	20G14TC650	1	8
916	796	876		450	863	750	825	1125	400	673	585	878	1125	315	486…594	20G14TC750	1	8
957	832	915		450	886	770	847	1155	400	739	642	963	1155	355	486…594	20G14TC770	1	8
1197	1040	1144		560	1047	910	1001	1365	500	863	750	1125	1365	400	486…594	20G14TC460	2	9
1254	1090	1199		630	1197	1040	1144	1584	560	1013	880	1320	1584	500	486…594	20G14TC540	2	9
1352	1175	1293		710	1254	1090	1199	1638	630	1047	910	1365	1638	500	486…594	20G14TC567	2	9
1686	1465	1612		800	1352	1175	1293	1872	710	1197	1040	1560	1872	560	486…594	20G14TC650	2	9
1703	1480	1628		850	1686	1465	1612	2198	800	1254	1090	1635	2198	630	486…594	20G14TC750	2	9
1841	1600	1760		900	1703	1480	1628	2220	850	1352	1175	1763	2220	710	486…594	20G14TC770	2	9
1974	1715	1887		1000	1830	1590	1749	2385	900	1525	1325	1988	2385	710	486…594	20G14TC567	3	10
2681	2330	2563		1400	2474	2150	2365	3225	1250	2071	1800	2700	3225	1000	486…594	20G14TC770	3	10

650V DC, 60 Hz Input
Three-Phase, 0…400 Hz Output

Light Duty					Normal Duty					Heavy Duty					Input Voltage Range	Base Drive Catalog Number	Quantity Required	Equivalent Frame Size
Input Amps	Output Amps			Hp	Input Amps	Output Amps			Hp	Input Amps	Output Amps			Hp	V DC			
	Cont.	1 min	3 s			Cont.	1 min	3 s			Cont.	1 min	3 s					
533	485	534	NA	400	473	430	473	666	350	407	370	555	666	300	585…715	20G14TD430	1	8
599	545	600		450	533	485	534	745	400	455	414	621	745	350	585…715	20G14TD485	1	8
649	590	649		500	599	545	600	818	450	499	454	681	818	350	585…715	20G14TD545	1	8
781	710	781		600	678	617	679	926	500	533	485	728	926	400	585…715	20G14TD617	1	8
841	765	842		650	781	710	781	1065	600	599	545	818	1065	450	585…715	20G14TD710	1	8
880	800	880		700	814	740	817	1110	650	678	617	926	1110	500	585…715	20G14TD740	1	8
1055	960	1056		800	880	800	880	1278	700	781	710	1065	1278	600	585…715	20G14TD430	2	9
1149	1045	1150		900	1055	960	1056	1440	800	874	795	1193	1440	700	585…715	20G14TD485	2	9
1248	1135	1249		1000	1149	1045	1150	1568	900	880	800	1200	1568	750	585…715	20G14TD545	2	9
1501	1365	1502		1100	1248	1135	1249	1728	1000	1055	960	1440	1728	800	585…715	20G14TD617	2	9
1561	1420	1562		1250	1501	1365	1502	2048	1100	1149	1045	1568	2048	900	585…715	20G14TD710	2	9
1693	1540	1694		1350	1561	1420	1562	2130	1250	1248	1135	1703	2130	1000	585…715	20G14TD740	2	9
1819	1655	1821		1500	1677	1525	1678	2288	1350	1396	1270	1905	2288	1100	585…715	20G14TD545	3	10
2463	2240	2464		2000	2276	2070	2277	3105	1750	1902	1730	2595	3105	1650	585…715	20G14TD740	3	10

810V DC, 60 Hz Input
Three-Phase, 0…400 Hz Output

Light Duty					Normal Duty					Heavy Duty					Input Voltage Range	Base Drive Catalog Number	Quantity Required	Equivalent Frame Size
Input Amps	Output Amps			Hp	Input Amps	Output Amps			Hp	Input Amps	Output Amps			Hp	V DC			
	Cont.	1 min	3 s			Cont.	1 min	3 s			Cont.	1 min	3 s					
391	355	391	NA	350	325	295	325	490	300	300	272	408	490	250	729…891	20G14TE295	1	8
436	395	435		400	391	355	391	533	350	325	295	443	533	300	729…891	20G14TE355	1	8
480	435	479		450	436	395	435	593	400	363	329	494	593	350	729…891	20G14TE395	1	8
507	460	506		500	480	435	479	639	450	391	355	533	639	350	729…891	20G14TE435	1	8
562	510	561		500	507	460	506	711	500	436	395	593	711	400	729…891	20G14TE460	1	8
601	545	600		550	562	510	561	765	500	469	425	638	765	450	729…891	20G14TE510	1	8
761	690	759		700	656	595	655	918	600	562	510	765	918	500	729…891	20G14TE295	2	9
838	760	836		800	695	630	693	1071	700	656	595	893	1071	600	729…891	20G14TE355	2	9
921	835	919		900	838	760	836	1140	800	695	630	945	1140	700	729…891	20G14TE395	2	9
993	900	990		950	910	825	908	1260	900	772	700	1050	1260	750	729…891	20G14TE435	2	9
1081	980	1078		1000	993	900	990	1368	950	838	760	1140	1368	800	729…891	20G14TE460	2	9
1152	1045	1150		1100	1081	980	1078	1470	1000	899	815	1223	1470	900	729…891	20G14TE510	2	9
1345	1220	1342		1200	1224	1110	1221	1665	1100	1015	920	1380	1665	1000	729…891	20G14TE395	3	10
1687	1530	1683		1500	1577	1430	1573	2145	1400	1312	1190	1785	2145	1250	729…891	20G14TE510	3	10

932V DC, 50 Hz Input
Three-Phase, 0…400 Hz Output

Light Duty					Normal Duty					Heavy Duty					Input Voltage Range	Base Drive Catalog Number	Quantity Required	Equivalent Frame Size
Input Amps	Output Amps			kW	Input Amps	Output Amps			kW	Input Amps	Output Amps			kW	V DC			
	Cont.	1 min	3 s			Cont.	1 min	3 s			Cont.	1 min	3 s					
363	330	363	NA	315	292	265	292	375	250	237	215	323	375	200	839…1025	20G14TF265	1	8
407	370	407		355	363	330	363	473	315	292	265	398	473	250	839…1025	20G14TF330	1	8
451	410	451		400	407	370	407	555	355	339	308	462	555	300	839…1025	20G14TF370	1	8
506	460	506		450	457	415	457	639	400	407	370	555	639	355	839…1025	20G14TF415	1	8
550	500	550		500	506	460	506	675	450	413	375	563	675	375	839…1025	20G14TF460	1	8
583	530	583		530	550	500	550	750	500	454	413	620	750	400	839…1025	20G14TF500	1	8
715	650	715		630	649	590	649	885	560	506	460	690	885	450	839…1025	20G14TF265	2	9
781	710	781		710	715	650	715	975	630	550	500	750	975	500	839…1025	20G14TF330	2	9
869	790	869		800	781	710	781	1065	710	649	590	885	1065	560	839…1025	20G14TF370	2	9
946	860	946		850	842	765	842	1170	750	715	650	975	1170	630	839…1025	20G14TF415	2	9
1056	960	1056		900	875	795	875	1350	800	825	750	1125	1350	710	839…1025	20G14TF460	2	9
1122	1020	1122		1000	1056	960	1056	1440	900	875	795	1193	1440	800	839…1025	20G14TF500	2	9
1265	1150	1265		1100	1144	1040	1144	1560	1000	952	865	1298	1560	900	839…1025	20G14TF370	3	10
1634	1485	1634		1500	1540	1400	1540	2100	1400	1276	1160	1740	2100	1120	839…1025	20G14TF500	3	10

Common DC Input Drive Installation Kits

The following kits are available to assist you with installation of drive components in your enclosure. Note that certain kits are required for proper installation and for UL certification.

		Frame 8 Equivalent		Frame 9 Equivalent		Frame 10 Equivalent			
No.	**Kit**	**Catalog Number**	**Qty.**	**Catalog Number**	**Qty.**	**Catalog Number**	**Qty.**	**Description**	**Notes**
1	DC Input for Common Bus Precharge	20-750-BUS5-F8	1	20-750-BUS5-F9	1	20-750-BUS5-F10	1	Provides power wiring connection. 20-750-BUS5 kits include EMC input cores.	(2) (3)
2	Inverter (AC Output) Field Termination	20-750-BUS3-F8	1	20-750-BUS3-F9	1	20-750-BUS3-F10	1		
3	Mounting, Back Panel	20-750-MNT2-F8	1	20-750-MNT2-F9	1	20-750-MNT2-F10	1	Drive mounting kit includes four brackets per drive unit to mount the drive to the back of the enclosure.	(3)
4	Mounting, Floor/Rail	20-750-MNT3-F8	1	20-750-MNT3-F9	1	20-750-MNT3-F10	1	Includes bottom rails and hardware to utilize the roll-out feature of the drive.	(3)
5	Ducting, Outlet Top	20-750-DUCT2-F8	1	20-750-DUCT2-F8	2	20-750-DUCT2-F8	3	A duct adaptor is provided to direct exhaust air from the top of the drive. Can be used for horizontal or vertical installations.	(3)
6	Ducting, Bottom Inlet	20-750-DUCT4-F8	1	20-750-DUCT4-F8	2	20-750-DUCT4-F8	3	Provides a duct to direct air flow into the bottom of the cabinet. Requires the Floor/Rail kit to secure the duct.	
7	Control Pod	20-750-POD1-F8	1	20-750-POD1-F8	1	20-750-POD1-F8	1	Control Pod including Main Control Board and Fiber Interface Board. Mount in the left most bay of the drive or remotely (see below).	(2) (4)
	Control POD Remote Harness	20-750-RPD1-F8	1	20-750-RPD1-F8(7)	2	20-750-RPD1-F8(7)	3	Hardware, fiber-optic, and power supply cables to remotely mount the control pod up to 23 m (75 ft) from the drive.	(3)
8	24V Harness	20-750-PH1-F8 (1)	0	20-750-PH2-F9	1	20-750-PH3-F10	1	For Control Pod connection in the drive.	(5)
9	Fiber-optic Cable, 0.6 m (22 in.)	20-750-FCBL1-F8	1					**Important:** Not required if the Remote Mount kit is ordered.	(5) (6)
10	Fiber-optic Cable, 2.8 m (110 in.)			20-750-FCBL1-F10	2	20-750-FCBL1-F10	3		
	Roll-out Cart	20-750-CART1-F8	1	20-750-CART1-F8	1	20-750-CART1-F8	1	A wheeled roll-out cart that facilitates drive installation and removal.	(3)
11	EMC Core	20-750-EMCCM1-F8	1	20-750-EMCCM1-F8	2	20-750-EMCCM1-F8	3	Common mode core kit for inverter section output. For AC Input or Common DC Input drives. EN 61800-3 compliant installations only.	
12	Circuit Breaker	1489-A2D130	1	1489-A2D130	2	1489-A2D130	3	Control Transformer Overload Protection - Required for Common DC Input drives, see page 20.	(2)
	Circuit Breaker Lock	1489-AALOA	1	1489-AALOA	2	1489-AALOA	3		

(1) Frame 8 equivalent 24V DC harness ships with each drive unit.
(2) This kit is required for UL installations.
(3) This kit is recommended.
(4) This kit is required.
(5) Required when mounting control pod in the drive.
(6) 20-750-PH1-F8 and 20-750-FBCL1-F8 are used for a drive mounted control pod. If the control pod is to be remote mounted up to 23m(75ft), order 20-750-RPD1-F8 kit instead.
(7) For frame 9 and 10 installations, remove the two-position connector from the harnesses and combine the leads into one connector that plugs into P14 on the Fiber Interface Board (see page 43).

6

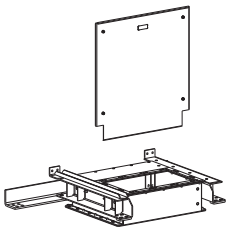

7

8

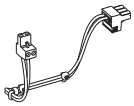

9

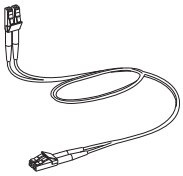

10

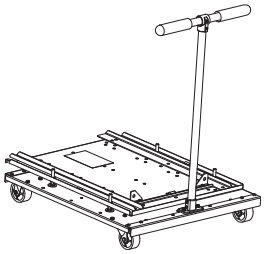

11

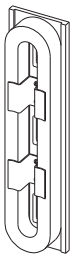

12

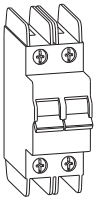

Frame 8

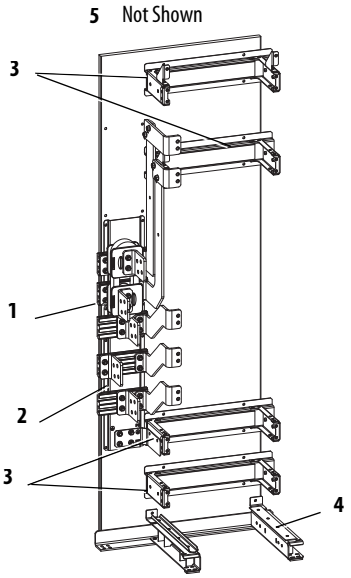

Frame 9

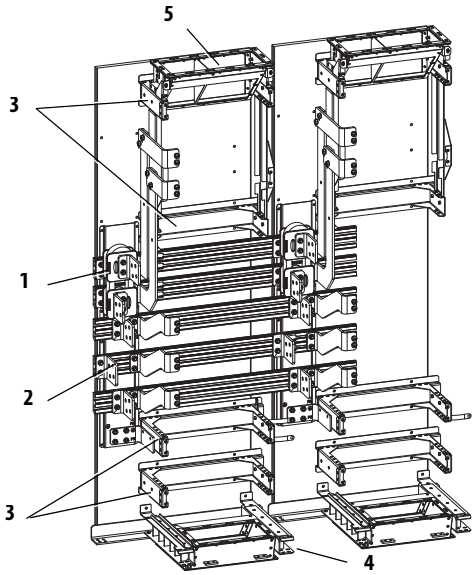

Frame 10

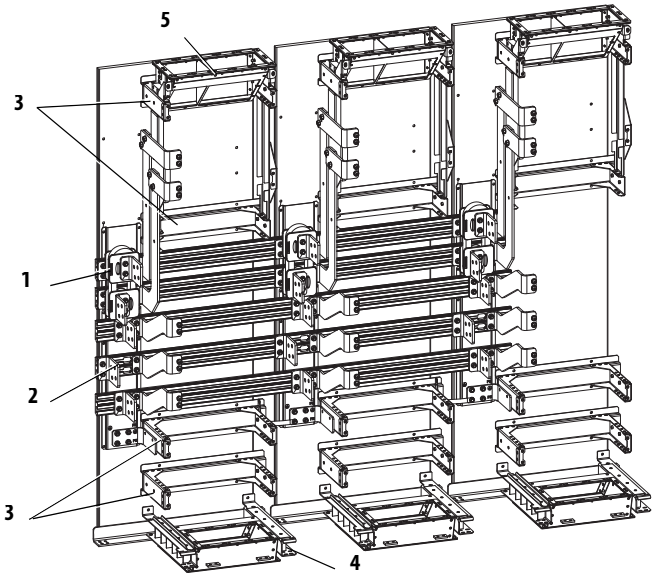

Installation Tools

IMPORTANT Care must be taken to ensure that tools and/or hardware components do not fall into open drive assemblies. Do not energize the drive unless all loose tools and/or hardware components have been removed from the drive assemblies and enclosure.

This list covers the tools needed for drive installation.

Tool Description	Details
ESD-protected place of work	Working surface, Floor covering, seat and ground connections
ESD-protective clothing	Wrist wrap, shoes, overall clothing (coat)
Allen socket wrench	5 mm
Allen socket wrench extension	254 mm (10 in.)
Flat nose screw driver	5 mm (0.19 in.), 6.4 mm (0.25 in.), 9.5 mm (0.375 in.), #1, #2
Hexalobular screw driver/bit	#15, #20, #25, #40, #45
Hexagonal socket wrench	7 mm, 8 mm, 10 mm, 12 mm, 13 mm, 17 mm, 18 mm
Combination wrench	10 mm, 17 mm
Phillips screw driver/bit	#2, 492-C
Pozidriv	#2
Torque wrench	1...12 N•m (8.8…106 lb•in)
Torque wrench	6...50 N•m (53…443 lb•in)
Roll-out cart	20-750-CART1-F8 Note: The roll-out cart is required to remove the drive assembly from the enclosure.

Enclosure Requirements

The following specifications must be met for proper installation.

	Frame 8	Frame 9	Frame 10
Width	800 mm (31.5 in.) min.	1600 mm (63.0 in.) min.	2400 mm (94.5 in.) min.
Depth	600 mm (23.6 in.) min.		
Height	2200 mm (86.6 in.) min.		
Weight	Enclosure must be able to support the total equipment weight stated on page 36.		
Construction	According to EN60439-1		

Bus Bars

ATTENTION: To guard against drive damage, **DO NOT** connect power wires directly to the drive power terminals. Power wiring must be connected to bus bars which are fastened to the drive power terminals.

Power wiring is connected to the drive power terminals (see page 47) using the Field Termination kits shown on page 6 and page 7 or fabricated using material with the following specifications:

- Material: CDA 110 Copper
- Minimum Cross Section: 80.7mm^2 (0.125 in.^{2}) per each 100 A of drive rating.

In addition, the bus bar must be supported as detailed in the figure below.

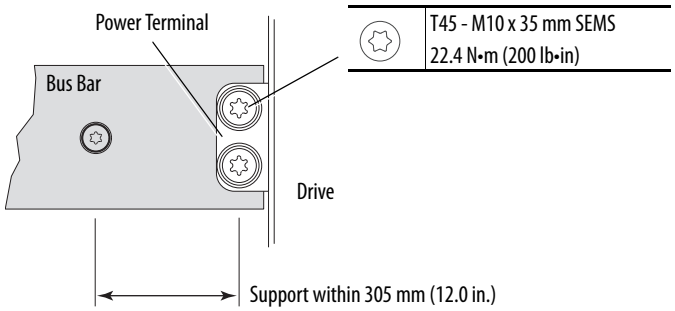

Environmental Requirements

The drive shall be mounted in an enclosure with 40 °C (104 °F) ambient external to the enclosure and surrounding airflow as described on pages 17...20.

See the PowerFlex 750-Series AC Drives Technical Data, publication 750-TD001, for detailed specifications and ratings.

Cooling Airflow and Ventilation - IP20, NEMA Type 1 Enclosures

ATTENTION: To guard against equipment damage caused by excessive heat, proper airflow must be maintained at all times. See the guidelines on the following pages.

The PowerFlex 755 drive is designed for a dual airflow system consisting of drive power cooling and enclosure cooling. The drive blower generates a high velocity airflow for the drive power cooling through a duct network that also serves as the frame of an open type drive. The enclosure cooling requirements must be supplied as specified.

When mounting the drive vertically, the enclosure door must be provided with openings for air intake as shown. To achieve sufficient cooling inside the enclosure, the dimensions for total area and location of incoming airflow provided in Figure 1 should be followed. Horizontal mounting details for single drive units can be found on page 26.

The cooling arrangements inside the enclosure must be such that they prevent hot output air from mixing with the incoming fresh air.

Heat Dissipation

Frame	Enclosure Cooling	Drive Power Cooling	Total (if drive is fully enclosed)
8	2000 Watts	8200 Watts	10,200 Watts
9	4000 Watts	16,400 Watts	20,400 Watts
10	6000 Watts	24,600 Watts	30,600 Watts

Figure 1 - Dual Airflow System

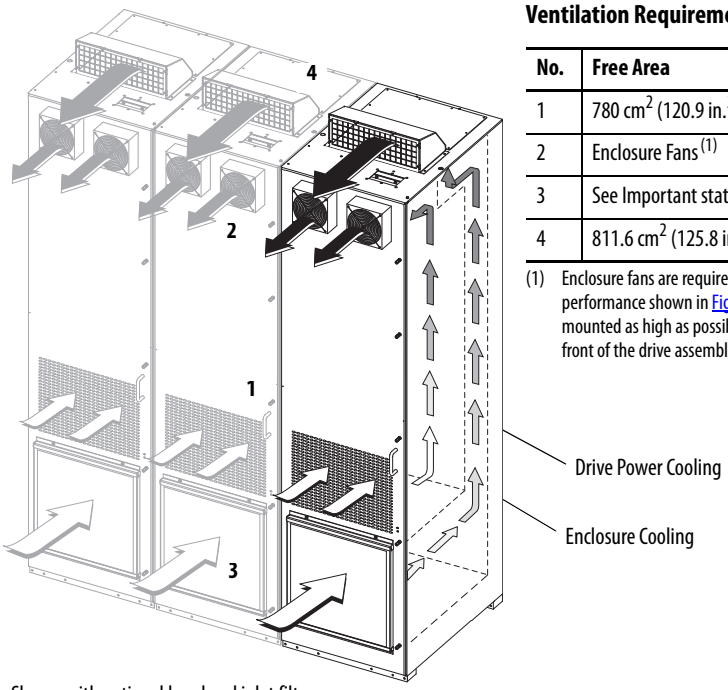

Shown with optional hood and inlet filter.

Ventilation Requirements

No.	Free Area	Description
1	780 cm^2 (120.9 $in.^2$)	Enclosure Cooling
2	Enclosure Fans (1)	
3	See Important statement below	Drive Power Cooling
4	811.6 cm^2 (125.8 $in.^2$)	

(1) Enclosure fans are required and must meet or exceed the performance shown in Figure 5. In addition, the fans should be mounted as high as possible on the door and aligned with the front of the drive assembly.

IMPORTANT For vertical mounting applications a duct section must be fabricated to fit between the gasket on the drive and the inside of the enclosure door. Depending on the enclosure used, the drive mounting location in the enclosure (set-back) can range between 12.7…54.5 mm (0.50…2.13 in.). To assure sufficient Control Pod access, the maximum set-back of the drive behind the door is 54.5 mm (2.13 in.). The duct must contact and slightly compress the gasket to seal the drive power cooling air from the enclosure cooling air. Reference the dimensions provided in Figure 2.

Figure 2 - Intake Duct Details

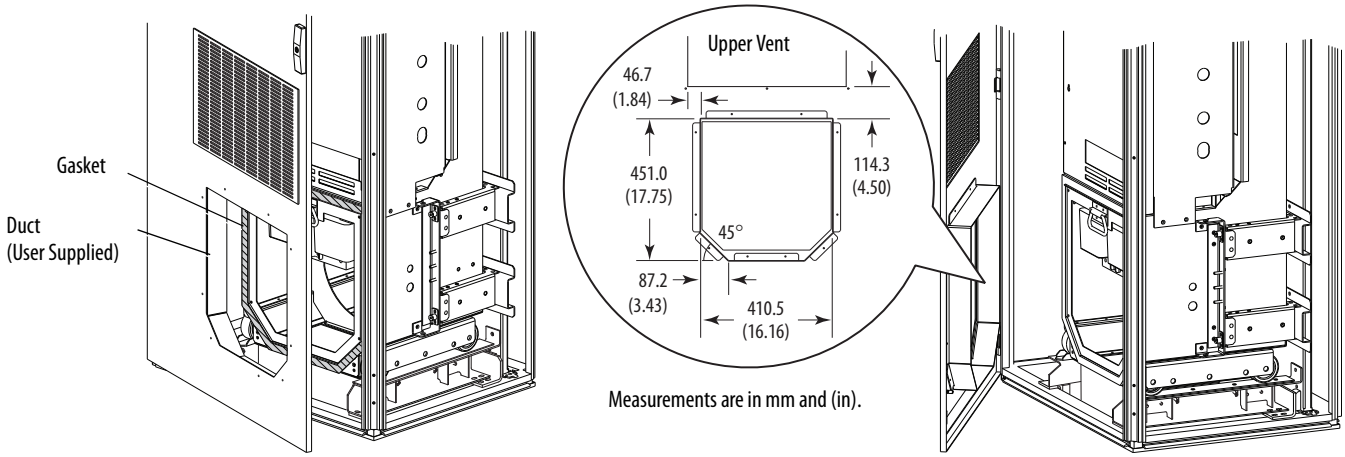

Measurements are in mm and (in).

Filter not shown for clarity.

Duct must contact gasket when door is closed.

Figure 3 - Outlet Ducting Kit (20-750-DUCT2-F8) Details

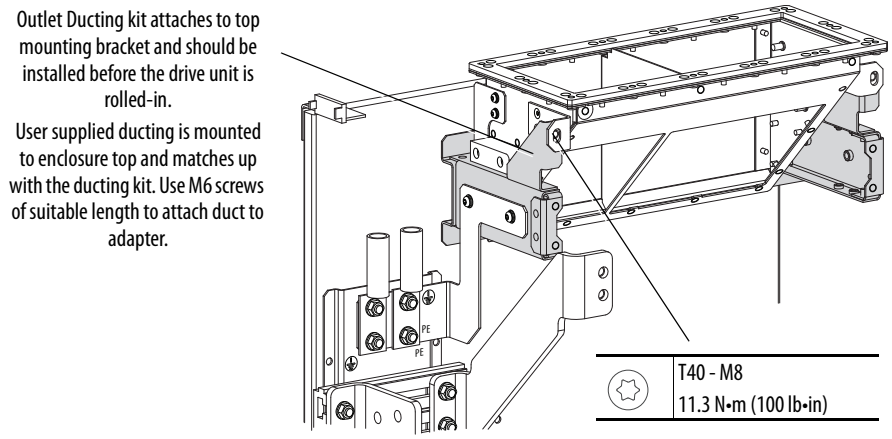

Figure 4 - Outlet Ducting Kit (20-750-DUCT2-F8) Dimensions

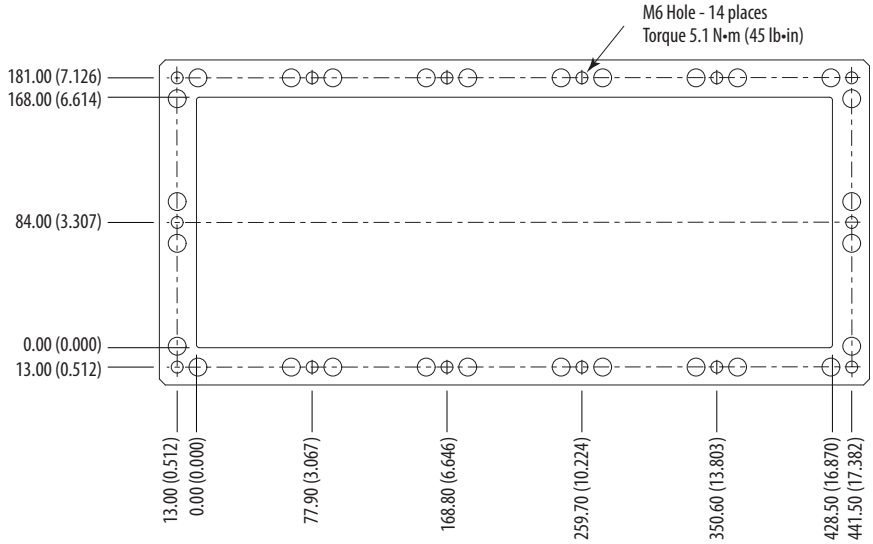

Enclosure Fans

Enclosure fans are required and must meet or exceed the performance shown in Figure 5 for two fans operating at 10.76 CMM (380 CFM) each with 1.27 mm (0.05 in.) H_2O static pressure.

Figure 5 - Fan Performance (per bay)

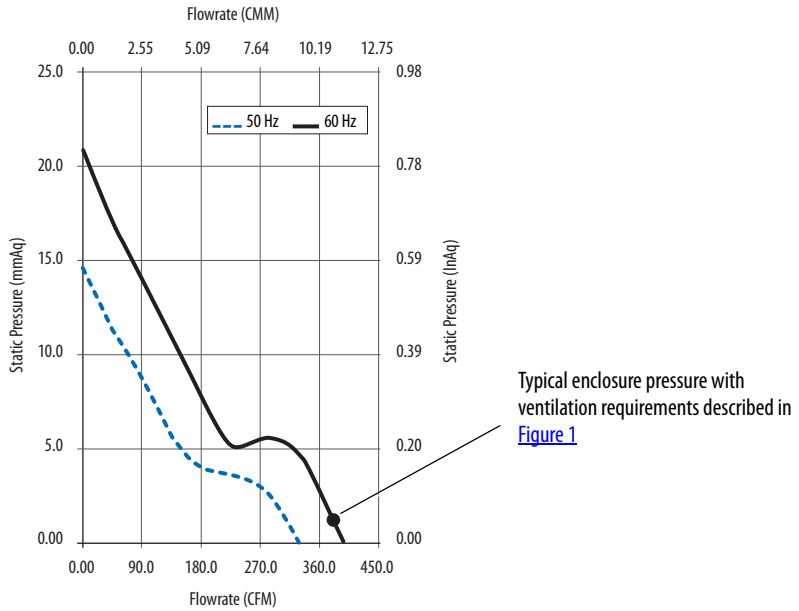

The enclosure fans can be powered from the Control Transformer which is located in the upper part of the drive assembly. The transformer supplies 230V AC (±10%) power to the drive and drive blower with sufficient power available (240 VA/bay) for the enclosure fans. The terminating point for the enclosure fans is at terminal block TB2 on the right side of the drive assembly (see Figure 6).

- Recommended wire is 1.3 mm^2 (16 AWG) tinned copper stranded conductor, PVC insulated, 600V, 105 °C (221 °F).
- Recommended Connector; Phoenix P/N 1757019, 5.08 mm (.2 in.) pitch, 2 position, 12A, 250V, 24...12 AWG.

To gain access to the Control Transformer, see the PowerFlex 755 AC Drives Hardware Service Manual, publication 750-TG001. To select or verify transformer primary voltage, see page 41.

For Common DC Input drives, the user must provide:

1. Electrical power to the drive for the enclosure fans, and
2. overload protection for the drive control transformer. The overload device must be suitable for 120/240V AC, 50/60 Hz, 8.3/4.2 A, 1 kVA.

   Allen-Bradley circuit breaker catalog number 1489-A2D130 is acceptable. A circuit breaker lock (1489-AALOA) is also available.

For additional information, see the PowerFlex 750-Series AC Drives Installation Instructions, publication 750-IN001. See the section "120V/240V AC Power Supply Connections - Common DC Input Drives."

ATTENTION: To avoid an electric shock hazard when servicing the drive, a means for Lockout/Tagout of an external 120/240V power source must be provided. Locking and tagging the common bus precharge disconnect switch alone does not provide sufficient protection when servicing the drive.

Figure 6 - Terminal Block for Enclosure Fans - TB2

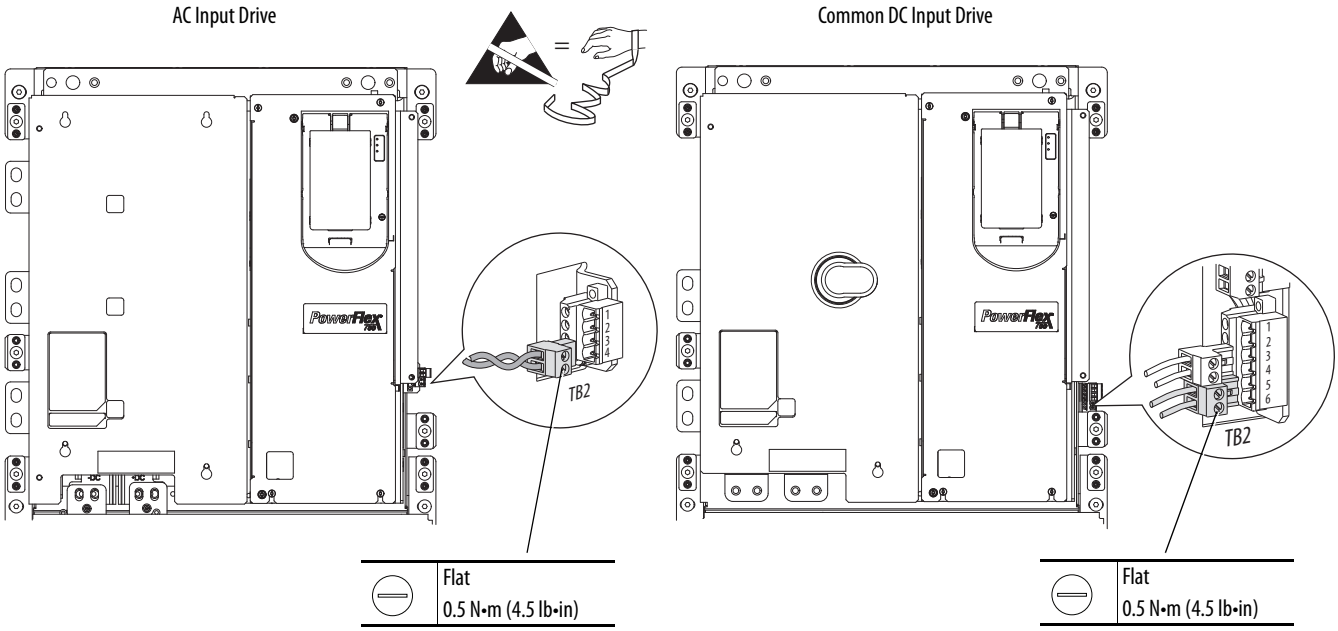

TB2 Terminal Designations

Drive	Terminal	Name	Description	Strip Length
AC Input Drive	1	Shunt Trip Com.	Do Not Use	–
	2	Shunt Trip N.O.		
	3	Fan	240V AC, 240 VA for enclosure fans	7.0 ±0.5 mm (0.28 ±0.02 in.)
	4	Fan		
Common DC Input Drive	1	120V UPS Control Power Input	Do Not Use	–
	2			
	3	120/240V Control Power Input	Control Power (user supplied) - 120/240V AC, 50/60 Hz, 8.3/4.2 A, 1 kVA	7.0 ±0.5 mm (0.28 ±0.02 in.) (1)
	4			
	5	Fan	240V AC, 240 VA for enclosure fans	7.0 ±0.5 mm (0.28 ±0.02 in.) (2)
	6	Fan		

(1) See page 59 for control and I/O wire recommendations.
(2) See page 20 for wire recommendations.

Drive Grounding

A PE termination point is supplied with the Inverter (AC Output) and Converter (AC Input) termination kits shown on page 6 and page 7. Mounting/drilling recommendations are provided on page 39 and page 40.

The PE termination point must be connected to an external ground at the installation site according to local regulations. Connect a grounding cable from the drive assembly to a grounding location shown in Figure 7. Grounding cable must be copper.

Common DC input kits are not compliant with EN 61800-5-1.

Figure 7 - Drive Grounding

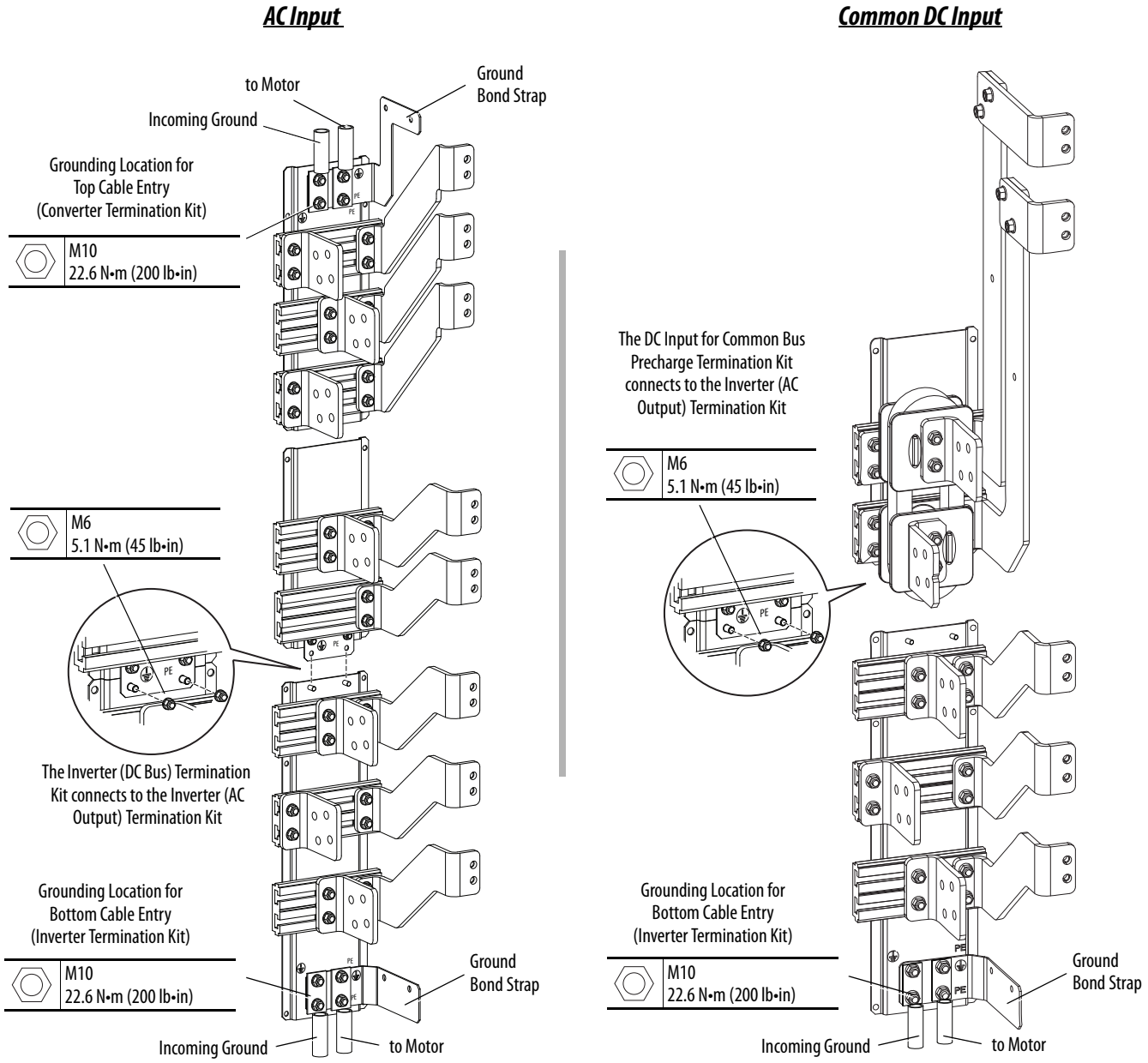

CE Conformity

IMPORTANT Additional palm safe shield(s) are required for operator safety and CE conformance.

Compliance with the Low Voltage Directive and Electromagnetic Compatibility Directive has been demonstrated using harmonized European Norm (EN) standards published in the Official Journal of the European Communities. PowerFlex 750-Series drives comply with the EN standards listed below when installed according to this document.

CE Declarations of Conformity are available online at: www.rockwellautomation.com/products/certification/

Low Voltage Directive (2014/35/EU)

- EN 61800-5-1 Adjustable speed electrical power drive systems – Part 5-1: Safety requirements – Electrical, thermal and energy.

EMC Directive (2014/30/EU)

- EN 61800-3 Adjustable speed electrical power drive systems – Part 3: EMC product standard including specific test methods.

General Considerations

- For CE compliance, drives must satisfy installation requirements related to both EN 61800-5-1 and EN 61800-3 provided in this document.
- PowerFlex 750-Series AC Drives comply with the EMC requirements of EN 61800-3 when installed according to good EMC practices and the instructions provided in this document. However, many factors can influence the EMC compliance of an entire machine or installation, and compliance of the drive itself does not ensure compliance of all applications.
- PowerFlex 750-Series drives are not intended to be used on public low-voltage networks which supply domestic premises. Without additional mitigation, radio frequency interference is expected if used on such a network. The installer is responsible to take measures such as supplementary line filters and enclosures to prevent interference, in addition to the installation requirements of this document.
- Requirements for supplementary mitigation related to specific high frequency emission limits are provided in Table 1 on page 25.

- PowerFlex 750-Series drives generate harmonic current emissions on the AC supply system. When operated on a public low-voltage network it is the responsibility of the installer or user to ensure that applicable requirements of the distribution network operator have been met. Consultation with the network operator and Rockwell Automation may be necessary.

ATTENTION: PowerFlex 750-Series drives produce DC current in the protective earthing conductor which may reduce the ability of RCD's (residual current-operated protective devices) or RCM's (residual current-operated monitoring devices) of type A or AC to provide protection for other equipment in the installation.

Installation Requirements Related to EN 61800-5-1 and the Low Voltage Directive

- Voltage classes up to 690V PowerFlex 750-Series drives are compliant with the CE LV Directive when used on a "corner-earthed" supply system as well as all other common supply systems for altitudes up to and including 2000 m (6562 ft.).
- When used at altitudes above 2000 m (6562 ft) up to a maximum of 4800 m (15,748 ft), PowerFlex 750-Series drives of voltage classes up to 480V may not be powered from a "corner-earthed" supply system in order to maintain compliance with the CE LV Directive. Altitude derating curves are provided in the PowerFlex 750-Series AC Drives Technical Data, publication 750-TD001.
- NEMA/UL Open Type drives must be installed in a supplementary enclosure to be CE compliant with respect to protection against electrical shock.
- PowerFlex 750-Series drives produce leakage current in the protective earthing conductor which exceeds 3.5 mA AC and/or 10 mA DC. The minimum size of the protective earthing (grounding) conductor used in the application must comply with local safety regulations for high protective earthing conductor current equipment.

Installation Requirements Related to EN 61800-3 and the EMC Directive

- The drive must be earthed (grounded) as described on page 45.
- Output power wiring to the motor must employ cable with a braided shield providing 75% or greater coverage, or the cables must be housed in metal conduit, or equivalent shielding must be provided. Continuous shielding must be provided from the drive enclosure to the motor enclosure. Both ends of the motor cable shield (or conduit) must terminate with a low-impedance connection to earth.
- At the drive end of the motor cable, terminate the shield at the PE Grounding Bar.
- At the motor end, the motor cable shield or conduit must terminate in a shielded connector which must be properly installed in an earthed motor wiring box attached to the motor. The motor wiring box cover must be installed and earthed.

- All control (I/O) and signal wiring to the drive must use cable with a braided shield providing 75% or greater coverage, or the cables must be housed in metal conduit, or equivalent shielding must be provided. When shielded cable is used, only the drive end of the cable shield should be terminated with a low-impedance connection to earth. The cable shield may be terminated either by using a shielded connector in conjunction with a conduit plate or conduit box, or the shield may be clamped to an "EMC plate."
- Motor cabling must be separated from control and signal wiring wherever possible.
- Maximum motor cable length must not exceed the maximum length indicated in Table 1 for compliance with radio frequency emission limits for the specific standard and installation environment.
- EMC cores must be applied to input power and motor cabling for some models of the PowerFlex 750-Series drives as indicated in Table 1.
- The drive must be powered from an earthed supply system such as a TN or TT system and the PE-A and PE-B jumpers in the drive must be installed. See the Drive Power Jumper Configuration in the PowerFlex 750-Series AC Drives Installation Instructions, publication 750-IN001.
- IP00 and NEMA/UL Open Type drives must be installed in suitable supplementary EMC enclosures to achieve compliance with EN 61800-3.

Table 1 - PowerFlex 750-Series RF Emission Compliance and Installation Requirements

	Standard / Limits			
Drive Frame Catalog Number	**EN61800-3 Category C1 EN61000-6-3 CISPR11 Group 1 Class B**	**EN61800-3 Category C2 EN61000-6-4 CISPR11 Group 1 Class A (input power ≤ 20 kVA)**	**EN61800-3 Category C3 (I ≤ 100 A) CISPR11 Group 1 Class A (Input power > 20 kVA)**	**EN61800-3 Category C3 I > 100 A**
Frame 8 - AC Input	Compliance possible with supplementary mitigation (Consult factory)	Compliance possible with supplementary mitigation (Consult factory)	30 m motor cable limit (1) with output core. (2)	30 m motor cable limit (1) with output core. (2)
Frame 9 - AC Input	Compliance possible with supplementary mitigation (Consult factory)	Compliance possible with supplementary mitigation (Consult factory)	30 m motor cable limit (1) with output core(2) and input core.(3)	30 m motor cable limit (1) with output core(2) and input core.(3)
Frame 10 - AC Input	Compliance possible with supplementary mitigation (Consult factory)	Compliance possible with supplementary mitigation (Consult factory)	30 m motor cable limit (1) with output core(2) and input core.(3) Door shielding kit installed.	30 m motor cable limit (1) with output core(2) and input core.(3) Door shielding kit installed.
Frames 8…9 - Common DC Input	Compliance possible with supplementary mitigation (Consult factory)	Compliance possible with supplementary mitigation (Consult factory)	30 m motor cable limit (1) with output core(2) and input core.(4)	30 m motor cable limit (1) with output core(2) and input core.(4)
Frame 10 - Common DC Input	Compliance possible with supplementary mitigation (Consult factory)	Compliance possible with supplementary mitigation (Consult factory)	30 m motor cable limit (1) with output core(2) and input core.(4) Door shielding kit installed.	30 m motor cable limit (1) with output core(2) and input core.(3) Door shielding kit installed.
	More Stringent Limits ←		→	Less Stringent Limits

(1) Intended to be powered from an industrial power network supplied by a dedicated power transformer or generator and not from LV power lines supplying other customers.
(2) EMC kit number 20-750-EMCCM1-F8. Kit contains one core. Each drive assembly requires one EMC kit. Order one kit for a Frame 8 drive, two kits for a Frame 9 drive, three kits for a Frame 10 drive.
(3) EMC kit number 20-750-EMCCM1-F9. Kit contains one core. Each drive assembly requires one EMC kit. Order two kits for a Frame 9 drive, three kits for a Frame 10 drive.
(4) EMC kit number 20-750-CBPEMCCM1-F8 is included with the termination kit.

Horizontal Mounting Guidelines – Single Drive Unit Only

To guard against sub-panel flexing, support pieces should be added to the underside of the panel along each long edge.

Figure 8 - Open Style Drive - Horizontal Installation

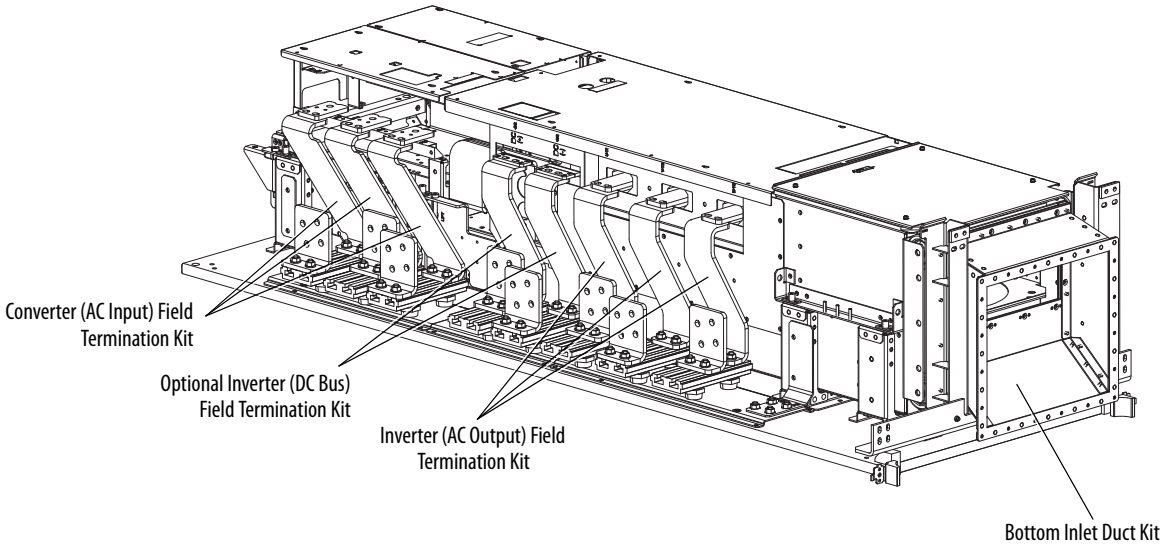

Figure 9 - Bottom Inlet Ducting Kit Dimensions

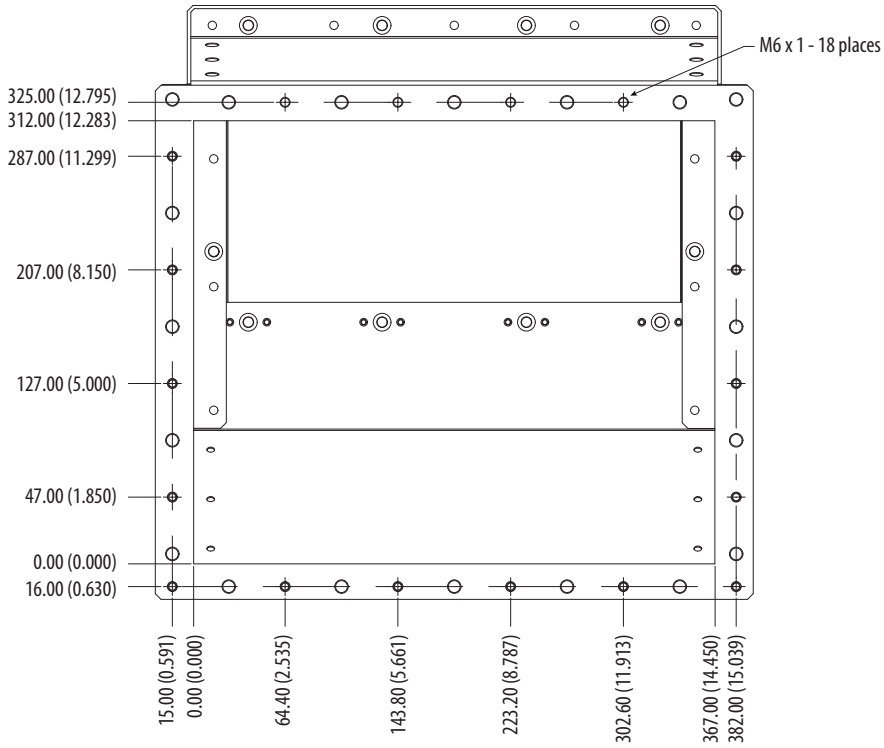

Derating Guidelines for Horizontal Mounting - Three-Phase Input/Output, Frame 8 Only

Catalog Code	Light Duty					Normal Duty					Heavy Duty				
	50/60 Hz Input		Output			50/60 Hz Input		Output			50/60 Hz Input		Output		
	Volts	Amps	Volts	Amps	Power	Volts	Amps	Volts	Amps	Power	Volts	Amps	Volts	Amps	Power
380…400V AC Three-Phase Input, 2 kHz Carrier Frequency															
C460	400	450	0…400	439	200 kW	400	450	0…400	439	200 kW	400	321	0…400	313	160 kW
C540	400	488	0…400	475	224 kW	400	488	0…400	475	224 kW	400	381	0…400	371	200 kW
C567	400	511	0…400	497	250 kW	400	511	0…400	497	250 kW	400	394	0…400	384	200 kW
C650	400	625	0…400	609	315 kW	400	625	0…400	609	315 kW	400	450	0…400	439	224 kW
C750	400	665	0…400	647	355 kW	400	665	0…400	647	355 kW	400	488	0…400	475	250 kW
C770	400	694	0…400	676	355 kW	400	694	0…400	676	355 kW	400	536	0…400	522	300 kW
480V AC Three-Phase Input, 2 kHz Carrier Frequency															
D430	480	387	0…460	394	300 Hp	480	387	0…460	394	300 Hp	480	295	0…460	301	200 Hp
D485	480	435	0…460	443	350 Hp	480	435	0…460	443	350 Hp	480	330	0…460	336	250 Hp
D545	480	470	0…460	479	400 Hp	480	470	0…460	479	400 Hp	480	362	0…460	369	250 Hp
D617	480	567	0…460	577	450 Hp	480	567	0…460	577	450 Hp	480	387	0…460	394	300 Hp
D710	480	610	0…460	622	500 Hp	480	610	0…460	622	500 Hp	480	435	0…460	443	350 Hp
D740	480	639	0…460	650	550 Hp	480	639	0…460	650	550 Hp	480	492	0…460	501	400 Hp
600V AC Three-Phase Input, 2 kHz Carrier Frequency															
E295	600	272	0…600	288	250 Hp	600	272	0…600	288	250 Hp	600	208	0…600	220	200 Hp
E355	600	302	0…600	320	300 Hp	600	302	0…600	320	300 Hp	600	226	0…600	239	200 Hp
E395	600	332	0…600	352	350 Hp	600	332	0…600	352	350 Hp	600	251	0…600	266	250 Hp
E435	600	352	0…600	373	350 Hp	600	352	0…600	373	350 Hp	600	272	0…600	288	250 Hp
E460	600	390	0…600	413	400 Hp	600	390	0…600	413	400 Hp	600	302	0…600	320	300 Hp
E510	600	416	0…600	441	450 Hp	600	416	0…600	441	450 Hp	600	325	0…600	344	350 Hp
690V AC Three-Phase Input, 2 kHz Carrier Frequency															
F265	690	252	0…690	267	250 kW	690	252	0…690	267	250 kW	690	164	0…690	174	186 kW
F330	690	283	0…690	300	300 kW	690	283	0…690	300	300 kW	690	203	0…690	215	200 kW
F370	690	313	0…690	332	335 kW	690	313	0…690	332	335 kW	690	235	0…690	249	250 kW
F415	690	351	0…690	373	375 kW	690	351	0…690	373	375 kW	690	283	0…690	300	300 kW
F460	690	382	0…690	405	400 kW	690	382	0…690	405	400 kW	690	286	0…690	304	315 kW
F500	690	404	0…690	429	425 kW	690	404	0…690	429	425 kW	690	316	0…690	335	350 kW

Dimensions

Figure 10 - Drive Unit Dimensions - AC Input

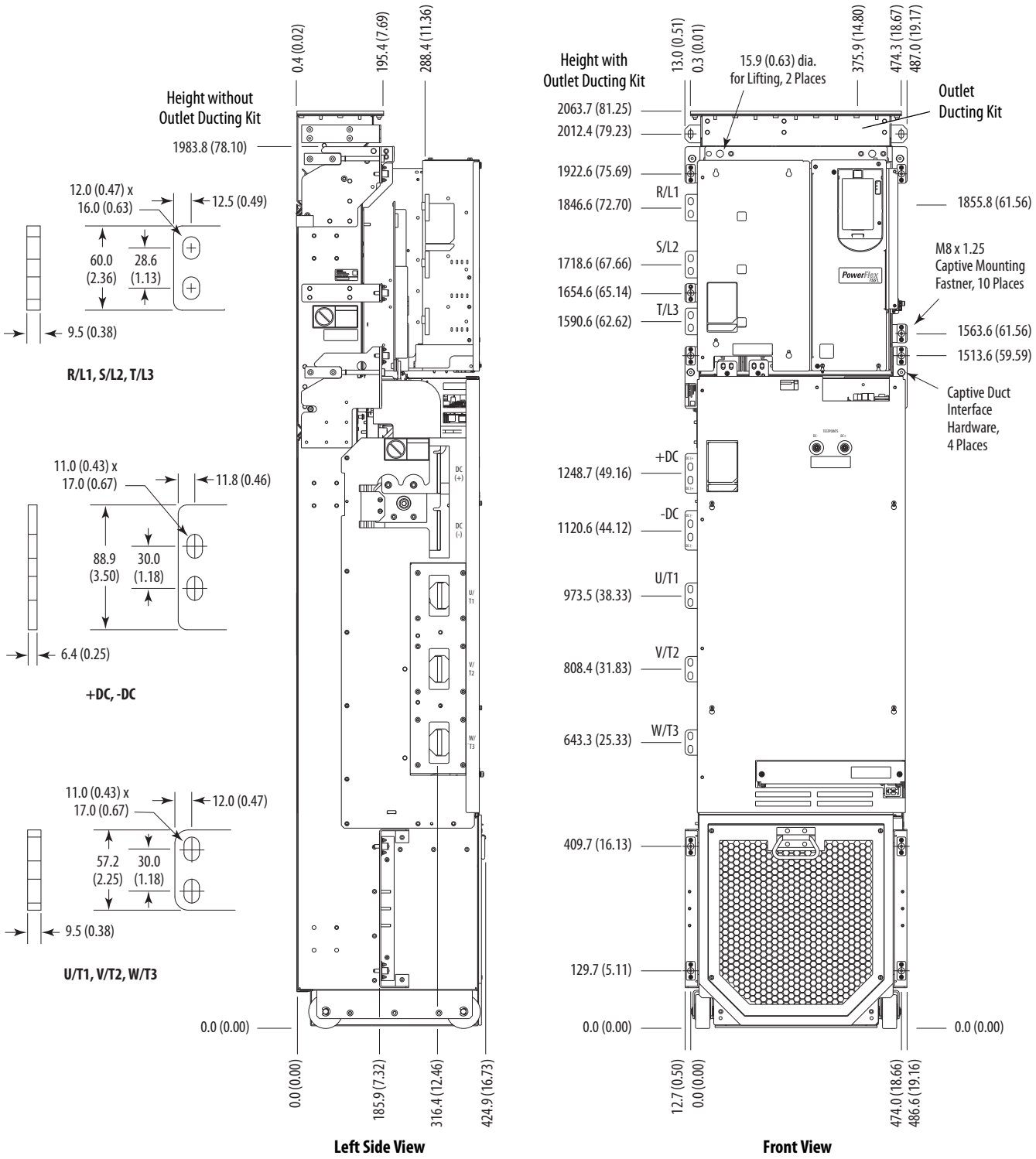

Dimensions are in millimeters and (inches)

Figure 11 - Drive Unit Dimensions – Common DC Input

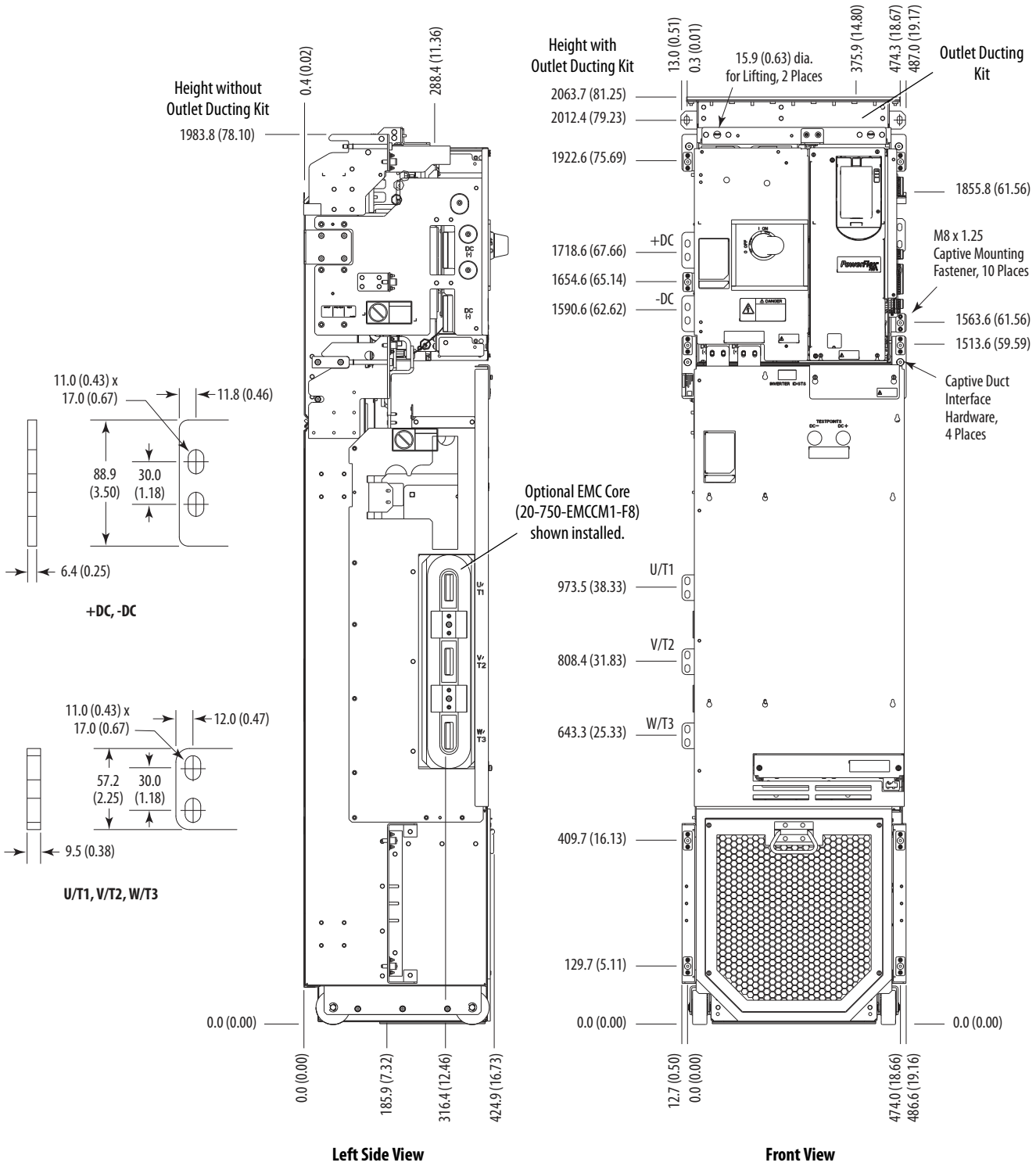

Dimensions are in millimeters and (inches)

Figure 12 - Overall Dimensions with Mounting and Termination Kits – Frame 8 AC Input

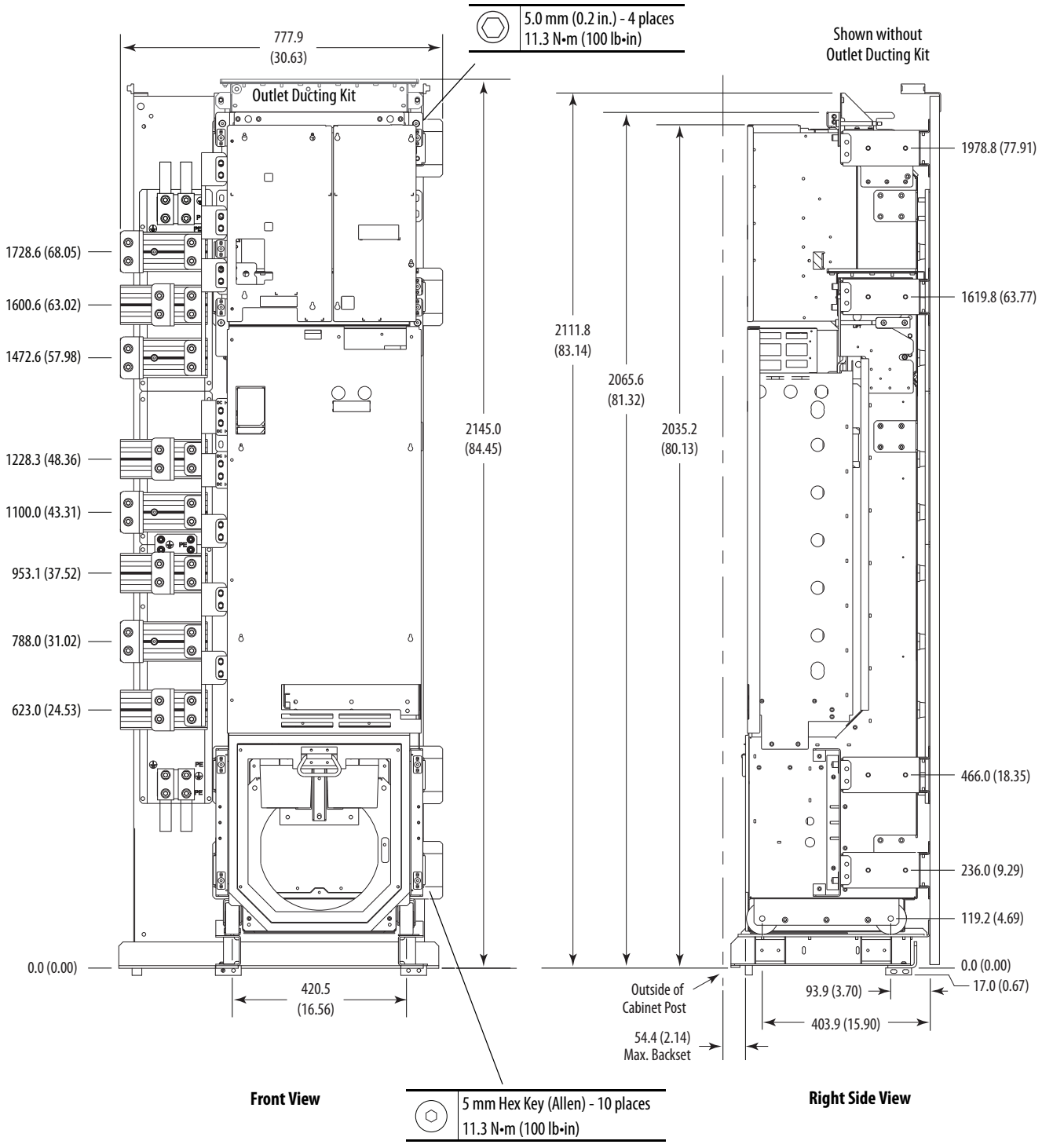

Dimensions are in millimeters and (inches)

Figure 13 - Overall Dimensions with Mounting and Termination Kits – Frame 8 Common DC Input

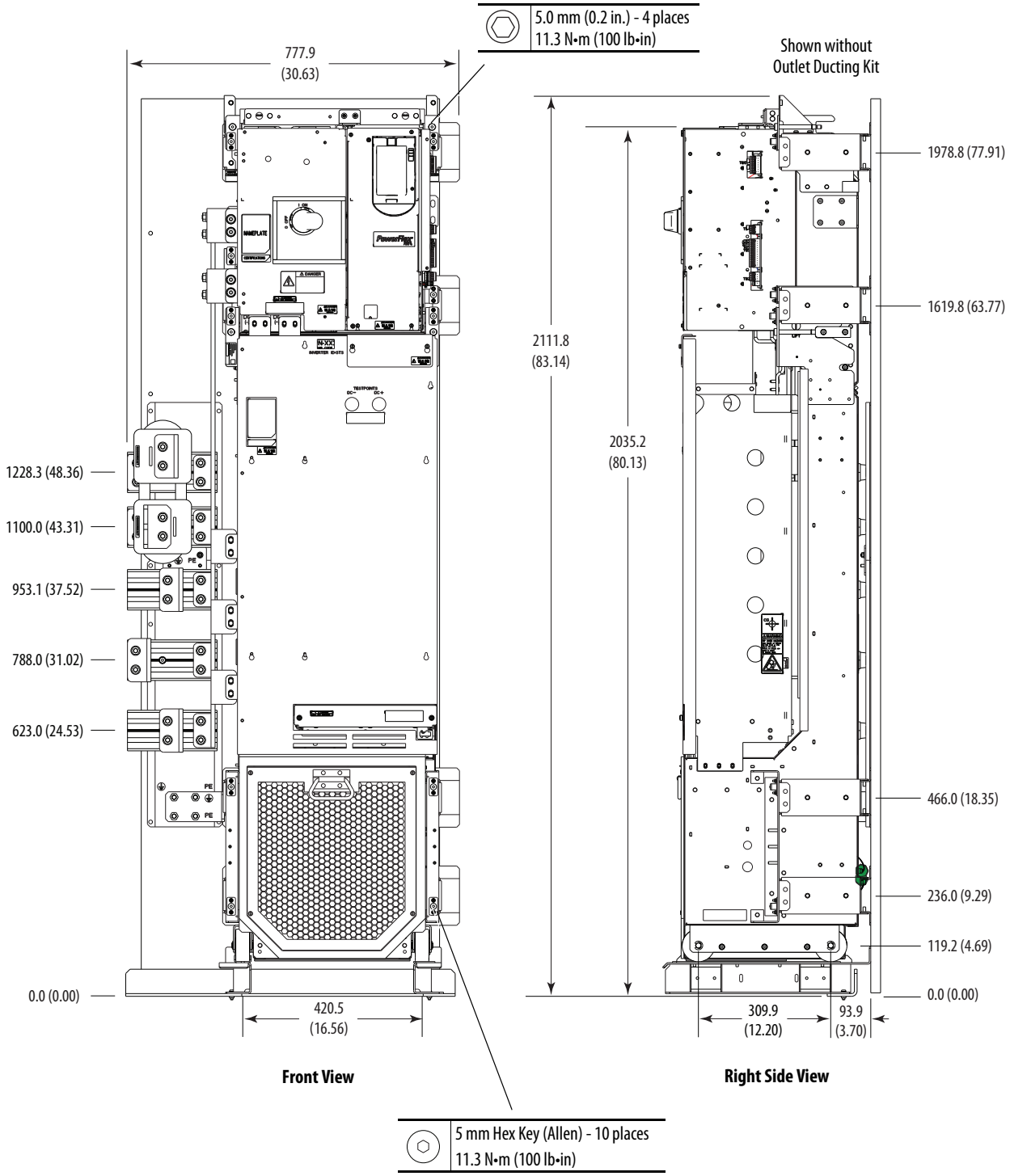

Dimensions are in millimeters and (inches)

Figure 14 - Overall Dimensions with Mounting and Termination Kits – Frame 9 AC Input

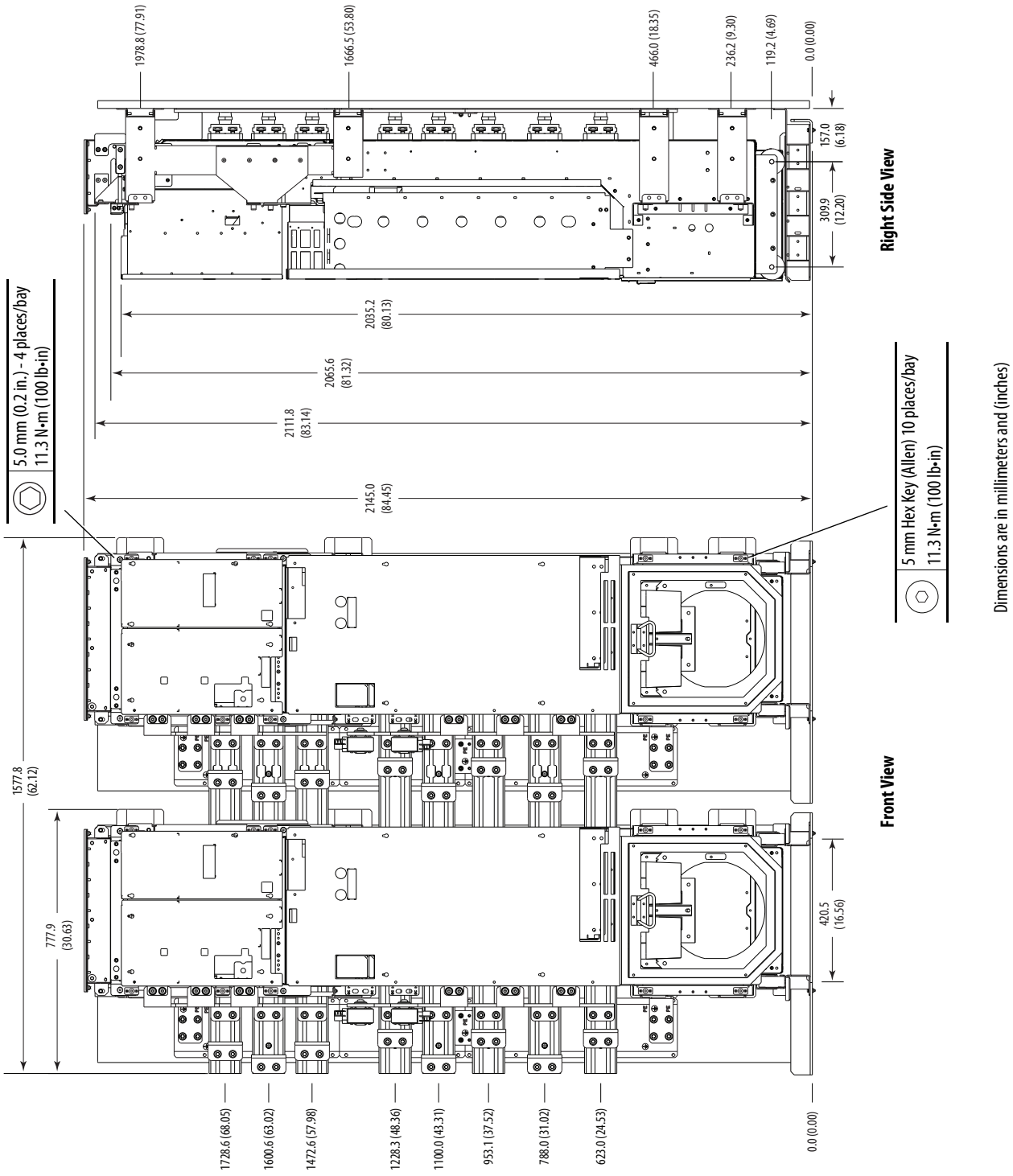

Figure 15 - Overall Dimensions with Mounting and Termination Kits – Frame 9 Common DC Input

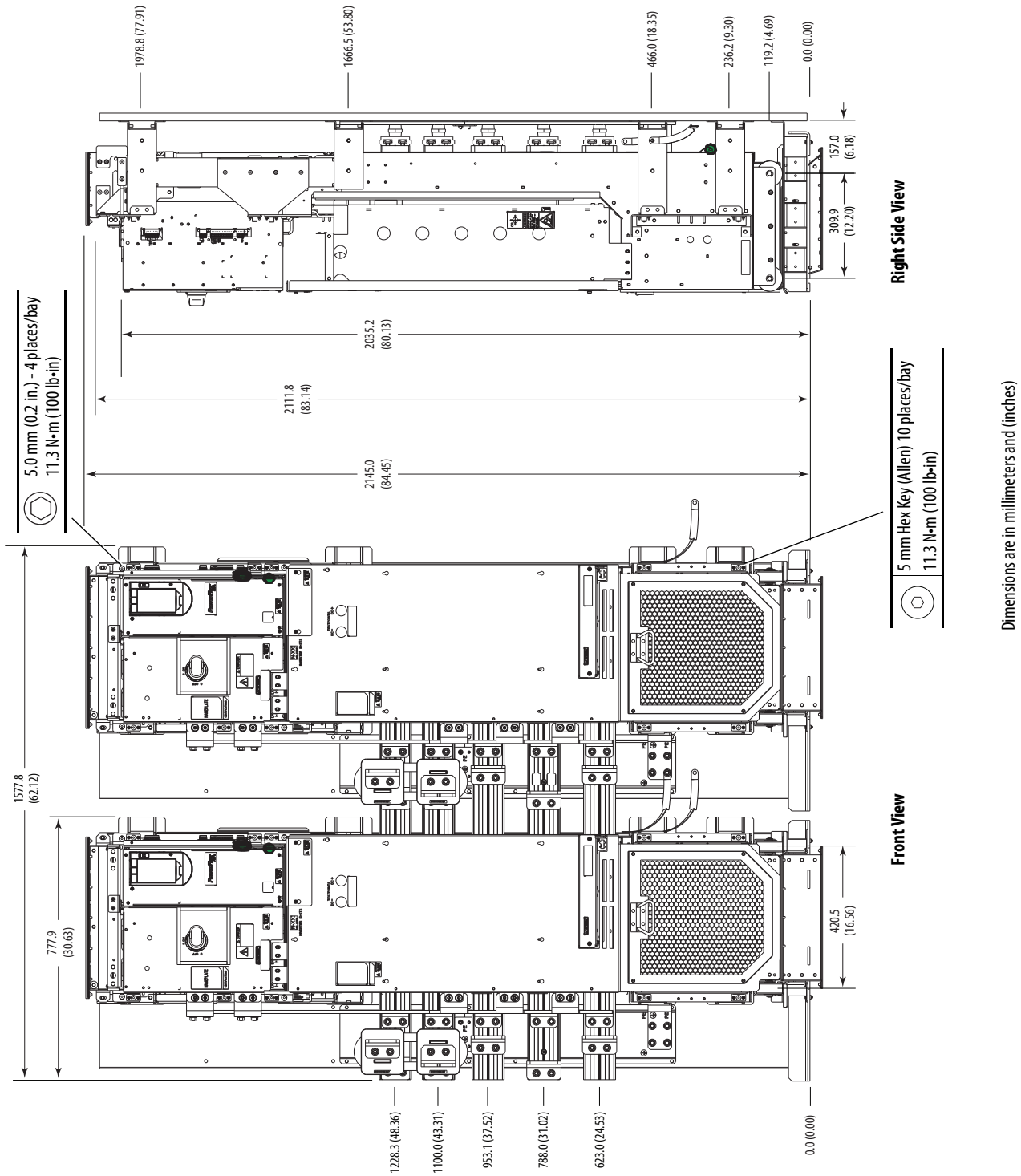

Figure 16 - Overall Dimensions with Mounting and Termination Kits – Frame 10 AC Input

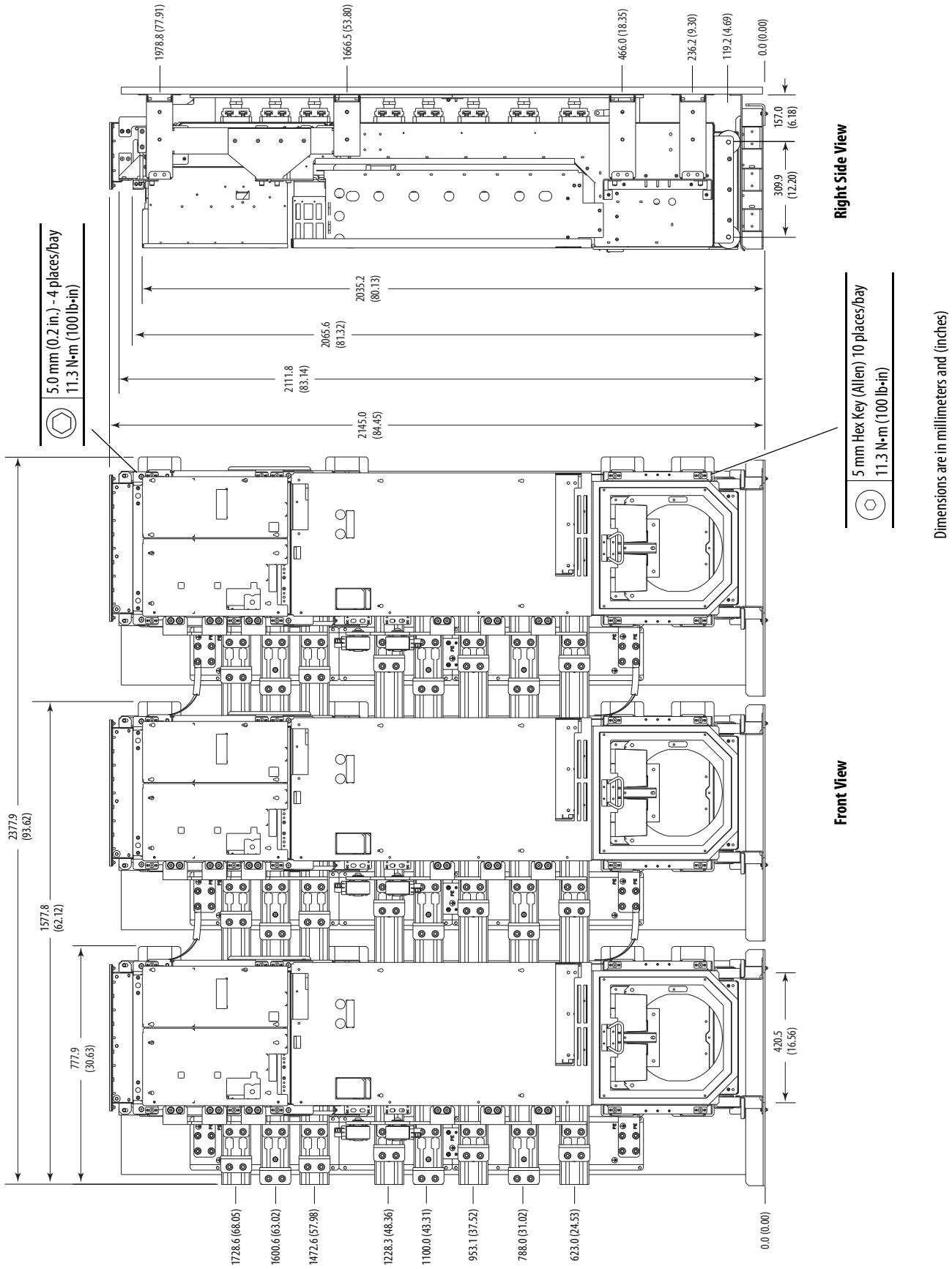

Figure 17 - Overall Dimensions with Mounting and Termination Kits – Frame 10 Common DC Input

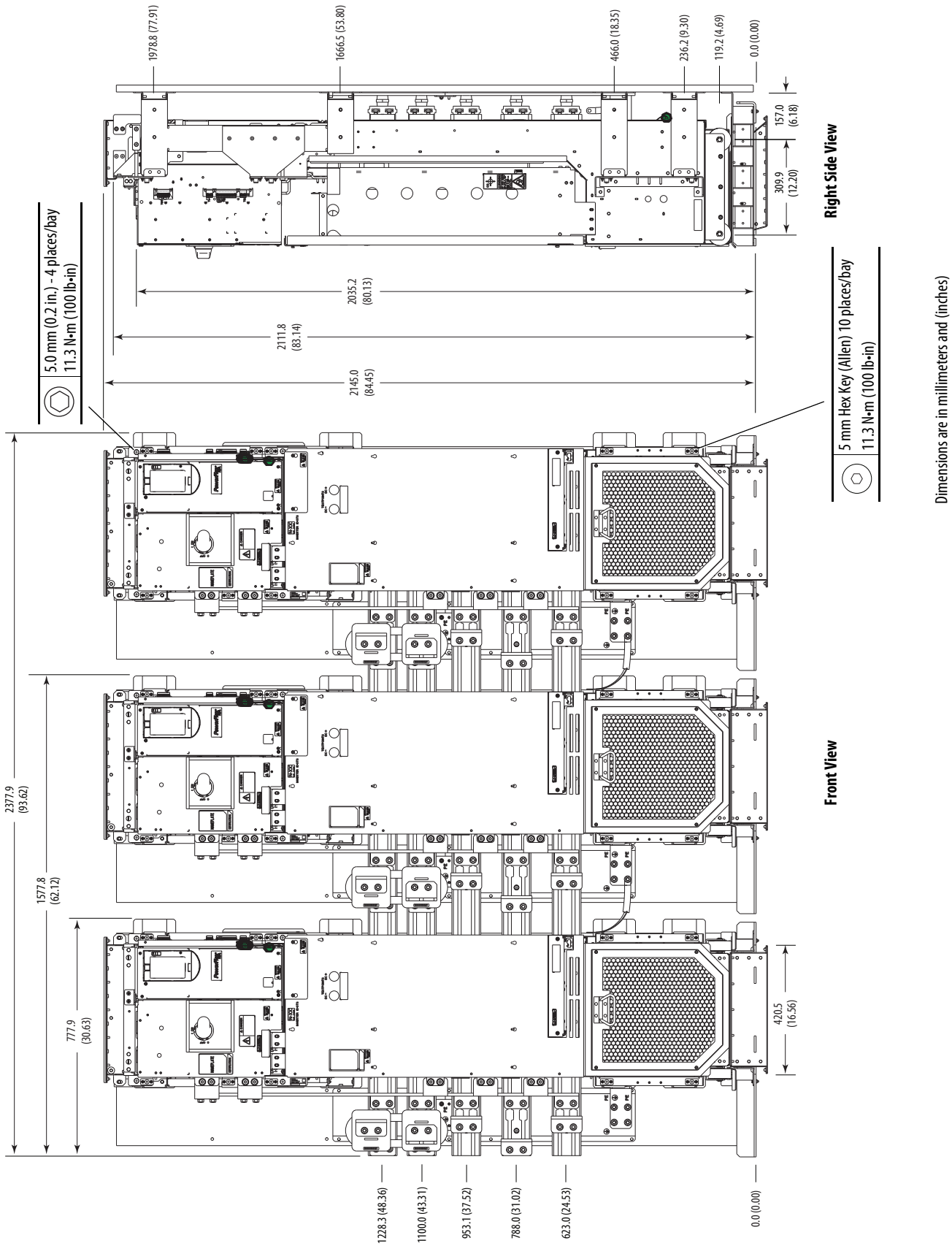

Lifting

IMPORTANT Consult the enclosure manufacturers documentation for proper enclosure lifting procedures.

ATTENTION: To guard against possible personal injury and/or equipment damage:

- Inspect all lifting hardware for proper attachment before lifting drive or enclosure.
- Do not allow any part of the drive, enclosure or lifting mechanism to make contact with electrically charged conductors or components.
- Do not subject the drive or enclosure to high rates of acceleration or deceleration while transporting to the mounting location or when lifting.
- Do not allow personnel or their limbs directly underneath the drive or enclosure when it is being lifted and mounted.

The approximate maximum drive component weights are listed below.

	Weight *kg (lb)*	
Component	**AC Input**	**Common DC Input**
Pod	5 (10)	5 (10)
Converter/DC Input with Precharge	64 (140)	64 (140)
Inverter	222 (490)	165 (363)
Drive Assembly (Open, IP00)	286 (630)	229 (504)

Vertical Lifting

Attach Lifting Hardware

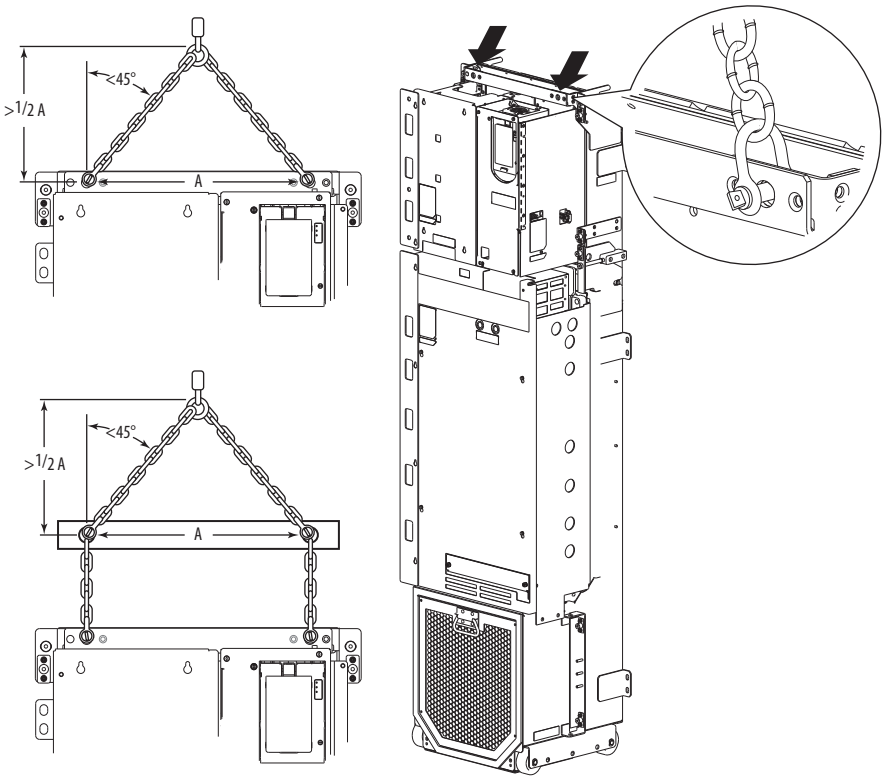

Moving the Drive Assembly to a Vertical Position

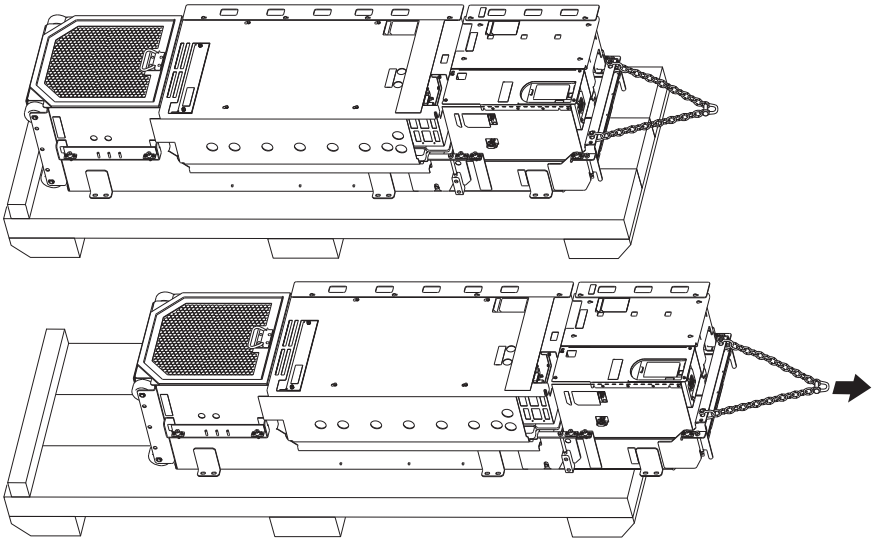

IMPORTANT	When approaching the full upright (vertical) position, be aware of the wheels at the bottom of the drive assembly. Blocking the wheels may be necessary to guard against undesired movement.

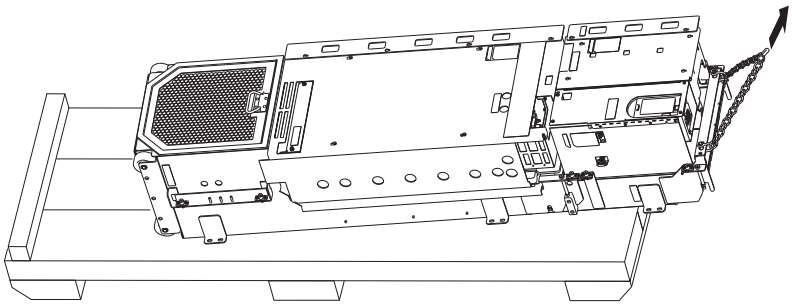

IMPORTANT	Remove shipping brackets prior to installation.

Horizontal Lifting

Recommended Lifting Bar (User Supplied)

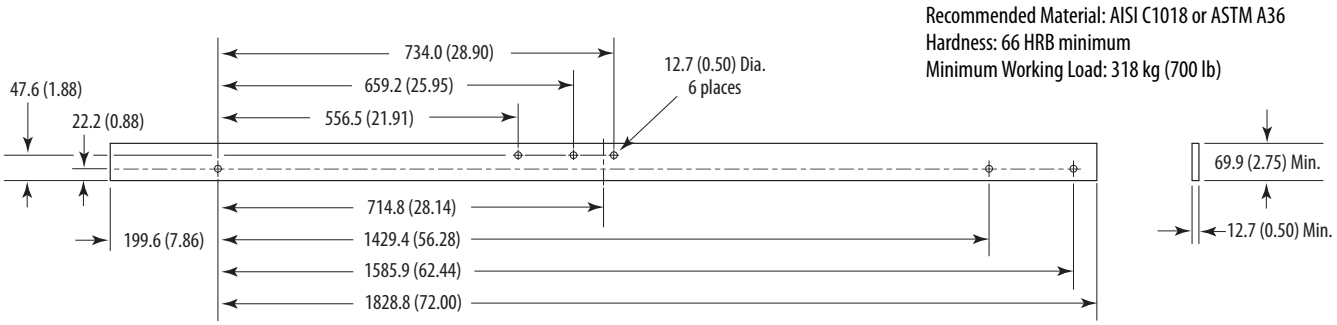

Lifting Hardware

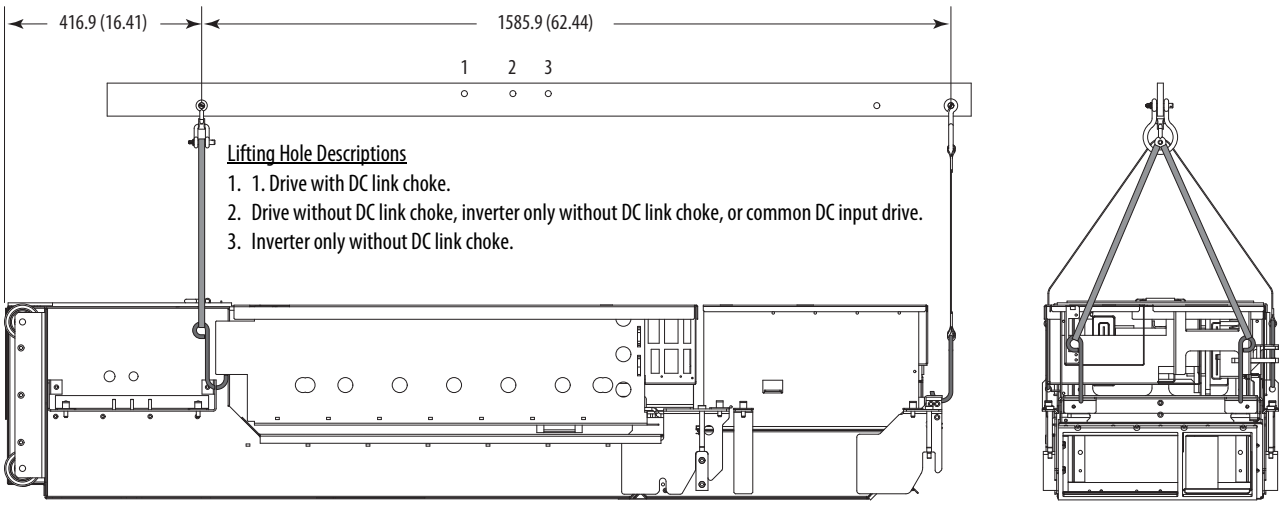

Drive Installation

Preparing the Enclosure

ATTENTION: To guard against personal injury and/or equipment damage, ensure that the enclosure and drive assembly is properly supported to prevent tipping.

To facilitate ease of service, it is recommended that the drive assembly be mounted on support rails such as the Floor/Rail kit described on page 10 or page 14. Fasten rails to the enclosure at distances shown on page 39 or page 40. For proper internal cooling airflow, a minimum mounting clearance of 51 mm (2.0 in.) to the side walls is required.

The drive assembly should be secured to the rear of the enclosure or full size control panel using the Mounting kit described on page 10 or page 14. Recommended placement and dimensions for the kit are provided on page 39 or page 40. Brackets are supplied on the drive assembly for attaching the Mounting kit components. The Mounting kit is required to prevent mechanical damage to the power terminals.

Figure 18 - Frame 8 Drilling Dimensions

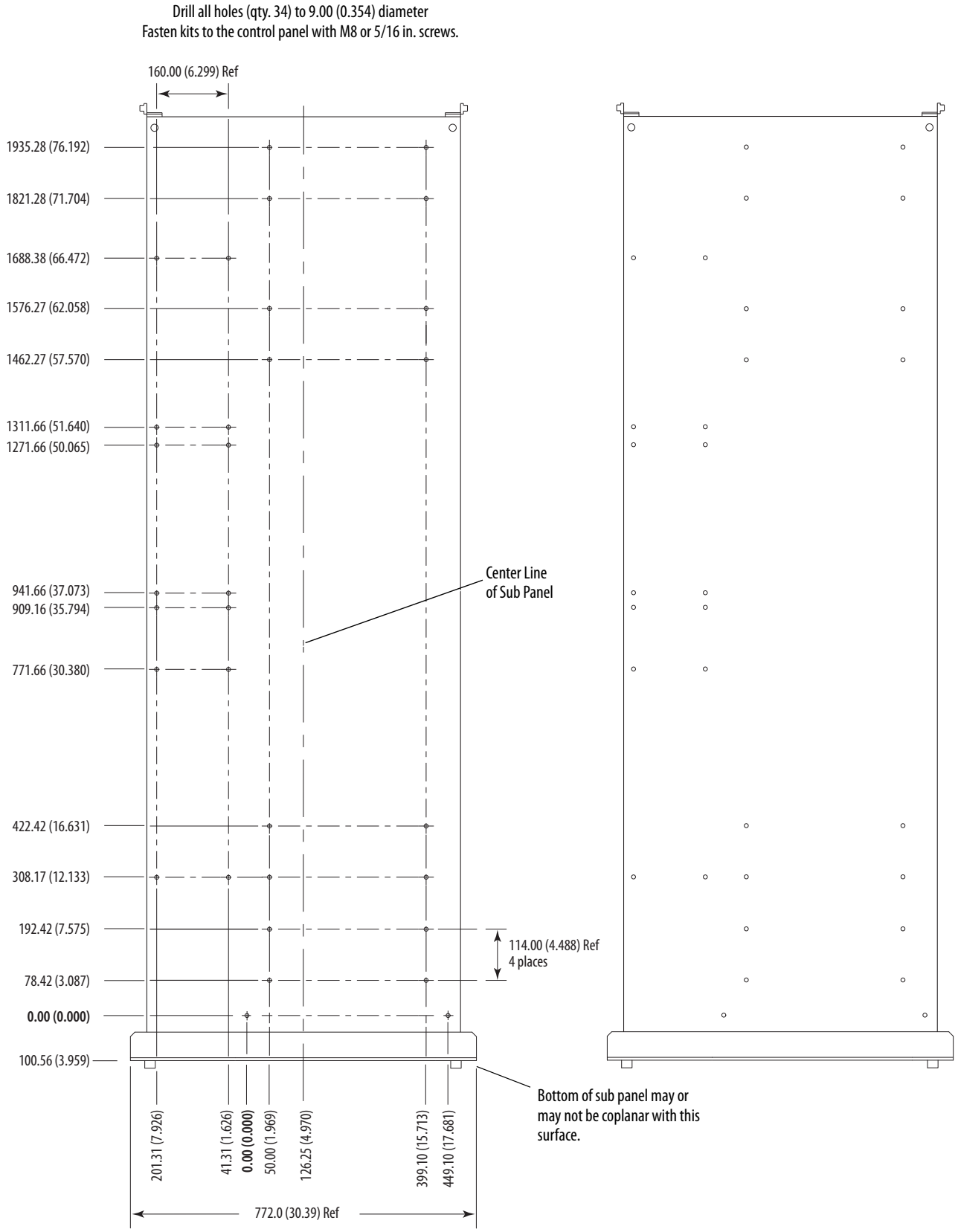

Dimensions are in millimeters and (inches)

Figure 19 - Frame 9 and 10 Drilling Dimensions

Drill all holes (qty. 34) to 9.00 (0.354) diameter
Fasten kits to the control panel with M8 or 5/16 in. screws.

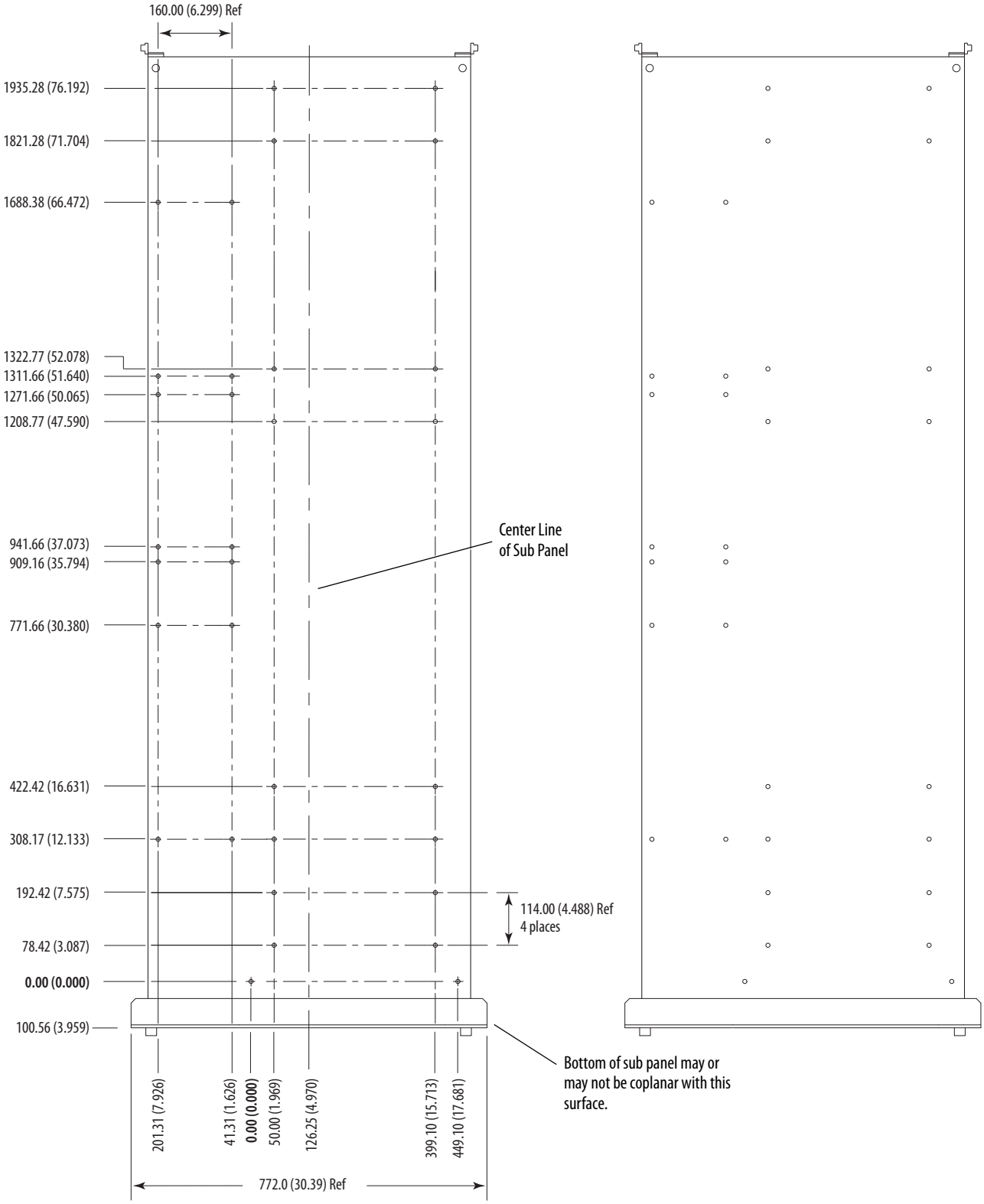

Dimensions are in millimeters and (inches)

Selecting/Verifying Control Transformer Voltage

The control transformer is located inside the upper right part of the drive assembly and is typically set to match the input line voltage. The control transformer provides the single-phase 240V internal control voltage, power for the drive blower, and the enclosure fans. If the line voltage is different than the voltage class specified on the drive nameplate, it may be necessary to change transformer taps. To gain access to the transformer, see the PowerFlex 755 AC Drives Hardware Service Manual, publication 750-TG001.

	P2 1.8 N•m (16 lb•in)

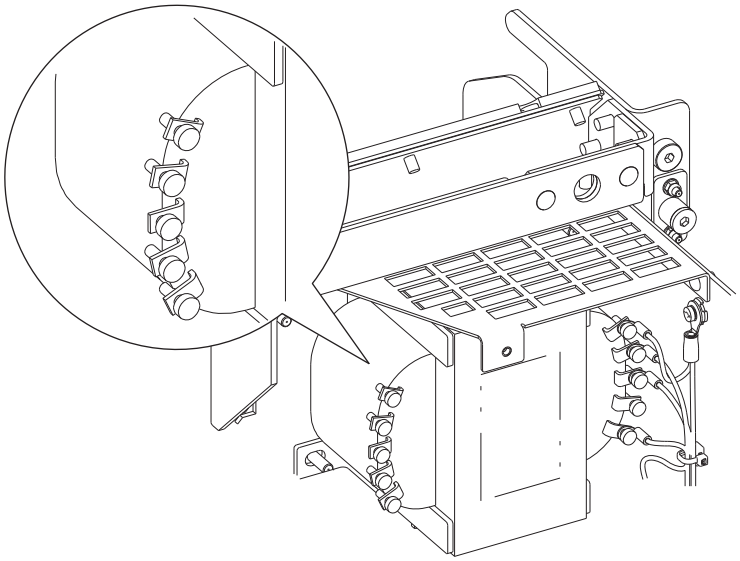

AC Input Drive

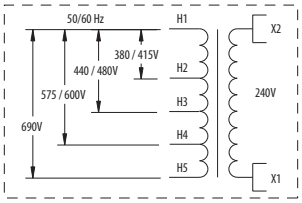

Common DC Input Drive

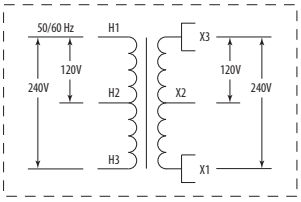

Installing the Control Pod in the Drive

The following steps will guide you through installation of the Control Pod in the drive. To mount the pod in a remote location up to 23 m (75 ft) from the drive, order the Remote Mount kit (catalog number 20-750-RPD1-F8).

1. Loosen, but do not remove, the bottom two M4 x 12 mm slotted hexalobular screws that secure the control pod cover to the assembly.
2. Remove the top two M4 x 12 mm slotted hexalobular screws that secure the cover to the assembly and remove the cover.

	T20 or F - 6.4 mm (0.25 in.) 1.8 N•m (16 lb•in)

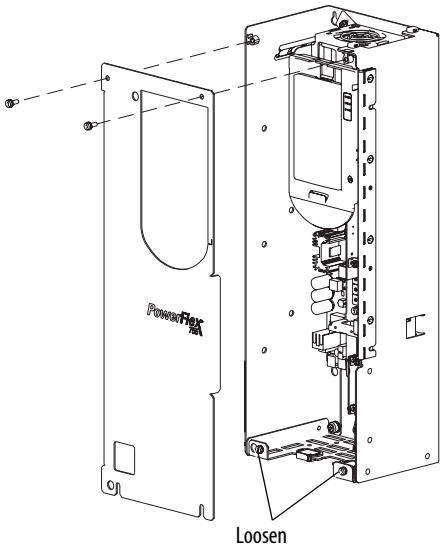

3. Secure the Control Pod hinge to the converter control panel right side wall with four M4 x 12 mm screws.

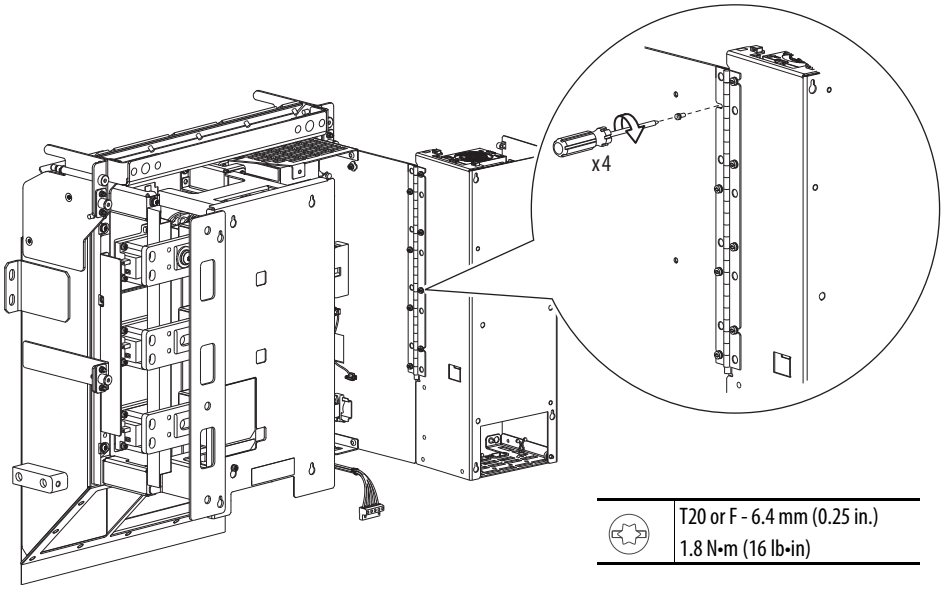

	T20 or F - 6.4 mm (0.25 in.) 1.8 N•m (16 lb•in)

4. Swing the Control Pod into the converter assembly and tighten the captive screws on the back panel.

	T20 or F - 6.4 mm (0.25 in.) 1.8 N•m (16 lb•in)

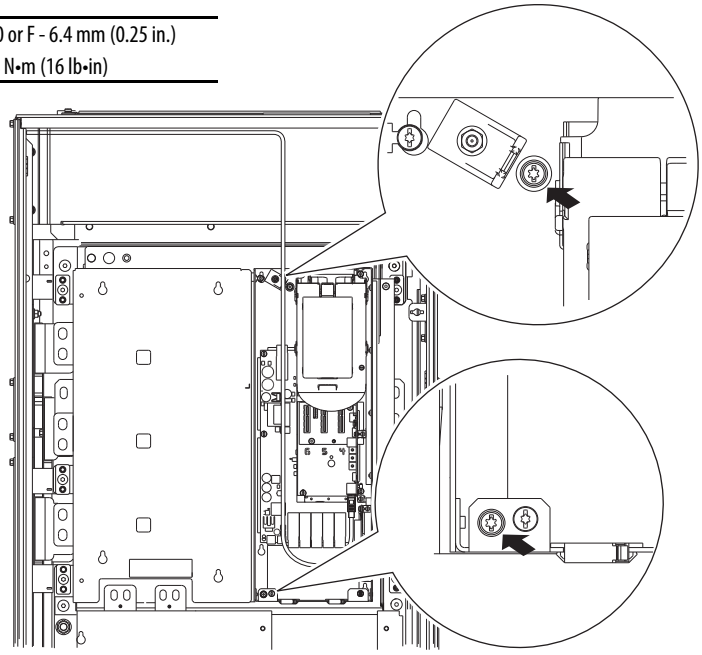

5. Insert the two position connector of the single-bay 24V wire harness into terminal P14 on the Fiber Interface Board.
6. Connect one end the fiber-optic cable to P1 (INV1) on the Fiber Interface Board.

IMPORTANT Minimum inside bend radius for fiber-optic cable is 50 mm (2 in.). Any bends with a shorter inside radius can permanently damage the fiber-optic cable. Signal attenuation increases as inside bend radius is decreased.

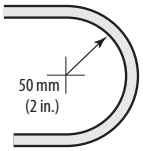

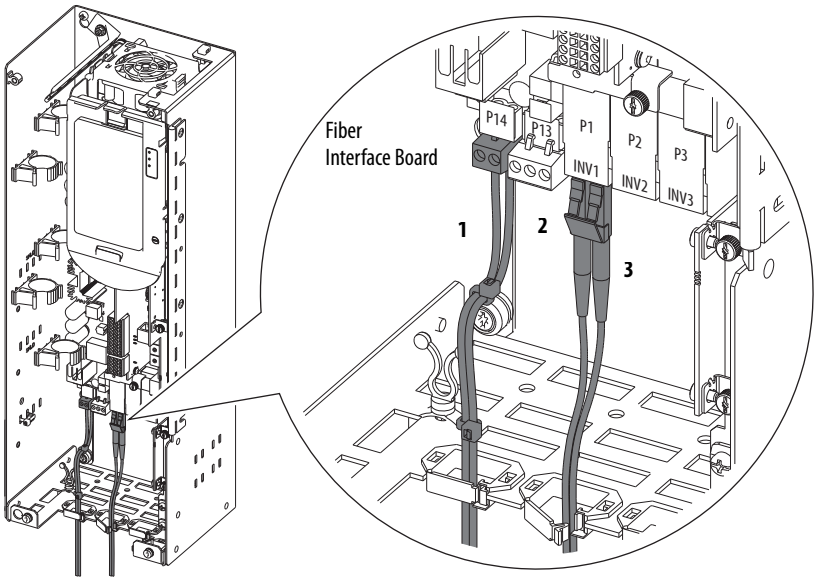

Fiber Interface Board Connections

No.	Name	Description
1	Internal 24V Power Connection	Connects between P14 and TB1
2	Optional 24V Connection	User supplied External 24V Power Source (see below)
3	Inverter Fiber-optic Connection	Fiber-optic cable between P1 (fiber-optic transceiver INV1) and Power Layer Interface Board

7. Insert the other end of the 24V wire harness into the converter terminal block TB1, mounted on the converter control panel right side wall.

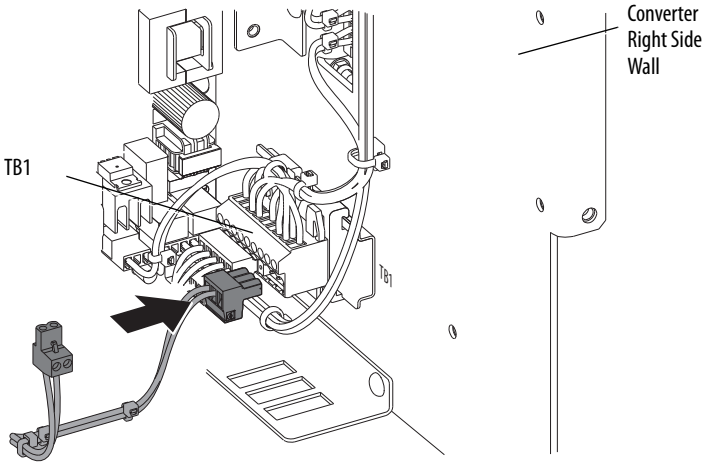

8. Connect the other end of the fiber cable to INV on the Power Layer Interface Board in the inverter card cage. Excess cable length can be coiled on the bottom of the Control Pod.

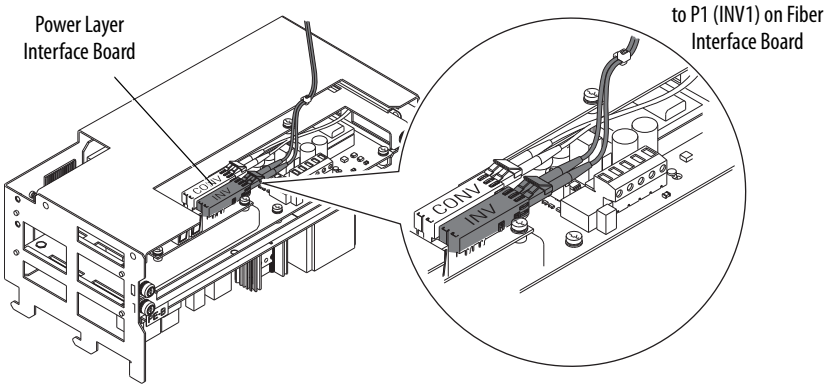

9. Replace the Control Pod Cover.

Optional External Power Supply

An external power source supplies control power to the drive when the drive is not energized. Connect an optional external 24V power supply to P13 using the three position connector supplied. See External Power Supply Connections on the next page.

External Power Supply Connections

Power Block	Terminal	Name	Description
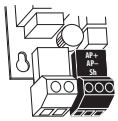	AP+	+24 Volt Auxiliary Power	Connections for user supplied power supply: 24V DC ±10%, 5 A, PELV (Protective Extra Low Voltage) or SELV (Safety Extra Low Voltage)
	AP–	Auxiliary Power Common	
	Sh	Shield	Terminating point for wire shields.

Power Wiring

Grounding Requirements

The drive Safety Ground-PE must be connected to system ground. Ground impedance must conform to the requirements of national and local industrial safety regulations and/or electrical codes. The integrity of all ground connections should be periodically checked.

Recommended Grounding Scheme

A single point (PE only) grounding scheme should be used. Some applications may require alternate grounding schemes, see Wiring and Grounding Guidelines for Pulse-width Modulated (PWM) AC Drives, publication DRIVES-IN001, for more information. These applications include installations with long distances between drives or drive line-ups, which could cause large potential differences between the drive or line-up grounds.

For installations within an enclosure, a single safety ground point or ground bus bar connected directly to building steel should be used. All circuits including the AC input ground conductor should be grounded independently and directly to this point/bar.

Typical Grounding

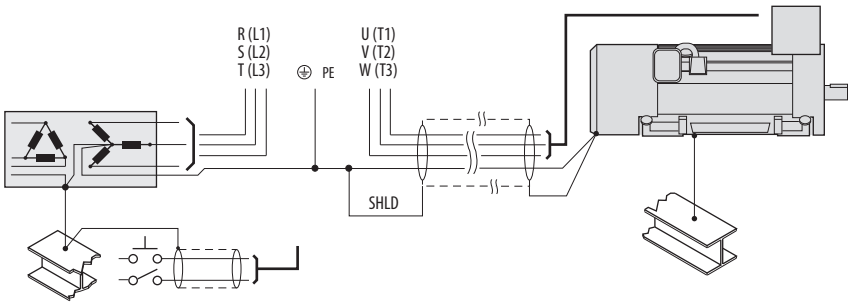

Shield Termination - SHLD

The Shield terminal provides a grounding point for the motor cable shield. It must be connected to an earth ground by a separate continuous lead. The **motor cable** shield should be connected to this terminal on the drive (drive end) and the motor frame (motor end). Use a shield terminating or EMI clamp to connect shield to this terminal.

Wire Recommendations

Type		Description	Min. Insulation Rating
Power (1)(2)	Standard	• Four tinned copper conductors with XLPE insulation. • Copper braid/aluminum foil combination shield and tinned copper drain wire. • PVC jacket.	600V, 75 °C (167 °F)

(1) Control and signal wires should be separated from power wires by at least 0.3 meters (1 foot).

(2) The use of shielded wire for AC input power may not be necessary but is always recommended.

Motor Considerations

Due to the operational characteristics of AC variable frequency drives, motors with inverter grade insulation systems designed to meet or exceed NEMA MG1 Part 31.40.4.2 standards for resistance to spikes of 1600 volts are recommended.

Guidelines presented in the Wiring and Grounding Guidelines for Pulse Width Modulated (PWM) AC Drives, publication DRIVES-IN001, must be followed when using non-inverter grade motors to avoid premature motor failures.

Power Terminals

ATTENTION: To guard against drive damage, **Do Not** connect power wires directly to the drive power terminals. Power wiring must be connected to bus bars which are fastened to the drive power terminals. See page 16.

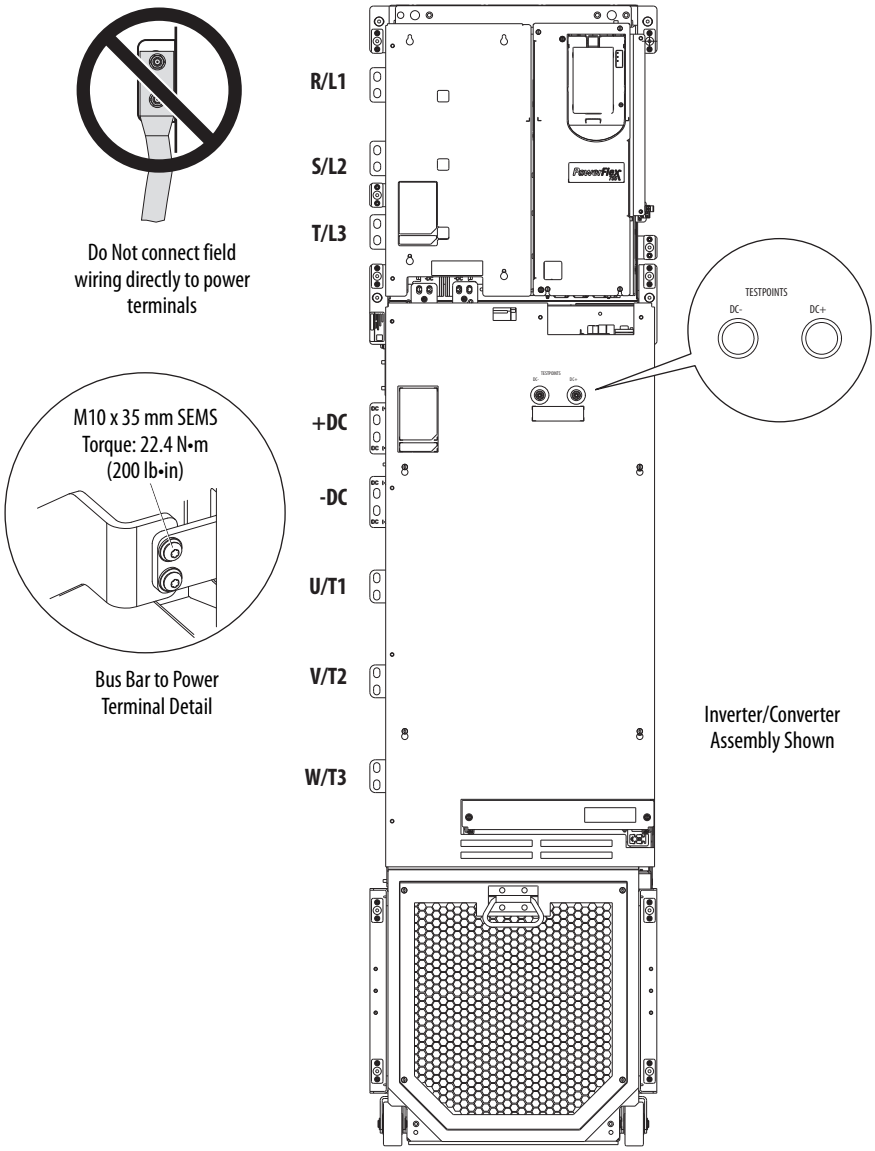

For easier power wiring, movable L-bracket assemblies are included with the Field Termination kits to connect the AC line input, output to the motor, and DC bus power. Arrange the moveable L-brackets and secure using the torque guidelines listed. See pages 49...57 for kit installation guidelines and page 39 or page 40 for recommended mounting locations and dimensions.

Termination Kit Current Rating

Termination Kit	Frame	Catalog Number	Current Rating at Specified Drive Input Voltage			
			380…400V AC 513…540V DC	480V AC 650V DC	600V AC 810V DC	690V AC 932V DC
Converter (AC Input)	8	20-750-BUS2-F8	819A AC	755A AC	514A AC	499A AC
Inverter (AC Output)	8	20-750-BUS3-F8	832A AC	800A AC	545A AC	530A AC
Inverter (DC Bus)	8	20-750-BUS4-F8	957A DC	882A DC	601A DC	583A DC
DC Input for Common Bus Precharge	8	20-750-BUS5-F8	957A DC	882A DC	601A DC	583A DC
Converter (AC Input)	9	20-750-BUS2-F9	1638A AC	1510A AC	1028A AC	998A AC
Inverter (AC Output)	9	20-750-BUS3-F9	1664A AC	1600A AC	1090A AC	1060A AC
Inverter (DC Bus - 400/480V)	9	20-750-BUS4-F9	1914A DC	1764A DC	N/A (1)	N/A (1)
DC Input for Common Bus Precharge	9	20-750-BUS5-F9	1914A DC	1764A DC	1202A DC	1166A DC
Inverter (DC Bus - 600/690V)	9	20-750-BUS6-F9	N/A (1)	N/A (1)	1202A DC	1166A DC
Converter (AC Input)	10	20-750-BUS2-F10	2457A AC	2265A AC	1542A AC	1497A AC
Inverter (AC Output)	10	20-750-BUS3-F10	2496A AC	2400A AC	1635A AC	1590A AC
Inverter (DC Bus - 400/480V)	10	20-750-BUS4-F10	2871A DC	2646A DC	N/A (1)	N/A (1)
DC Input for Common Bus Precharge	10	20-750-BUS5-F10	2871A DC	2646A DC	1803A DC	1749A DC
Inverter (DC Bus - 600/690V)	10	20-750-BUS6-F10	N/A (1)	N/A (1)	1803A DC	1749A DC

(1) N/A - not to be used in this configuration.

UL Listed Barrel Lugs: Approximate Maximum Dimensions

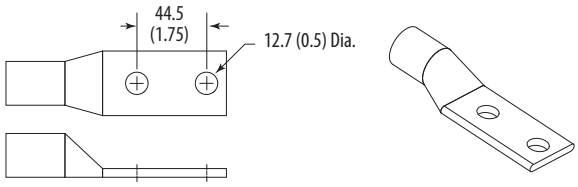

Typical Lug Connection/L-Bracket Options

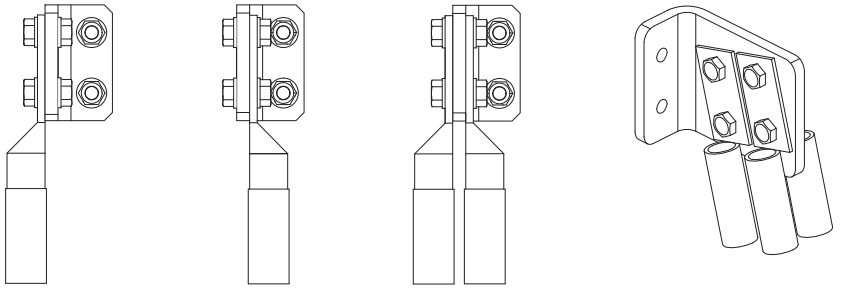

Left Side | Right Side | Both Sides | Three Lugs Total on Both Sides

IMPORTANT Verify that all lug fasteners and L-brackets are properly torqued to 37.9 N•m (336 lb•in). Torque down or remove any unused L-brackets.

Kit Installation Guidelines

Frame	Kit	Steps
8	Converter AC Input Field Termination 20-750-BUS2-F8	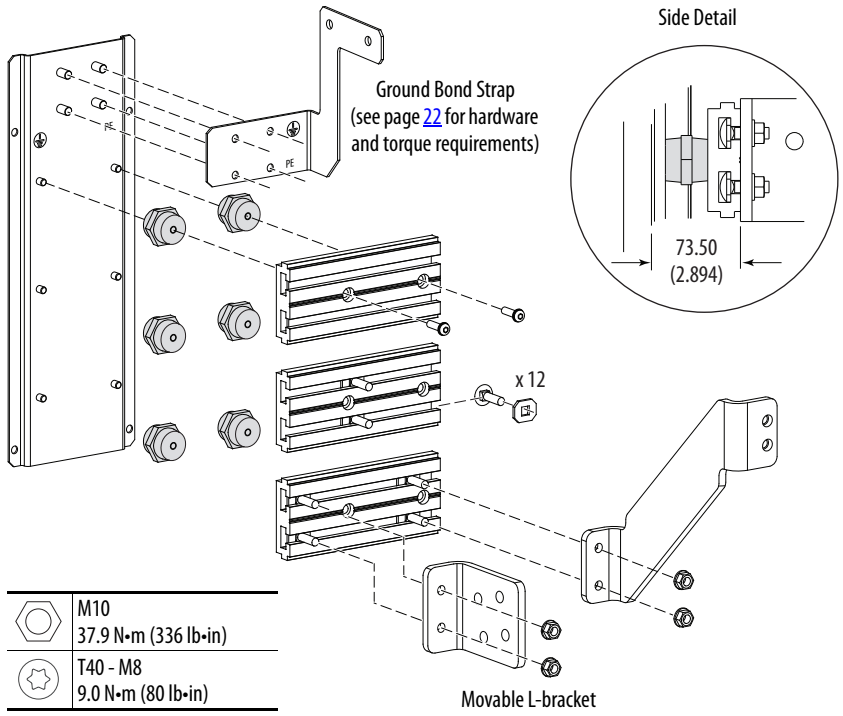
8	Inverter AC Output Field Termination 20-750-BUS3-F8	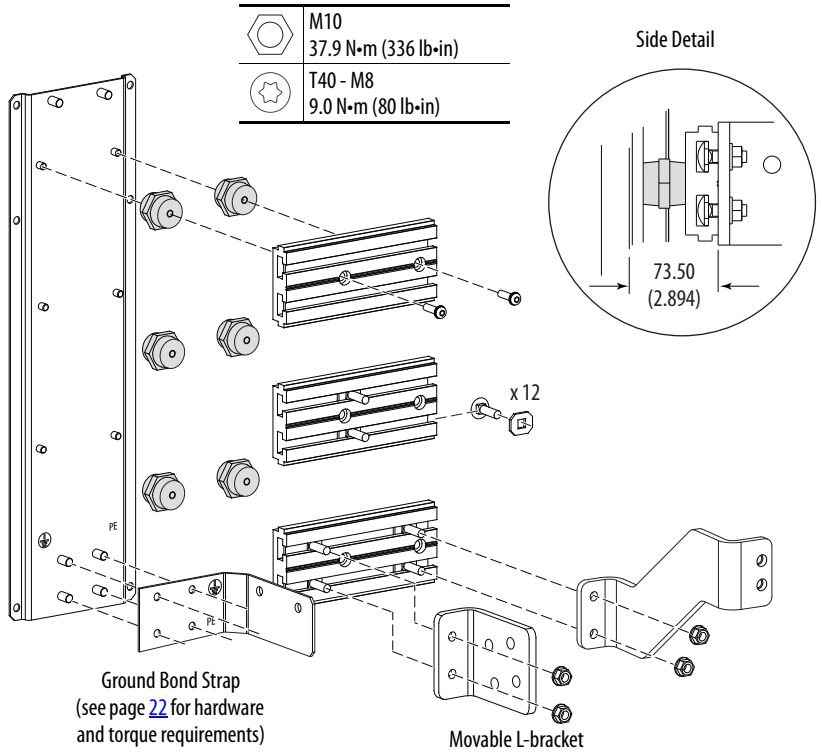

Frame	Kit	Steps
8	Inverter DC Bus Field Termination 20-750-BUS4-F8	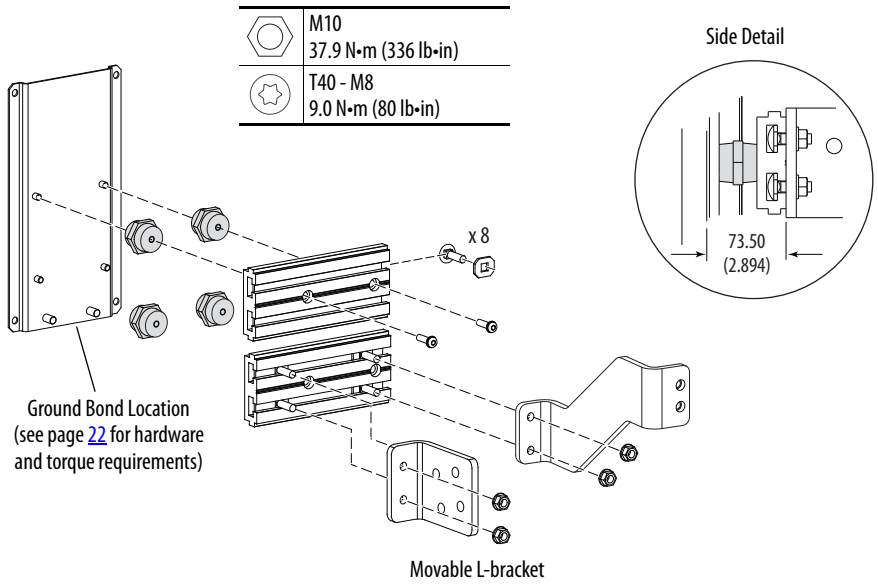
8	DC Input for Common Bus Precharge Field Termination 20-750-BUS5-F8	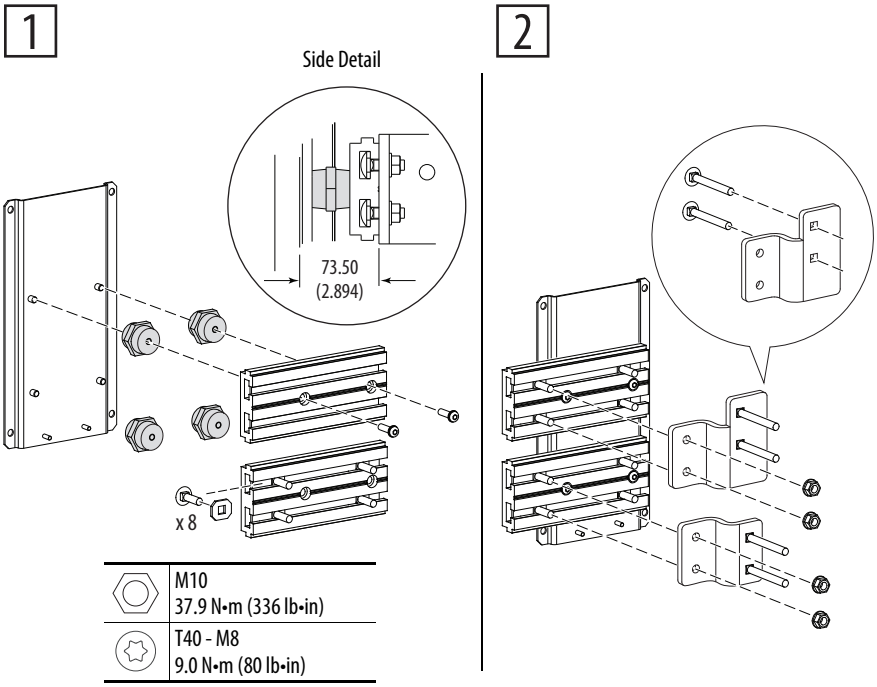

Frame	Kit	Steps
8	DC Input for Common Bus Precharge Field Termination (continued)	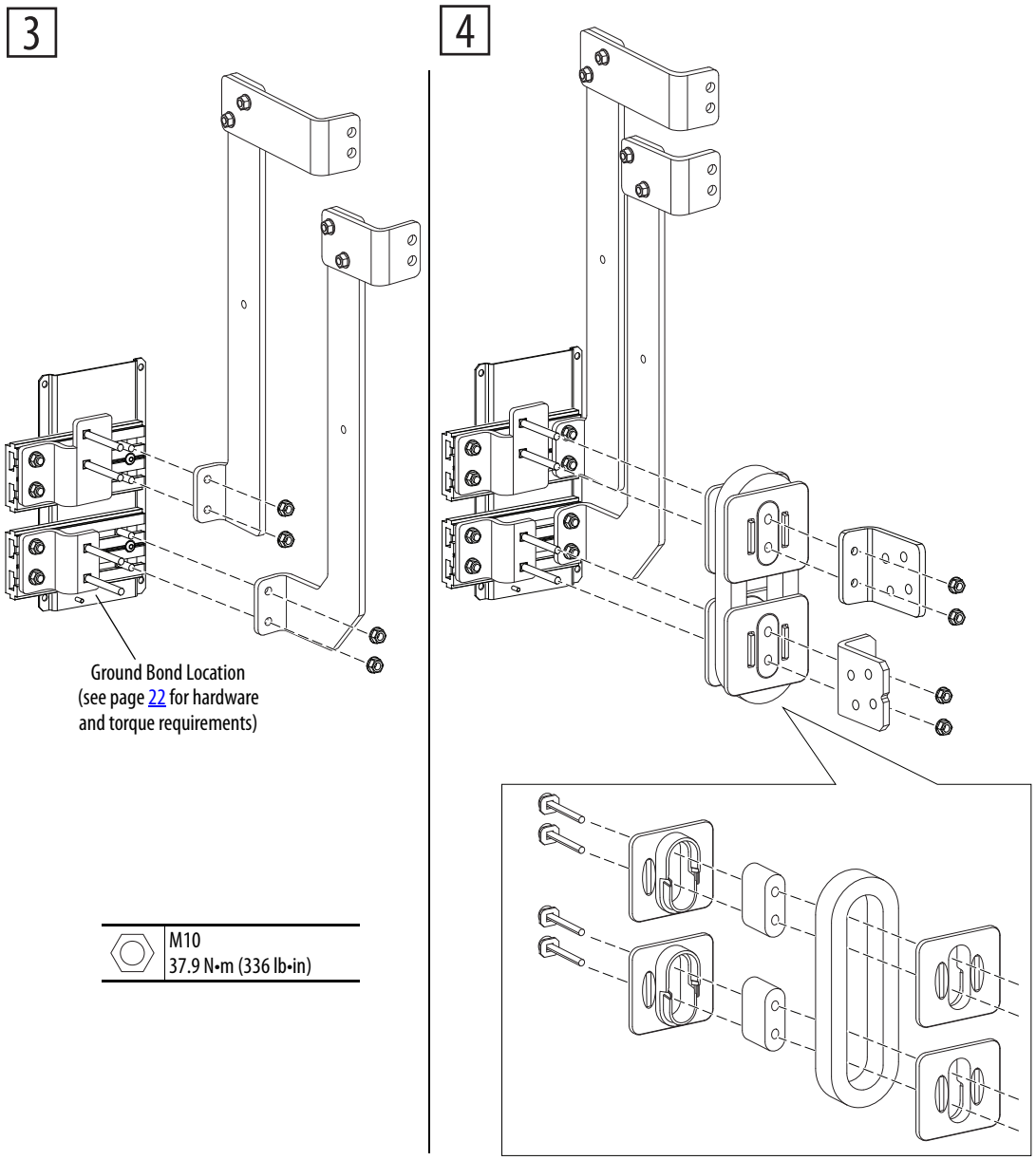

Frame	Kit	Steps
8 … 10	Mounting Floor/Rail 20-750-MNT3-F8	Rittal Style Enclosure Note: Discard unused spacers x2 The Floor/Rail Kit is supplied with two sets of spacers that are used to adapt the kit to different enclosure types. See the diagram below. Hoffman Style Enclosure x2 x2

Frame	Kit	Steps
9	Converter AC Input Field Termination 20-750-BUS2-F9	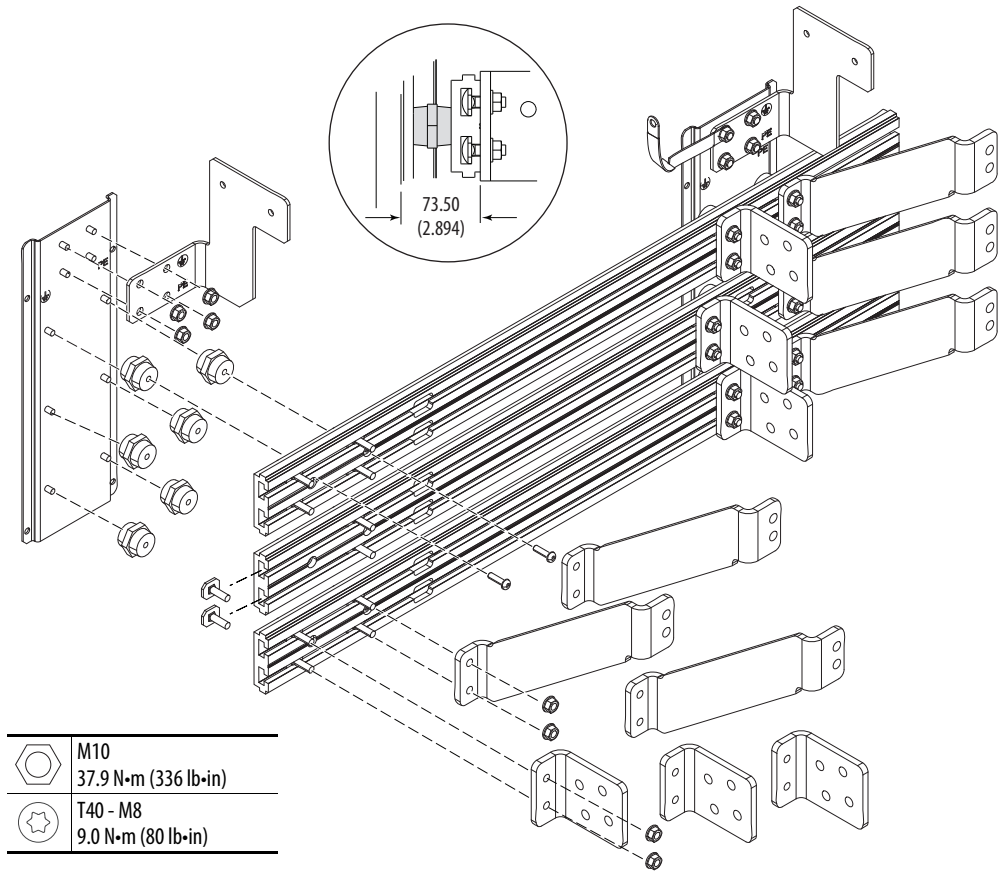

Frame	Kit	Steps
9	Inverter AC Output Field Termination 20-750-BUS3-F9	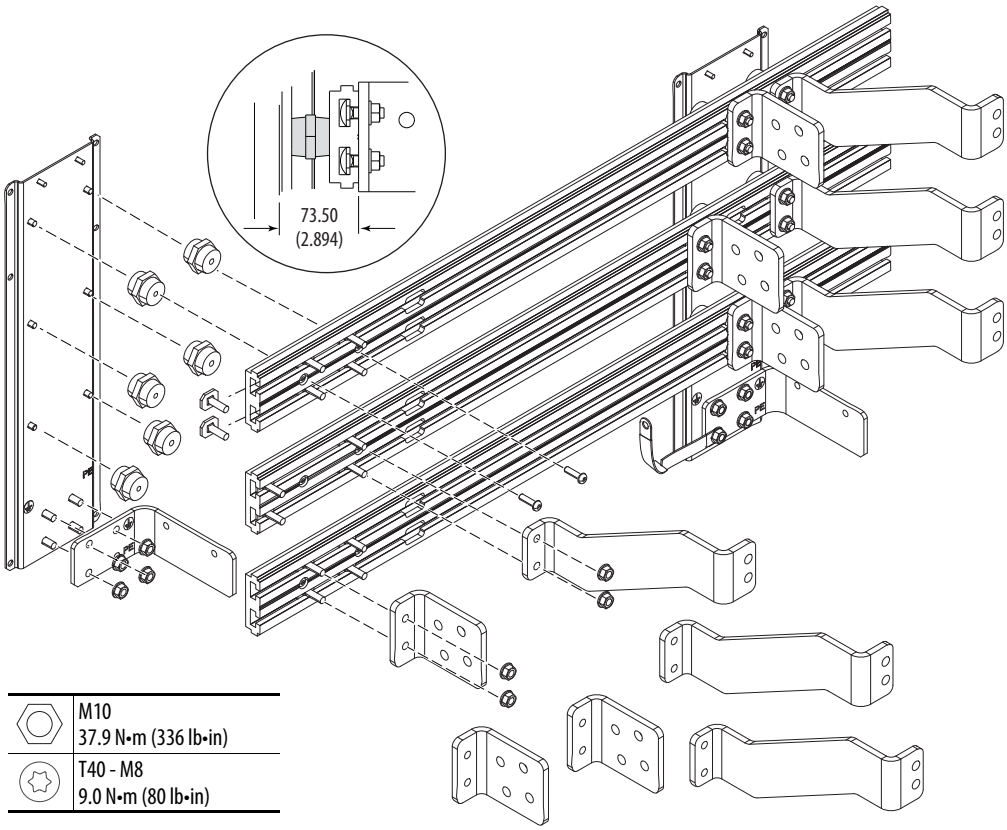 M10 37.9 N•m (336 lb•in) T40 - M8 9.0 N•m (80 lb•in)
9	Inverter DC Bus Field Termination 20-750-BUS4-F9 (400/480V) 20-750-BUS6-F9 (600/690V)	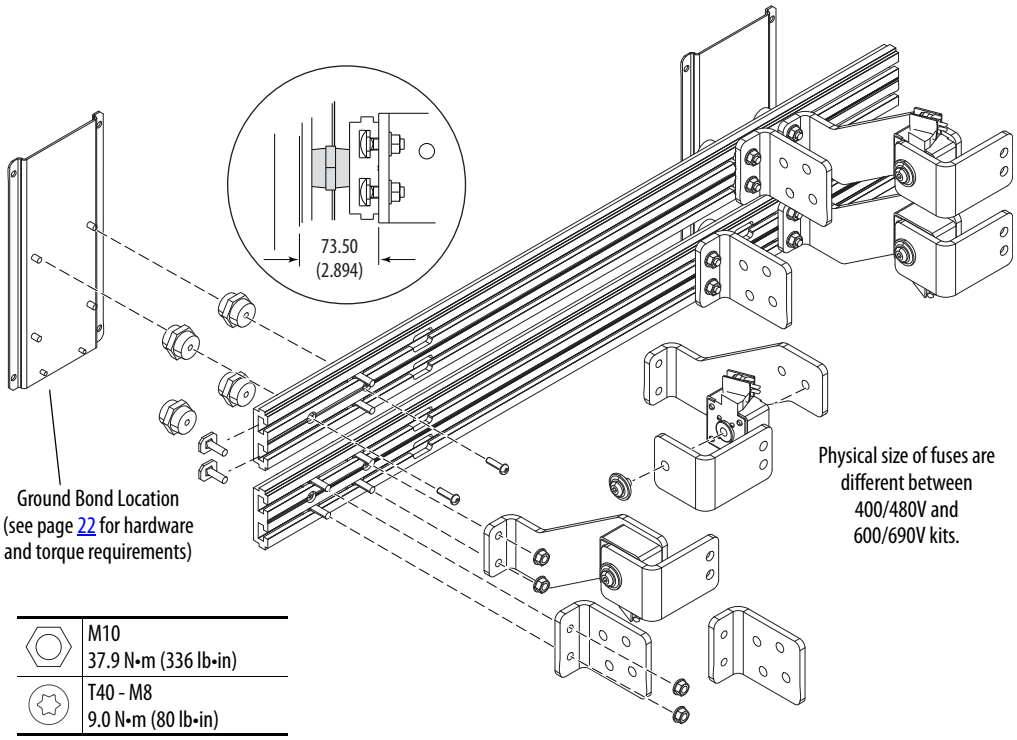 M10 37.9 N•m (336 lb•in) T40 - M8 9.0 N•m (80 lb•in)

Frame	Kit	Steps
9	DC Input for Common Bus Precharge Field Termination 20-750-BUS5-F9	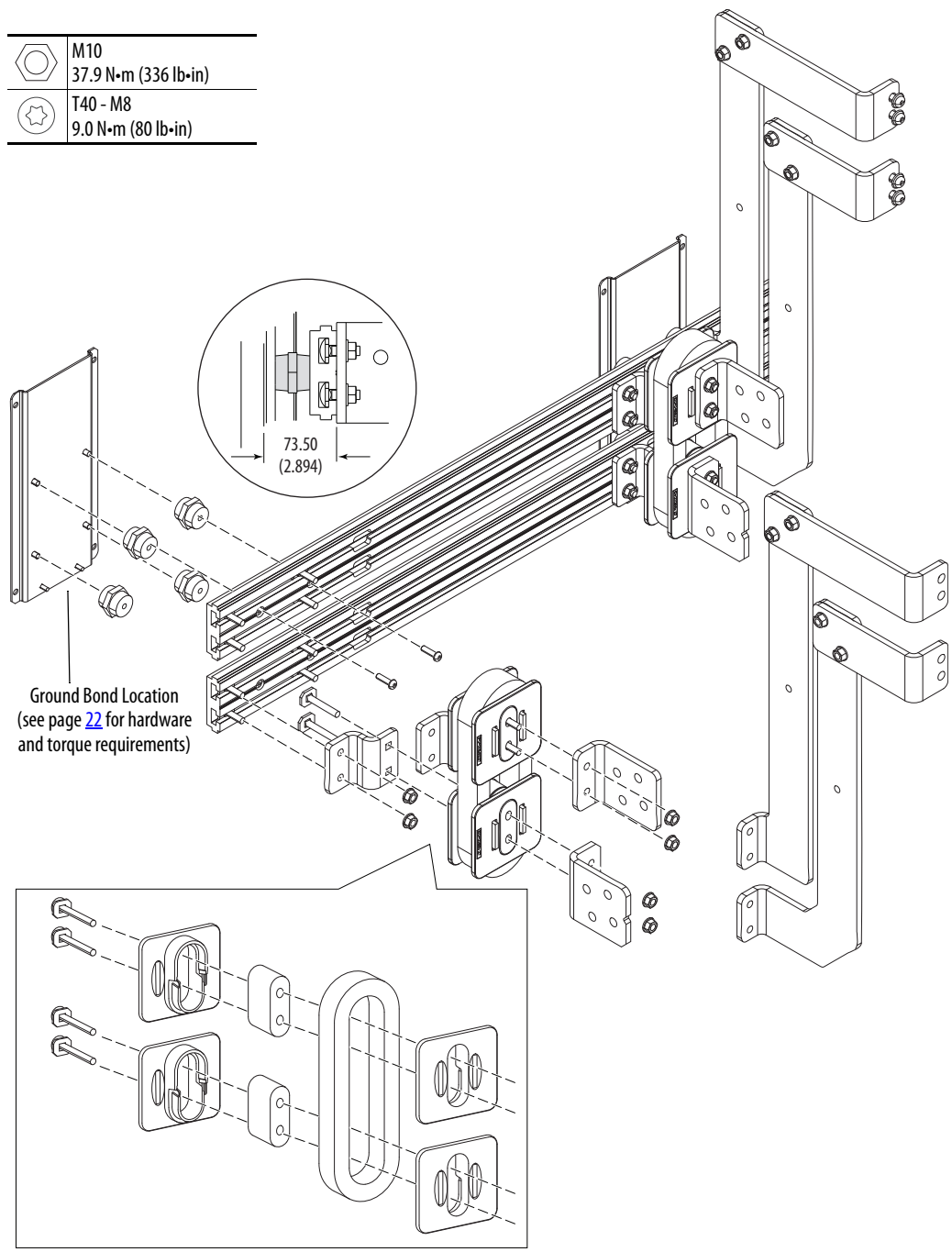

Frame	Kit	Steps
10	Converter AC Input Field Termination 20-750-BUS2-F10	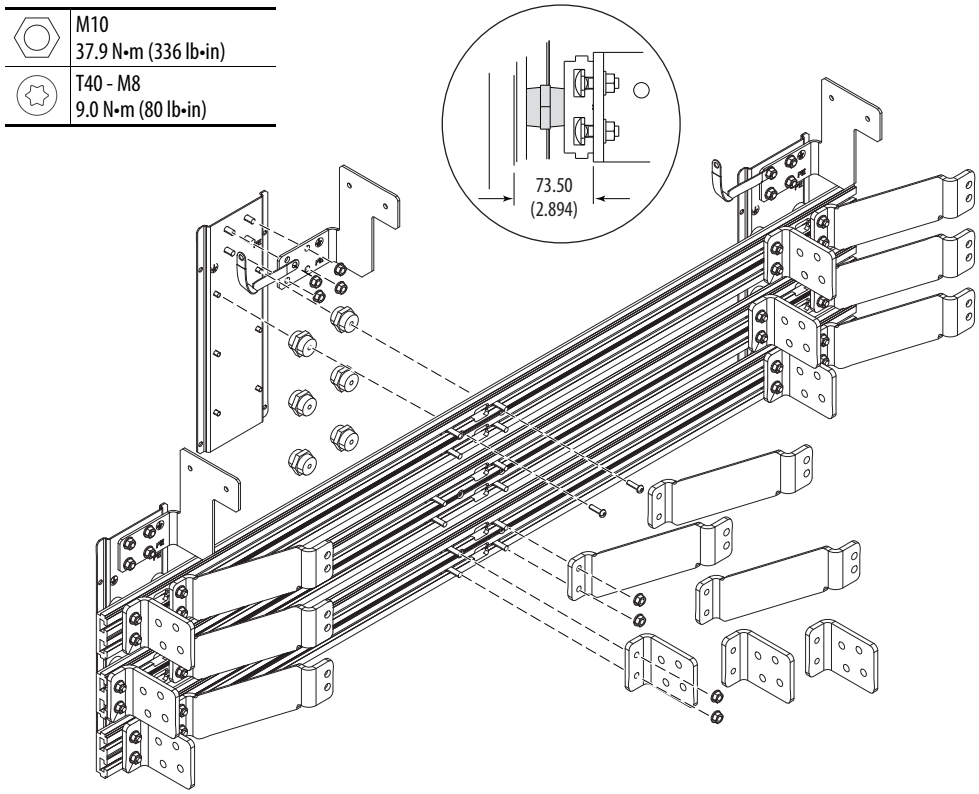
10	Inverter AC Output Field Termination 20-750-BUS3-F10	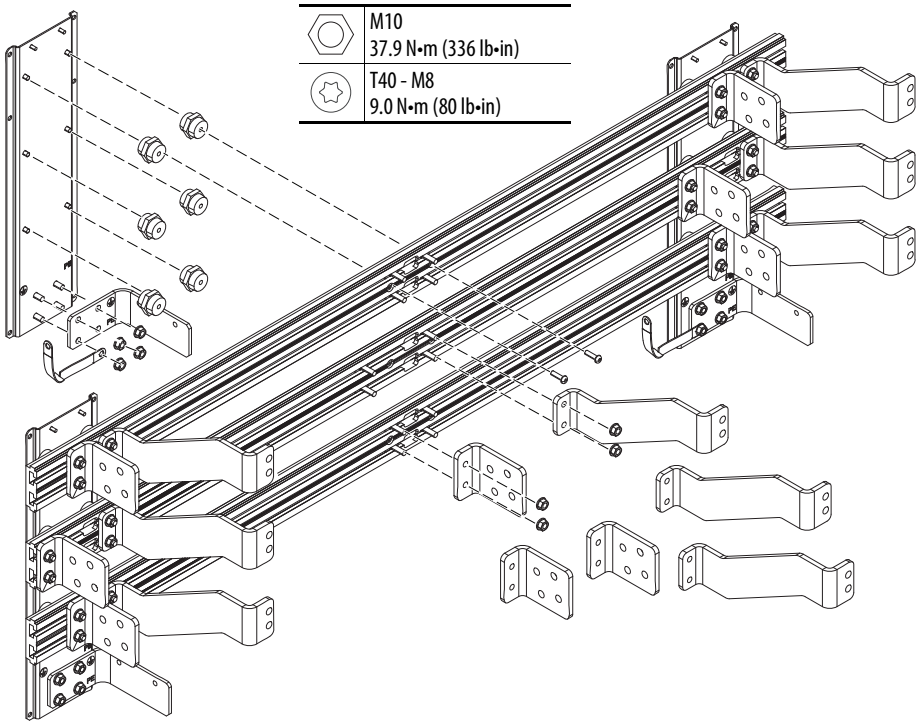

Frame	Kit	Steps
10	Inverter DC Bus Field Termination 20-750-BUS4-F10 (400/480V) 20-750-BUS6-F10 (600/690V)	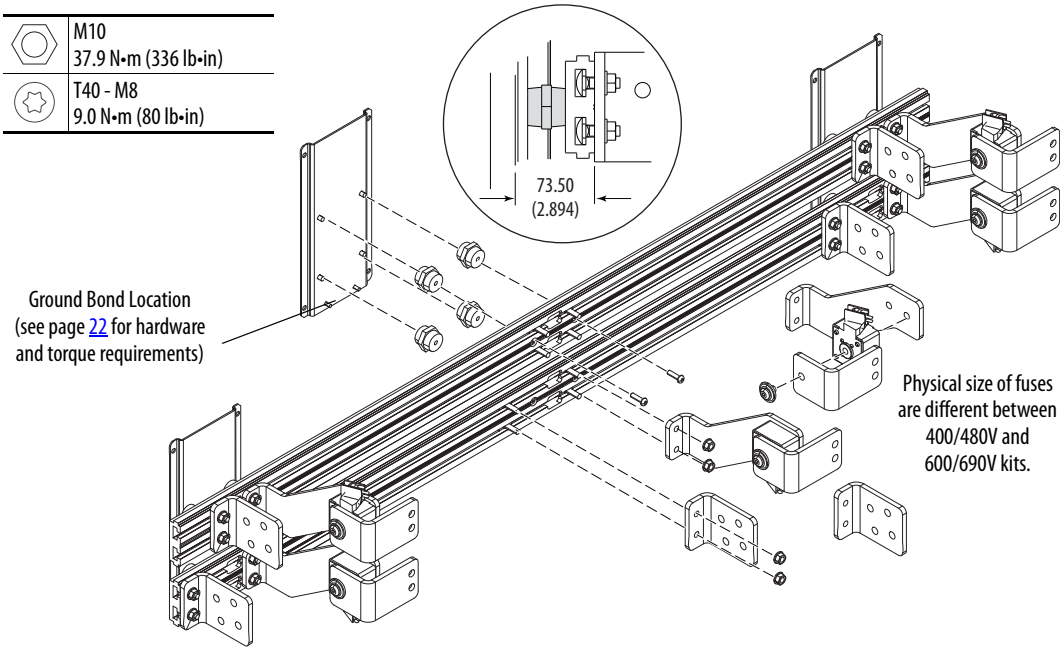
10	DC Input for Common Bus Precharge Field Termination 20-750-BUS5-F10	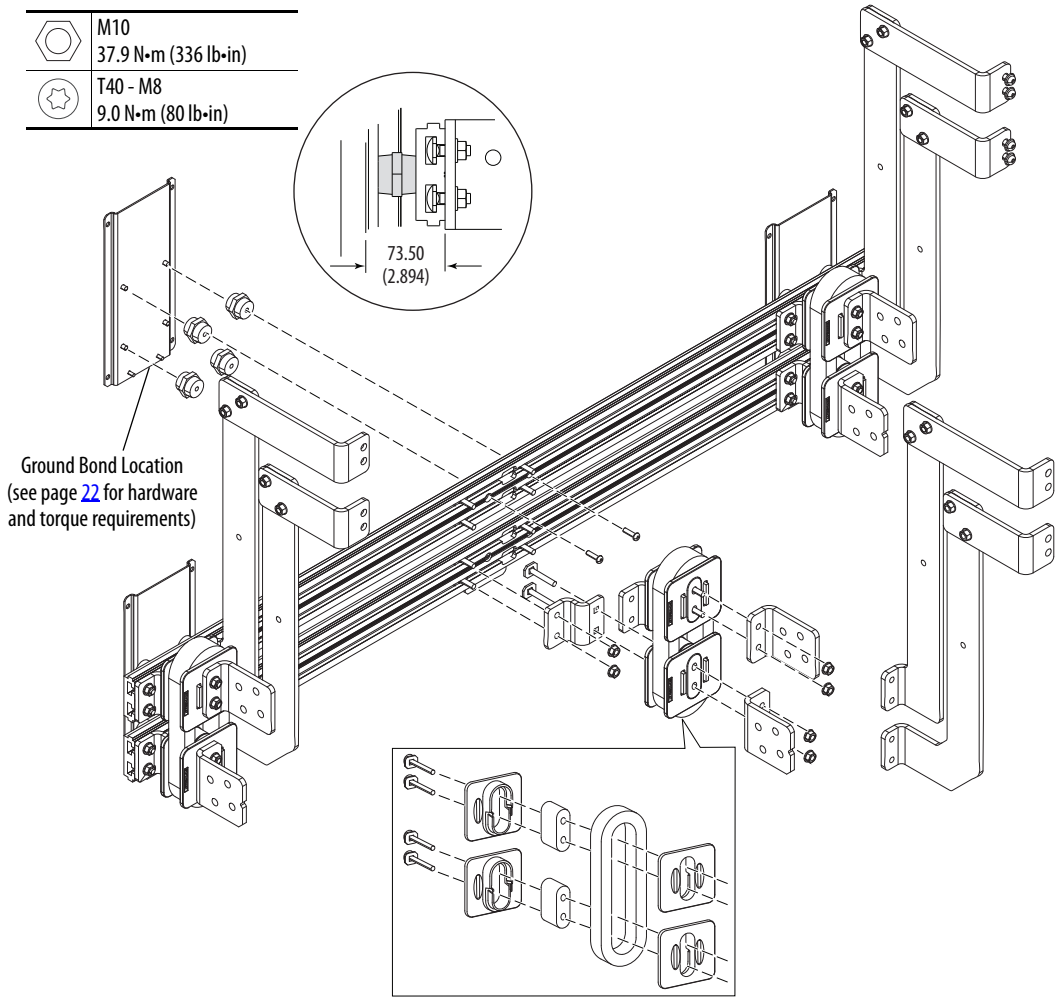

Cable Routing

Control Pod Cable Routing

Supports, clips, and cable ties are provided to help route and secure cabling inside the Control Pod.

IMPORTANT
- When routing cabling into the control Pod, do not block the cooling fan outlet.
- Do not ground shield wires to inner sheet metal bucket supporting option modules.

Figure 20 - Frame 8 Control POD Detail

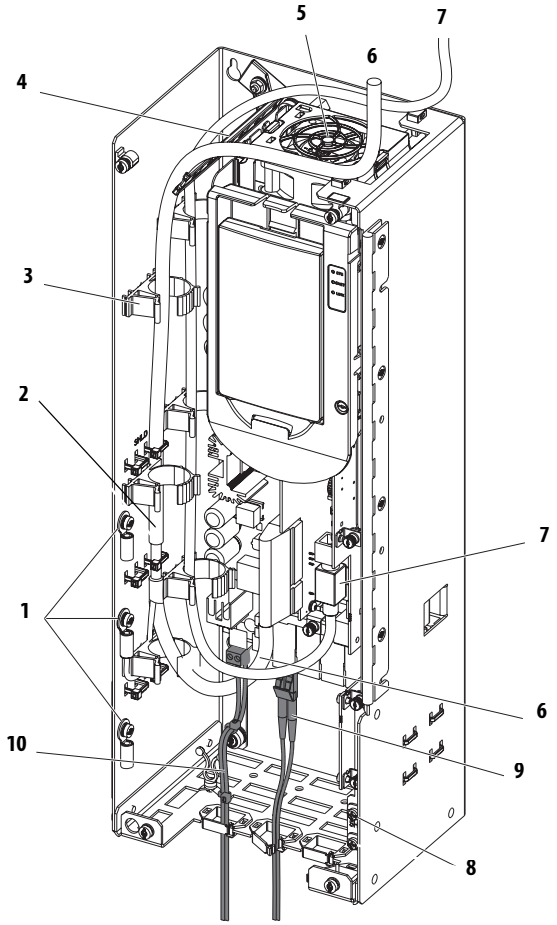

No.	Description
1	I/O signal cable shield termination points. Use M4 screws and ring terminals provided to tie together and terminate drain wires and shields.
2	Ground shield wires to outer sheet metal bucket. Strip cable insulation 25 mm (1 in.) to expose braid. Attach cable ties around shield and through slots. Pull tight.
3	Attachment points for cable management devices provided (6 places).
4	Cable support ladder.
5	Fan outlet. Keep clear to help ensure proper cooling.
6	Control cable entry and routing.
7	Human Interface Module (HIM) cable entry and routing.
8	Shield termination points.
9	Inverter Fiber-optic connection
10	Internal 24V power connection

I/O Wiring

Important points to remember about I/O wiring:

- Always use copper wire.
- Wire with an insulation rating of 600V or greater is recommended.
- Control and signal wires should be separated from power wires by at least 0.3 meters (1 foot).
- For CE compliance, 115 volt digital input wiring must be shielded or must not exceed 30 meters (98 feet) in length.
- In order to maintain electrical safety for all user-accessible low voltage circuits (ELV/PELV circuits), I/O terminals designated for 24V or lower voltage must not be connected to a circuit of higher voltage or a circuit which is not adequately insulated from dangerous voltages with double or reinforced insulation within other connected equipment or wiring.
- In order to provide electrical safety for user-accessible low voltage I/O circuits which are referenced to earth (PELV circuits) and which may be touched simultaneously, care should be taken to provide a common earth reference for all equipment connected to the drive.

IMPORTANT I/O terminals labeled "(–)" or "Common" are not referenced to earth ground and are designed to greatly reduce common mode interference. Grounding these terminals can cause signal noise.

ATTENTION: Hazard of personal injury or equipment damage exists when using bipolar input sources. Noise and drift in sensitive input circuits can cause unpredictable changes in motor speed and direction. Use speed command parameters to help reduce input source sensitivity.

I/O Wire Recommendations

Type		Wire Type(s)	Description	Min. Insulation Rating
Signal (1) (2) (3)	Standard Analog I/O	–	0.750 mm^2 (18 AWG), twisted pair, 100% shield with drain.	300V, 75…90 °C (167…194 °F)
	Remote Pot	–	0.750 mm^2 (18 AWG), 3 conductor, shielded.	
	Encoder/Pulse I/O <30 m (100 ft)	Combined	0.196 mm^2 (24 AWG) individually shielded pairs.	
	Encoder/Pulse I/O 30 to 152 m (100 to 500 ft)	Signal	0.196 mm^2 (24 AWG) individually shielded pairs.	
		Power	0.750 mm^2 (18 AWG) individually shielded pairs	
		Combined	0.330 mm^2 (22 AWG), power is 0.500 mm^2 (20 AWG) individually shielded pairs.	
	Encoder/Pulse I/O 152…259 m (500…850 ft)	Signal	0.196 mm^2 (24 AWG) individually shielded pairs.	
		Power	0.750 mm^2 (18 AWG) individually shielded pairs.	
		Combined	0.750 mm^2 (18 AWG) individually shielded pairs.	
Digital I/O **Safety Inputs** **Homing Inputs** (1)(2)(3)(4)	Unshielded	–	Per US NEC or applicable national or local code.	300V, 60 °C (140 °F)
	Shielded	Multi-conductor shielded cable	0.750 mm^2 (18 AWG), 3 conductor, shielded.	

(1) Control and signal wires should be separated from power wires by at least 0.3 meters (1 foot).
(2) If the wires are short and contained within a cabinet which has no sensitive circuits, the use of shielded wire may not be necessary, but is always recommended.
(3) I/O terminals labeled "(–)" or "Common" are not referenced to earth ground and are designed to greatly reduce common mode interference. Grounding these terminals can cause signal noise.
(4) Safety option modules 20-750-S and 20-750-S1 require shielded cable.

I/O Terminal Blocks

The various I/O terminal blocks are located in the Control Pod.

Main Control Board

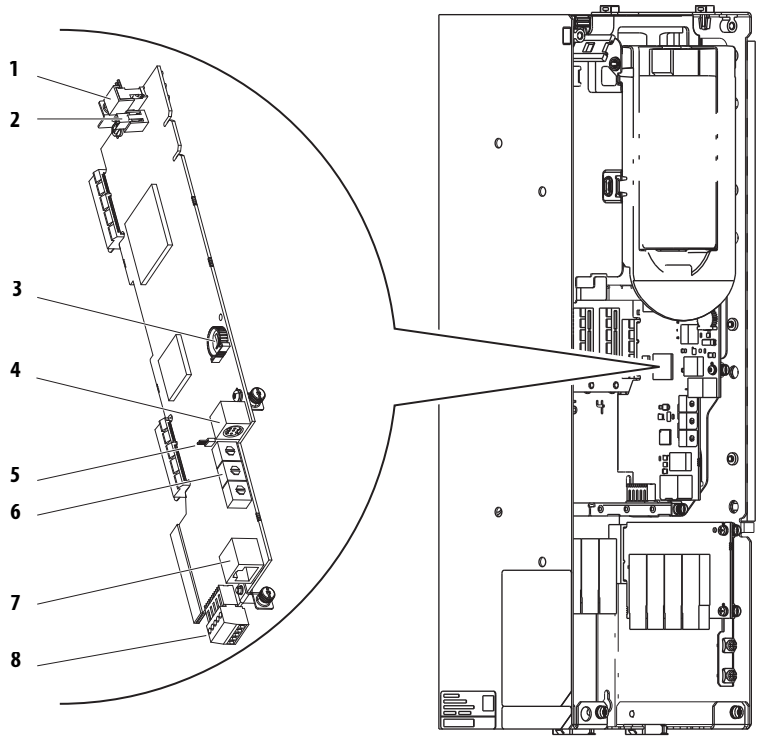

Main Control Board Details

No.	Name	Description
1	HIM Connector	DPI Port 1 (HIM Cradle) connection.
2	Fan Connector	Power supply for internal cooling fan.
3	Battery Receptacle	User installed CR1220 lithium coin cell battery provides power to the Real Time Clock (Optional, not supplied). Preserves the Real Time Clock setting in the event power to the drive is lost or cycled.
4	DPI Port 2	Cable connection for handheld and remote HIM options.
5	ENABLE Jumper	Hardware enable jumper. Removed when a hardware enable configuration is utilized.
6	Embedded EtherNet/IP (1) Address Selectors	Rotary switches for setting lowest octet of EtherNet/IP address (forces address to 192.168.1.xxx). See the PowerFlex 750-Series AC Drives Programming Manual, publication 750-PM001 for instructions on setting the IP address.
7	Embedded EtherNet/IP (1) Connector	Network cable connection.
8	TB1	I/O terminal block.

(1) See the PowerFlex 755 Drive Embedded EtherNet/IP Adapter User Manual, publication 750COM-UM001.

Terminal Block Specifications

Name	Wire Size Range		Torque		Strip Length
	Maximum	Minimum	Maximum	Recommended	
Main Control Board - TB1	2.5 mm^2 (14 AWG)	0.3 mm^2 (28 AWG)	0.25 N•m (2.2 lb•in)	0.2 N•m (1.8 lb•in)	6 mm (0.24 in.)

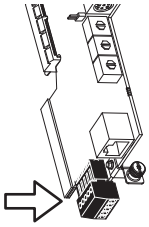

TB1 Terminal Designations

Fixed I/O	Terminal	Name	Description
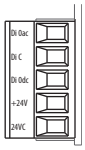	Di 0ac	Digital Input 0 (120V AC)	Connections for AC power supply.
	Di C	Digital Input Common	Digital input common
	Di 0dc	Digital Input 0 (24V DC)	Connections for DC power supply.
	+24V	+24 Volt Power	Connections for drive supplied 24V power. 150 mA maximum
	24VC	24 Volt Common	

Hardware Enable Circuitry

Digital Input 0 can be used as a general purpose programmable input, or by removal of a jumper, configured as a dedicated hardware enable, which is unaffected by parameter settings.

To configure Digital Input 0 as a dedicated hardware enable, complete the following steps.

1. Access the Control Pod.
2. Locate and remove the ENABLE Jumper on the Main Control Board (see page 60).

Fiber Interface Board

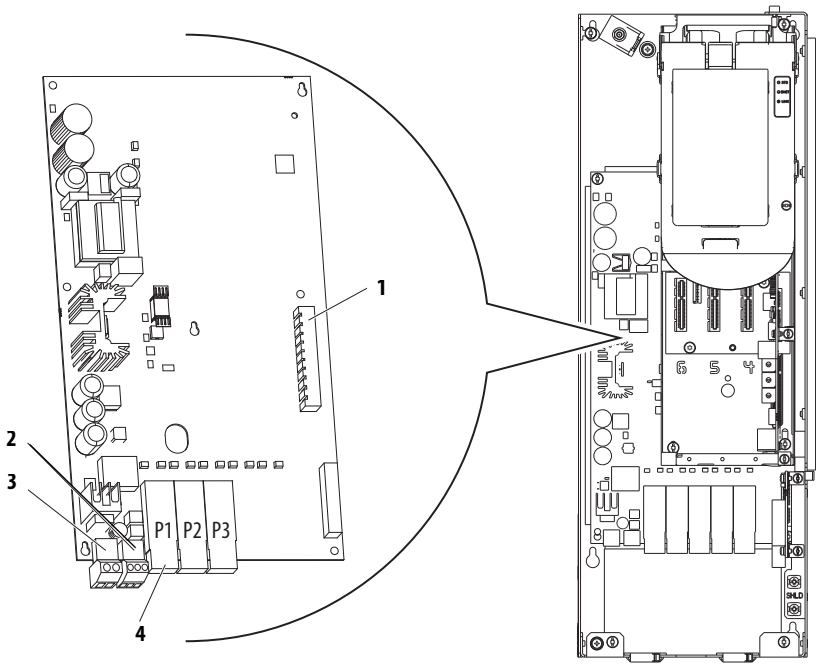

Fiber Interface Board Details

No.	Name	Description
1	Main Control Board Connector	98 pin main control board interface connection.
2	P13	Connections for user-supplied 24 volt power. Powers control circuits when main power is removed.
3	P14	Connections for internal drive-supplied 24 volt power. Connection is factory wired and must not be modified by the user. Powers control circuits when main power is connected.
4	Inverter Connections	Fiber optic ports: P1 = INV1, P2 = INV2, P3 = INV3

Terminal Block Specifications

Name	Wire Size Range		Torque		Strip Length
	Maximum	Minimum	Maximum	Recommended	
Fiber Interface Connector P13	4.0 mm^2 (12 AWG)	0.25 mm^2 (24 AWG)	0.5 N•m (4.4 lb•in)	0.4 N•m (3.5 lb•in)	7 mm (0.28 in.)
Fiber Interface Connector P14	2.5 mm^2 (14 AWG)	0.3 mm^2 (28 AWG)	0.25 N•m (2.2 lb•in)	0.2 N•m (1.8 lb•in)	6 mm (0.24 in.)

P13 Terminal Designations

Power Block	Terminal	Name	Description
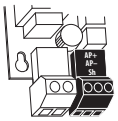	AP+	+24 Volt Auxiliary Power	Connections for customer supplied power supply: 24V DC ±10%, 5 A, PELV (Protective Extra Low Voltage) or SELV (Safety Extra Low Voltage)
	AP–	Auxiliary Power Common	
	Sh	Shield	Terminating point for wire shields.

P14 Terminal Designations

Power Block	Terminal	Name	Description
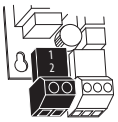	1	+24 Volt Power	Connections for drive supplied power.
	2	Power Common	

Option Modules

For a complete listing and description of all available Option Modules, see the PowerFlex 750-Series AC Drives Installation Instructions, publication 750-IN001.

Compatible port locations may be restricted for each option module. An icon with position number(s) is provided to indicate which module ports are compatible. For example, the icon to the right indicates that the option module is only compatible with port 4.

ATTENTION: Hazard of equipment damage exists if an option module is installed or removed while the drive is powered. To avoid damaging the drive, verify that the voltage on the bus capacitors has discharged completely and all control power is removed before performing any work on the drive. Measure the DC bus voltage at the DC+ and DC- TESTPOINT sockets on the front of the power module (see page 47). The voltage must be zero

To install an option module:

1. Firmly press the module edge connector into the desired port.
2. Tighten the top and bottom retaining screws.

IMPORTANT Do not over-tighten retaining screws.

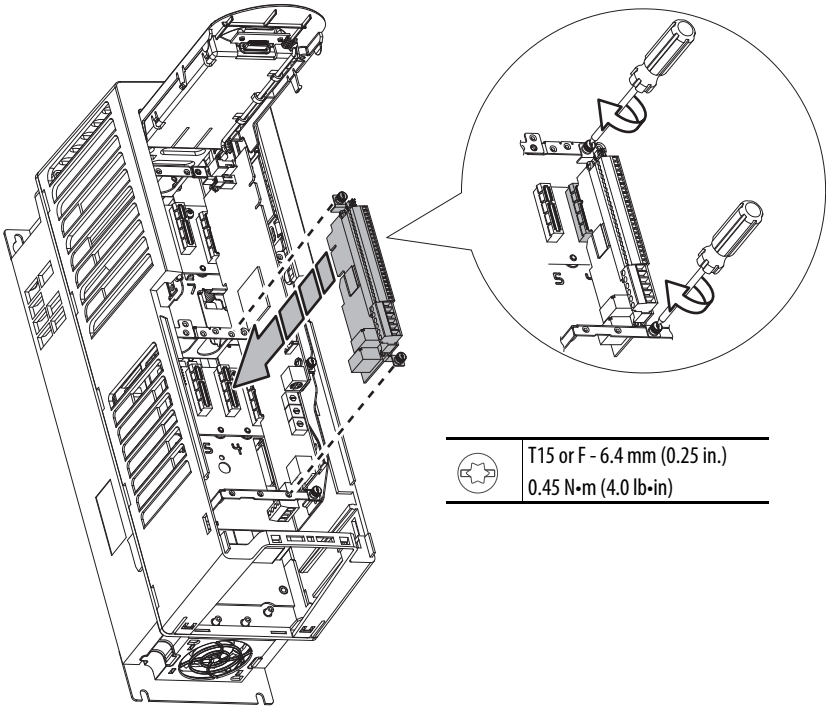

20-750-2262C-2R (24 Volts DC)
20-750-2263C-1R2T (24 Volts DC)
20-750-2262D-2R (120 Volts AC)

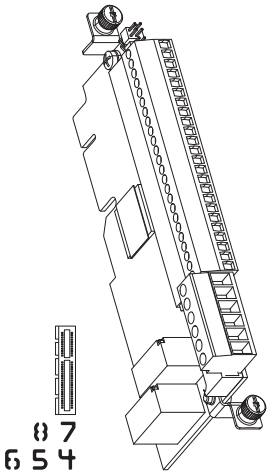

I/O Module

ATTENTION: Risk of equipment damage exists. Ensure that the correct voltage is applied to the I/O Module digital inputs. See the I/O Module catalog number to determine the voltage rating.

- 20-750-2262**C**-2R is rated 24 Volts DC
- 20-750-2262**C**-1R2T is rated 24 Volts DC
- 20-750-2262**D**-2R is rated 120 Volts AC

Input Mode Jumpers

Jumper Position	Voltage Mode	Current Mode
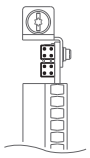	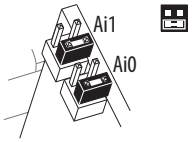	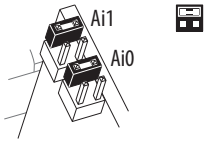

I/O Option Module Terminal Block Specifications

Name	Wire Size Range		Torque		Strip Length
	Maximum	Minimum	Maximum	Recommended	
I/O Module TB1	2.5 mm^2 (14 AWG)	0.3 mm^2 (28 AWG)	0.25 N•m (2.2 lb•in)	0.2 N•m (1.8 lb•in)	6 mm (0.24 in.)
I/O Module TB2	4.0 mm^2 (12 AWG)	0.25 mm^2 (24 AWG)	0.5 N•m (4.4 lb•in)	0.4 N•m (3.5 lb•in)	7 mm (0.28 in.)

TB1 Terminal Designations

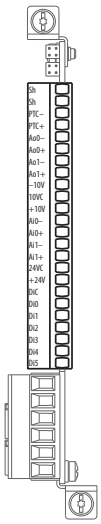

Terminal	Name	Description	Related Param (5)
Sh	Shield	Terminating point for wire shields when an EMC plate or conduit box is not installed.	
Sh			
Ptc–	Motor PTC (–)	Motor protection device (Positive Temperature Coefficient).	40 on Port X
Ptc+	Motor PTC (+)		
Ao0–	Analog Out 0 (–)	Bipolar, ±10V, 11 bit & sign, 2 k ohm minimum load. 4-20 mA, 11 bit & sign, 400 ohm maximum load.	75 on Port X
Ao0+	Analog Out 0 (+)		
Ao1–	Analog Out 1 (–)		85 on Port X
Ao1+	Analog Out 1 (+)		
–10V	–10 Volt Reference	2k ohm minimum.	
10VC	10 Volt Common	For (–) and (+) 10 Volt references.	
+10V	+10 Volt Reference	2k ohm minimum.	
Ai0–	Analog Input 0 (–)	Isolated (3), bipolar, differential, 11 bit & sign. Voltage Mode: ±10V @ 88k ohm input impedance. Current Mode: 0-20 mA @ 93 ohm input impedance.	50, 70 on Port X
Ai0+	Analog Input 0 (+)		
Ai1–	Analog Input 1 (–)		60, 70 on Port X
Ai1+	Analog Input 1 (+)		
24VC	24 Volt Common (1)	Drive supplied logic input power. 200 mA max. per I/O module 600 mA max per drive	
+24V	+24 Volt DC (1)		
Di C	Digital Input Common	Common for Digital Inputs 0…5	
Di 0	Digital Input 0 (2)	24V DC - Opto isolated Low State: less than 5V DC High State: greater than 20V DC 11.2 mA DC 115V (132V Max) AC, 50/60 Hz (4) - Opto isolated Low State: less than 30V AC High State: greater than 100V AC	1 on Port X
Di 1	Digital Input 1 (2)		
Di 2	Digital Input 2 (2)		
Di 3	Digital Input 3 (2)		
Di 4	Digital Input 4 (2)		
Di 5	Digital Input 5 (2)		

(1) Not present on 120V versions.
(2) Digital Inputs are either 24 Volts DC (2262C) or 115 Volts AC (2262D) based on module catalog number. Ensure applied voltage is correct for I/O module.
(3) Differential Isolation - External source must be maintained at less than 160V with respect to PE. Input provides high common mode immunity.
(4) For CE compliance use shielded cable. Cable length should not exceed 30 m (98 ft).
(5) I/O Module parameters will also have a Port designation.

TB2 Terminal Designations (2 Relay Outputs: 2R)

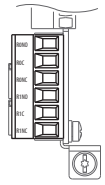

Relay Out	Terminal	Name	Description	Related Param
	R0NO	Relay 0 N.O.	Relay Normally Open contact output: 240V AC, 24V DC, 2 A max. General Purpose (Inductive) / Resistive	10, 100, 101, 105, 106 on Port X
	R0C	Relay 0 Common		
	R0NC	Relay 0 N.C.		
	R1NO	Relay 1 N.O.	Relay Normally Closed contact output: 240V AC, 24V DC, 2 A max. Resistive Only	20, 110, 111, 115, 116 on Port X
	R1C	Relay 1 Common		
	R1NC	Relay 1 N.C.		

TB2 Terminal Designations (1 Relay and 2 Transistor Outputs: IR2T)

Relay Out	Terminal	Name	Description	Related Param
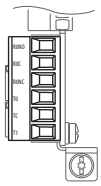	R0NO	Relay 0 N.O.	Relay Normally Open contact output: 240V AC, 24V DC, 2 A max. General Purpose (Inductive) / Resistive Relay Normally Closed contact output: 240V AC, 24V DC, 2 A max. Resistive Only	10, 100, 101, 105, 106 on Port X
	R0C	Relay 0 Common		
	R0NC	Relay 0 N.C.		
	T0	Transistor Output 0	Transistor output Rating: 24V DC = 1 A max. 24V DC = 0.4 A Max for U.L. applications Resistive	20 on Port X
	TC	Transistor Output Common		
	T1	Transistor Output 1		30 on Port X

Fuse and Circuit Breaker Ratings

The tables on pages 68...74 provide drive ratings (including continuous, 1 minute and 3 second) and recommended AC line input fuse and circuit breaker information. Sizes listed are the recommended sizes based on 40 °C (104 °F) and the U.S. N.E.C. Other country, state or local codes may require different ratings. In addition, Frame 8 and larger drives include AC line fuses (with blown fuse indicators) to provide drive short circuit protection.

Input Device Requirements

Frames	Enclosure Catalog Code	Installation Type	UL Certification Required	UL Certification Not Required
8…10	T	Installed inside of any cabinet.	All devices listed on pages 68, 70, 72, and 74 are acceptable.	All devices listed on pages 68 through 74 are acceptable.

Fusing

If fuses are chosen as the desired protection method, see the recommended types listed below. If available amp ratings do not match the tables provided, the closest fuse rating that exceeds the drive rating should be chosen.

- IEC – BS88 (British Standard) Parts 1 & 2 (1), EN60269-1, Parts 1 & 2, type gG or equivalent should be used.
- UL – UL Class T, J or L should be used.

Circuit Breakers

The "non-fuse" listings in the following tables include both circuit breakers (inverse time or instantaneous trip). **If one of these is chosen as the desired protection method**, the following requirements apply.

- IEC and UL – Both types of devices are acceptable for IEC and UL installations.

(1) Typical designations include, but may not be limited to the following; Parts 1 & 2: AC, AD, BC, BD, CD, DD, ED, EFS, EF, FF, FG, GF, GG, GH.

400 Volt AC and 540 Volt DC Input Protection Devices - Frames 8…10

Applied Rating (1)	Equiv. Frame	Cont. Output Amps	Duty	Catalog Number	Quantity	Output Overload Amps		Continuous AC Input	AC Input Integral Semiconductor Fuse Size (170M) (2)	DC Unit to Unit Integral Semiconductor Fuse Size (170M)	AC Input Protection Devices Recommended for Branch Circuit Protection								DC Input Integral Semiconductor Fuse Size (170M) (8)
											Dual Element Time Delay Fuse			Non-Time Delay Fuse			Circuit Breaker Max Size (6)	Motor Circuit Protector (7)	
						1 min	3 s	Amps	Amps	Amps	1/Phase Min (4)	2/Phase Min (4)	Max (5)	1/Phase Min (4)	2/Phase Min (4)	Max (5)			Amps
400 Volt AC Input																			**540V DC Input**
200 kW	8	385	Heavy	20G11TC460	1	578	693	380	1100	–	500	–	850	500	–	1100	1100	500	1600
250 kW	8	460	Normal	20G11TC460	1	506	693	455	1100	–	600	–	1000	600	–	1300	1300	600	1600
		456	Heavy	20G11TC540	1	684	821	450	1100	–	600	–	1000	600	–	1300	1300	600	1600
		472	Heavy	20G11TC567	1	708	851	466	1100	–	600	–	1000	600	–	1400	1400	600	1600
315 kW	8	540	Light	20G11TC460	1	594	–	534	1100	–	700	350	1200	700	350	1600	1600	700	1600
		540	Normal	20G11TC540	1	594	821	533	1100	–	700	350	1200	700	350	1600	1600	700	1600
		540	Heavy	20G11TC650	1	810	975	533	1100	–	700	–	1200	700	–	1600	1600	700	1600
315 kW	8	585	Light	20G11TC540	1	644	–	578	1100	–	750	375	1300	750	375	1700	1700	800	1600
		567	Normal	20G11TC567	1	624	851	560	1100	–	750	375	1200	750	375	1700	1700	700	1600
		585	Heavy	20G11TC750	1	878	1125	577	1100	–	750	375	1300	750	375	1700	1700	800	1600
355 kW	8	612	Light	20G11TC567	1	673	–	604	1100	–	800	400	1300	800	400	1800	1800	800	1600
		650	Normal	20G11TC650	1	715	975	640	1100	–	850	425	1400	850	425	1900	1900	800	1600
		642	Heavy	20G11TC770	1	963	1155	634	1100	–	800	400	1400	800	400	1900	1900	800	1600
400 kW	8	750	Light	20G11TC650	1	825	–	739	1100	–	1000	500	1600	1000	500	2200	2200	1000	1600
		750	Normal	20G11TC750	1	825	1125	739	1100	–	1000	500	1600	1000	500	2200	2200	1000	1600
		770	Normal	20G11TC770	1	847	1155	758	1100	–	1000	500	1700	1000	500	2300	2300	1000	1600
450 kW	8	796	Light	20G11TC750	1	876	–	784	1100	–	1000	500	1700	1000	500	2300	2300	1000	1600
		832	Light	20G11TC770	1	915	–	819	1100	–	1100	550	1800	1100	550	2400	2400	1200	1600
		832	Light	20G11TC770	1	915	–	819	1100	–	1100	550	1800	1100	550	2400	2400	1200	1600
400 kW	9	750	Heavy	20G11TC460	2	1125	1365	739	1100	1400 (3)	900	450	1700	900	450	2200	2200	900	1600 (3)
500 kW	9	880	Heavy	20G11TC540	2	1320	1584	867	1100	1400 (3)	1100	550	2000	1100	550	2600	2600	1100	1600 (3)
		910	Heavy	20G11TC567	2	1365	1638	896	1100	1400 (3)	1100	550	2000	1100	550	2700	2700	1100	1600 (3)
		910	Normal	20G11TC460	2	1001	1365	896	1100	1400 (3)	1100	550	2000	1100	550	2700	2700	1100	1600 (3)
560 kW	9	1040	Light	20G11TC460	2	1144	–	1024	1100	1400 (3)	1300	650	2300	1300	650	3100	3100	1300	1600 (3)
		1040	Normal	20G11TC540	2	1144	1584	1024	1100	1400 (3)	1300	650	2300	1300	650	3100	3100	1300	1600 (3)
		1040	Heavy	20G11TC650	2	1560	1872	1024	1100	1400 (3)	1300	650	2300	1300	650	3100	3100	1300	1600 (3)
630 kW	9	1090	Light	20G11TC540	2	1199	–	1073	1100	1400 (3)	1350	675	2400	1350	675	3200	3200	1350	1600 (3)
		1090	Normal	20G11TC567	2	1199	1638	1073	1100	1400 (3)	1350	675	2400	1350	675	3200	3200	1350	1600 (3)
		1090	Heavy	20G11TC750	2	1635	2198	1073	1100	1400 (3)	1350	675	2400	1350	675	3200	3200	1350	1600 (3)

continued on page 69

Applied Rating (1)	Equiv. Frame	Cont. Output Amps	Duty	Catalog Number	Quantity	Output Overload Amps		Continuous AC Input	AC Input Integral Semiconductor Fuse Size (170M) (2)	DC Unit to Unit Integral Semiconductor Fuse Size (170M)	AC Input Protection Devices Recommended for Branch Circuit Protection								DC Input Integral Semiconductor Fuse Size (170M) (8)
											Dual Element Time Delay Fuse			Non-Time Delay Fuse			Circuit Breaker Max Size (6)	Motor Circuit Protector (7)	
						1 min	3 s	Amps	Amps	Amps	1/Phase Min (4)	2/Phase Min (4)	Max (5)	1/Phase Min (4)	2/Phase Min (4)	Max (5)			Amps
400 Volt AC Input (continued)																			**540V DC Input**
710 kW	9	1175	Light	20G11TC567	2	1293	–	1157	1100	1400 (3)	1450	725	2600	1450	725	3500	3500	1450	1600 (3)
		1175	Normal	20G11TC650	2	1293	1872	1157	1100	1400 (3)	1450	725	2600	1450	725	3500	3500	1450	1600 (3)
		1175	Heavy	20G11TC770	2	1763	2220	1157	1100	1400 (3)	1450	725	2600	1450	725	3500	3500	1450	1600 (3)
	10	1325	Heavy	20G11TC567	2	1988	2385	1305	1100	1400 (3)	1650	825	2900	1650	825	3900	3900	1650	1600 (3)
800 kW	9	1465	Light	20G11TC650	2	1612	–	1443	1100	1400 (3)	1800	900	3200	1800	900	4300	4300	1800	1600 (3)
		1465	Normal	20G11TC750	2	1612	2198	1443	1100	1400 (3)	1800	900	3200	1800	900	4300	4300	1800	1600 (3)
850 kW	9	1480	Light	20G11TC750	2	1628	–	1457	1100	1400 (3)	1800	900	3300	1800	900	4400	4400	1800	1600 (3)
		1480	Normal	20G11TC770	2	1628	2220	1457	1100	1400 (3)	1800	900	3300	1800	900	4400	4400	1800	1600 (3)
900 kW	9	1600	Light	20G11TC770	2	1760	–	1576	1100	1400 (3)	1950	975	3500	1950	975	4700	4700	1950	1600 (3)
	10	1590	Normal	20G11TC567	3	1749	2385	1566	1100	1400 (3)	1950	975	3500	1950	975	4700	4700	1950	1600 (3)
1000 kW	10	1715	Light	20G11TC567	3	1887	2058	1689	1100	1400 (3)	2100	1050	3800	2100	1050	5100	5100	2100	1600 (3)
		1800	Heavy	20G11TC770	3	2700	3240	1773	1100	1400 (3)	2200	1100	4000	2200	1100	5300	5300	2200	1600 (3)
1250 kW	10	2150	Normal	20G11TC770	3	2365	3240	2117	1100	1400 (3)	2650	1325	4800	2650	1325	6400	6400	2650	1600 (3)
1400 kW	10	2330	Light	20G11TC770	3	2563	2796	2294	1100	1400 (3)	2850	1425	5200	2850	1425	6900	6900	2850	1600 (3)

(1) "Applied Rating" refers to the motor that will be connected to the drive. For example, a "C460" drive can be used in Normal Duty mode on a 250 kW motor, in Heavy Duty mode on a 200 kW motor or in Light Duty mode on a 315 kW motor. The drive can be programmed for each mode. Wiring and fuses can be sized based on the programmed mode. For any given drive catalog number, Normal Duty mode provides higher continuous current but smaller overload current with respect to Heavy Duty mode. See parameter 306 [Duty Rating]. See Specifications for an explanation of Duty Ratings.

(2) These AC line fuses (with blown fuse indicators) are included in the drive to provide drive short circuit protection. AC input protection devices for branch circuit protection based on US NEC are listed in the table. Each drive bay has one fuse per phase.

(3) Each drive bay has one fuse per DC line.

(4) Minimum protection device size is the lowest rated device that supplies maximum protection without nuisance tripping.

(5) Maximum protection device size is the highest rated device that supplies drive protection. For US NEC, minimum size is 125% of motor FLA. Ratings shown are maximum.

(6) Circuit Breaker - inverse time breaker. For US NEC, minimum size is 125% of motor FLA. Ratings shown are maximum.

(7) Recommended Motor circuit protector - Instantaneous trip circuit breaker. The trip setting should be set to the input current of the drive and should be sized for the continuous current of the system.

(8) These DC line fuses (with blown fuse indicators) are included in the drive to provide drive short circuit protection.

480 Volt AC and 650 Volt DC Input Protection Devices - Frames 8…10

Applied Rating[1]	Equiv. Frame	Cont. Output Amps	Duty	Catalog Number	Quantity	Output Overload Amps		Continuous AC Input	AC Input Integral Semiconductor Fuse Size (170M)[2]	DC Bay to Bay Integral Semiconductor Fuse Size (170M)	AC Input Protection Devices Recommended for Branch Circuit Protection								DC Input Integral Semiconductor Fuse Size (170M)[8]
											Dual Element Time Delay Fuse			Non-Time Delay Fuse			Circuit Breaker Max Size[6]	Motor Circuit Protector[7]	
						1 min	3 s	Amps	Amps	Amps	1/Phase Min[4]	2/Phase Min[4]	Max[5]	1/Phase Min[4]	2/Phase Min[4]	Max[5]			Amps
480 Volt AC Input																			**650 Volt DC Input**
300 Hp	8	370	Heavy	20G11TD430	1	555	666	349	1100	–	450	–	800	450	–	1100	1100	450	1600
350 Hp	8	430	Normal	20G11TD430	1	473	666	406	1100	–	550	–	900	550	–	1200	1200	550	1600
		414	Heavy	20G11TD485	1	621	745	391	1100	–	500	–	900	500	–	1200	1200	500	1600
		454	Heavy	20G11TD545	1	681	818	428	1100	–	550	–	1000	550	–	1300	1300	550	1600
400 Hp	8	485	Light	20G11TD430	1	534	–	458	1100	–	600	–	1000	600	–	1400	1400	600	1600
		485	Normal	20G11TD485	1	534	745	458	1100	–	600	–	1000	600	–	1400	1400	600	1600
		485	Heavy	20G11TD617	1	728	926	458	1100	–	600	–	1000	600	–	1400	1400	600	1600
450 Hp	8	545	Light	20G11TD485	1	600	–	514	1100	–	650	–	1200	650	–	1600	1600	650	1600
		545	Normal	20G11TD545	1	600	818	514	1100	–	650	–	1200	650	–	1600	1600	650	1600
		545	Heavy	20G11TD710	1	818	1065	514	1100	–	650	325	1200	650	325	1600	1600	650	1600
500 Hp	8	590	Light	20G11TD54	1	649	–	557	1100	–	700	–	1300	700	–	1700	1700	700	1600
		617	Normal	20G11TD617	1	679	926	582	1100	–	750	325	1300	750	325	1800	1800	800	1600
		617	Heavy	20G11TD740	1	926	1110	582	1100	–	750	375	1300	750	375	2400	1800	800	1600
600 Hp	8	710	Light	20G11TD617	1	781	–	670	1100	–	850	425	1500	850	425	2100	2100	900	1600
		710	Normal	20G11TD710	1	781	1065	670	1100	–	850	425	1500	850	425	2100	2100	900	1600
650 Hp	8	765	Light	20G11TD710	1	842	–	722	1100	–	1000	500	1700	1000	500	2200	2200	1000	1600
		740	Normal	20G11TD740	1	814	1110	698	1100	–	900	450	1600	900	450	2200	2200	900	1600
700 Hp	8	800	Light	20G11TD740	1	880	–	755	1100	–	1000	500	1800	1000	500	1800	2400	1000	1600
600 Hp	9	710	Heavy	20G11TD430	2	1065	1278	670	1100	1400[3]	850	425	1500	850	425	2000	2000	850	1600[3]
700 Hp	9	795	Heavy	20G11TD485	2	1193	1440	750	1100	1400[3]	950	475	1700	950	475	2300	2300	950	1600[3]
		800	Normal	20G11TD430	2	880	1278	755	1100	1400[3]	950	475	1700	950	475	2300	2300	950	1600[3]
750 Hp	9	800	Heavy	20G11TD545	2	1200	1568	755	1100	1400[3]	950	475	1700	950	475	2300	2300	950	1600[3]
800 Hp	9	960	Light	20G11TD430	2	1056	–	906	1100	1400[3]	1150	575	2000	1150	575	2700	2700	1150	1600[3]
		960	Normal	20G11TD485	2	1056	1440	906	1100	1400[3]	1150	575	2000	1150	575	2700	2700	1150	1600[3]
		960	Heavy	20G11TD617	2	1440	1728	906	1100	1400[3]	1150	575	2000	1150	575	2700	2700	1150	1600[3]
900 Hp	9	1045	Light	20G11TD485	2	1150	–	986	1100	1400[3]	1250	625	2200	1250	625	3000	3000	1250	1600[3]
		1045	Normal	20G11TD545	2	1150	1568	986	1100	1400[3]	1250	625	2200	1250	625	3000	3000	1250	1600[3]
		1045	Heavy	20G11TD710	2	1568	2048	986	1100	1400[3]	1250	625	2200	1250	625	3000	3000	1250	1600[3]

continued on page 71

Applied Rating[1]	Equiv. Frame	Cont. Output Amps	Duty	Catalog Number	Quantity	Output Overload Amps		Continuous AC Input	AC Input Integral Semiconductor Fuse Size (170M)[2]	DC Bay to Bay Integral Semiconductor Fuse Size (170M)	AC Input Protection Devices Recommended for Branch Circuit Protection								DC Input Integral Semiconductor Fuse Size (170M)[8]
											Dual Element Time Delay Fuse			Non-Time Delay Fuse			Circuit Breaker Max Size[6]	Motor Circuit Protector[7]	
						1 min	3 s	Amps	Amps	Amps	1/Phase Min[4]	2/Phase Min[4]	Max[5]	1/Phase Min[4]	2/Phase Min[4]	Max[5]			Amps
480 Volt AC Input (continued)																			**650 Volt DC Input**
1000 Hp	9	1135	Light	20G11TD545	2	1249	–	1071	1100	1400[3]	1350	675	2400	1350	675	3200	3200	1350	1600[3]
		1135	Normal	20G11TD617	2	1249	1728	1071	1100	1400[3]	1350	675	2400	1350	675	3200	3200	1350	1600[3]
		1135	Heavy	20G11TD740	2	1703	2130	1071	1100	1400[3]	1350	675	2400	1350	675	3200	3200	1350	1600[3]
1100 Hp	9	1365	Light	20G11TD617	2	1502	–	1288	1100	1400[3]	1600	800	2900	1600	800	3900	3900	1600	1600[3]
		1365	Normal	20G11TD710	2	1502	2048	1288	1100	1400[3]	1600	800	2900	1600	800	3900	3900	1600	1600[3]
	10	1270	Heavy	20G11TD545	2	1905	2288	1199	1100	1400[3]	1500	750	2700	1500	750	3600	3600	1500	1600[3]
1250 Hp	9	1420	Light	20G11TD710	2	1562	–	1340	1100	1400[3]	1700	850	3000	1700	850	4000	4000	1700	1600[3]
		1420	Normal	20G11TD740	2	1562	2130	1340	1100	1400[3]	1700	850	3000	1700	850	4000	4000	1700	1600[3]
1350 Hp	9	1540	Light	20G11TD740	2	1694	–	1453	1100	1400[3]	1800	900	3300	1800	900	4400	4400	1800	1600[3]
	10	1525	Normal	20G11TD545	3	1678	2288	1439	1100	1400[3]	1800	900	3200	1800	900	4300	4300	1800	1600[3]
1500 Hp	10	1655	Light	20G11TD545	3	1821	1986	1562	1100	1400[3]	1950	975	3500	1950	975	4700	4700	1950	1600[3]
1650 Hp	10	1730	Heavy	20G11TD740	3	2595	3114	1633	1100	1400[3]	2050	1025	3700	2050	1025	4900	4900	2050	1600[3]
1750 Hp	10	2070	Normal	20G11TD740	3	2277	3114	1953	1100	1400[3]	2450	1225	4400	2450	1225	5900	5900	2450	1600[3]
2000 Hp	10	2240	Light	20G11TD740	3	2464	2688	2114	1100	1400[3]	2650	1325	4800	2650	1325	6300	6300	2650	1600[3]

(1) "Applied Rating" refers to the motor that will be connected to the drive. For example, a "D430" drive can be used in Normal Duty mode on a 350 Hp motor, in Heavy Duty mode on a 300 Hp motor or in Light Duty mode on a 400 Hp motor. The drive can be programmed for each mode. Wiring and fuses can be sized based on the programmed mode. For any given drive catalog number, Normal Duty mode provides higher continuous current but smaller overload current with respect to Heavy Duty mode. See parameter 306 [Duty Rating]. See Specifications for an explanation of Duty Ratings.

(2) These AC line fuses (with blown fuse indicators) are included in the drive to provide drive short circuit protection. AC input protection devices for branch circuit protection based on US NEC are listed in the table. Each drive bay has one fuse per phase.

(3) Each drive bay has one fuse per DC line.

(4) Minimum protection device size is the lowest rated device that supplies maximum protection without nuisance tripping.

(5) Maximum protection device size is the highest rated device that supplies drive protection. For US NEC, minimum size is 125% of motor FLA. Ratings shown are maximum.

(6) Circuit Breaker - inverse time breaker. For US NEC, minimum size is 125% of motor FLA. Ratings shown are maximum.

(7) Recommended Motor circuit protector - Instantaneous trip circuit breaker. The trip setting should be set to the input current of the drive and should be sized for the continuous current of the system.

(8) These DC line fuses (with blown fuse indicators) are included in the drive to provide drive short circuit protection.

600 Volt AC and 810V DC Input Protection Devices - Frames 8 . . . 10

Applied Rating[1]	Equiv. Frame	Cont. Output Amps	Duty	Catalog Number	Quantity	Output Overload Amps		Continuous AC Input	AC Input Integral Semiconductor Fuse Size (170M)[2]	DC Bay to Bay Integral Semiconductor Fuse Size (170M6648)	AC Input Protection Devices Recommended for Branch Circuit Protection								DC Input Integral Semiconductor Fuse Size (170M6253)[7]
											Dual Element Time Delay Fuse			Non-Time Delay Fuse			Circuit Breaker Max Size[5]	Motor Circuit Protector[6]	
						1 min	3 s	Amps	Amps	Amps	1/Phase Min[3]	2/Phase Min[3]	Max[4]	1/Phase Min[3]	2/Phase Min[3]	Max[4]			Amps
600 Volt AC Input																			**810V DC Input**
250 Hp	8	272	Heavy	20G11TE295	1	408	490	257	900	–	350	175	600	350	175	800	800	350	1000
300 Hp	8	295	Heavy	20G11TE355	1	443	533	278	900	–	350	175	700	350	175	900	900	350	1000
		295	Normal	20G11TE295	1	325	490	302	900	–	400	200	700	400	200	1000	1000	400	1000
350 Hp	8	355	Light	20G11TE295	1	391	–	335	900	–	450	225	800	450	225	1100	1100	450	1000
		355	Normal	20G11TE355	1	391	533	335	900	–	450	225	800	450	225	1100	1100	450	1000
		329	Heavy	20G11TE395	1	494	593	310	900	–	400	200	700	400	200	1000	1000	400	1000
		355	Heavy	20G11TE435	1	533	639	335	900	–	450	225	800	450	225	1100	1100	450	1000
400 Hp	8	395	Light	20G11TE355	1	435	–	373	900	–	500	250	900	500	250	1200	1200	500	1000
		395	Normal	20G11TE395	1	435	593	373	900	–	500	250	900	500	250	1200	1200	500	1000
		395	Heavy	20G11TE460	1	593	711	373	900	–	500	250	900	500	250	1200	1200	500	1000
450 Hp	8	435	Light	20G11TE395	1	479	–	411	900	–	550	275	1000	550	275	1300	1300	550	1000
		435	Normal	20G11TE435	1	479	639	396	900	–	500	250	900	500	250	1200	1200	500	1000
		425	Heavy	20G11TE510	1	638	765	401	900	–	550	275	1000	550	275	1300	1300	550	1000
500 Hp	8	460	Light	20G11TE435	1	506	–	429	900	–	550	275	1000	550	275	1300	1300	550	1000
		510	Light	20G11TE460	1	561	–	481	900	–	650	325	1100	650	325	1500	1500	650	1000
		460	Normal	20G11TE460	1	506	711	429	900	–	550	275	1000	550	275	1300	1300	550	1000
		510	Normal	20G11TE510	1	561	765	481	900	–	650	325	1100	650	325	1500	1500	650	1000
550 Hp	8	545	Light	20G11TE510	1	600	–	514	900	–	650	325	1200	650	325	1600	1600	650	1000
500 Hp	9	510	Heavy	20G11TE295	2	765	918	481	900	1000	600	300	1100	600	300	1400	1400	600	1000
600 Hp	9	595	Heavy	20G11TE355	2	893	1071	562	900	1000	700	350	1300	700	350	1700	1700	700	1000
		595	Normal	20G11TE295	2	655	918	562	900	1000	700	350	1300	700	350	1700	1700	700	1000
700 Hp	9	630	Heavy	20G11TE395	2	945	1149	595	900	1000	750	375	1300	750	375	1800	1800	750	1000
		630	Normal	20G11TE355	2	693	1071	595	900	1000	750	375	1300	750	375	1800	1800	750	1000
		595	Light	20G11TE295	2	693	–	651	900	1000	800	400	1500	800	400	2000	2000	800	1000
750 Hp	9	700	Heavy	20G11TE435	2	1050	1260	661	900	1000	850	425	1500	850	425	2000	2000	850	1000
800 Hp	9	760	Heavy	20G11TE460	2	1140	1368	717	900	1000	900	450	1600	900	450	2200	2200	900	1000
		760	Normal	20G11TE395	2	836	1140	717	900	1000	900	450	1600	900	450	2200	2200	900	1000
		760	Light	20G11TE355	2	836	–	717	900	1000	900	450	1600	900	450	2200	2200	900	1000

continued on page 73

Applied Rating[1]	Equiv. Frame	Cont. Output Amps	Duty	Catalog Number	Quantity	Output Overload Amps		Continuous AC Input	AC Input Integral Semiconductor Fuse Size (170M)[2]	DC Bay to Bay Integral Semiconductor Fuse Size (170M6648)	AC Input Protection Devices Recommended for Branch Circuit Protection								DC Input Integral Semiconductor Fuse Size (170M6253)[7]
											Dual Element Time Delay Fuse			Non-Time Delay Fuse			Circuit Breaker Max Size[5]	Motor Circuit Protector[6]	
						1 min	3 s	Amps	Amps	Amps	1/Phase Min[3]	2/Phase Min[3]	Max[4]	1/Phase Min[3]	2/Phase Min[3]	Max[4]			Amps
600 Volt AC Input (continued)																			**810V DC Input**
900 Hp	9	815	Heavy	20G11TE980	2	1223	1470	769	900	1000	950	475	1700	950	475	2300	2300	950	1000
		825	Normal	20G11TE435	2	908	1260	779	900	1000	950	475	1800	950	475	2300	2300	950	1000
		835	Light	20G11TE395	2	919	–	788	900	1000	1000	500	1800	1000	500	2400	2400	1000	1000
950 Hp	9	900	Normal	20G11TE460	2	990	1368	849	900	1000	1050	525	1900	1050	525	2500	2500	1050	1000
		900	Light	20G11TE435	2	990	–	849	900	1000	1050	525	1900	1050	525	2500	2500	1050	1000
1000 Hp	9	980	Normal	20G11TE980	2	1078	1470	925	900	1000	1150	575	2100	1150	575	2800	2800	1150	1000
		980	Light	20G11TE460	2	1078	–	925	900	1000	1150	575	2100	1150	575	2800	2800	1150	1000
	10	920	Heavy	20G11TE395	3	1380	1665	868	900	1000	1100	550	2000	1100	550	2600	2600	1100	1000
1100 Hp	9	1045	Light	20G11TE980	2	1150	–	986	900	1000	1250	625	2200	1250	625	3000	3000	1250	1000
	10	1110	Normal	20G11TE395	3	1221	1665	1048	900	1000	1300	650	2400	1300	650	3100	3100	3100	1000
1200 Hp	10	1220	Light	20G11TE395	3	1342	1464	1151	900	1000	1450	725	2600	1450	725	3500	3500	3500	1000
1250 Hp	10	1190	Heavy	20G11TE510	3	1785	2145	1123	900	1000	1400	700	2500	1400	700	3400	3400	3400	1000
1400 Hp	10	1430	Normal	20G11TE510	3	1573	2145	1350	900	1000	1700	850	3000	1700	850	4100	4100	4100	1000
1500 Hp	10	1530	Light	20G11TE510	3	1683	1836	1444	900	1000	1800	900	3200	1800	900	4300	4300	4300	1000

(1) "Applied Rating" refers to the motor that will be connected to the drive. For example, a "E420" drive can be used in Normal Duty mode on a 450 Hp motor, in Heavy Duty mode on a 350 Hp motor or in Light Duty mode on a 500 Hp motor. The drive can be programmed for each mode. Wiring and fuses can be sized based on the programmed mode. For any given drive catalog number, Normal Duty mode provides higher continuous current but smaller overload current with respect to Heavy Duty mode. See parameter 306 [Duty Rating]. See Specifications for an explanation of Duty Ratings.

(2) These AC line fuses (with blown fuse indicators) are included in the drive to provide drive short circuit protection. AC input protection devices for branch circuit protection based on US NEC are listed in the table. Each drive bay has one fuse per phase.

(3) Minimum protection device size is the lowest rated device that supplies maximum protection without nuisance tripping.

(4) Maximum protection device size is the highest rated device that supplies drive protection. For US NEC, minimum size is 125% of motor FLA. Ratings shown are maximum.

(5) Circuit Breaker - inverse time breaker. For US NEC, minimum size is 125% of motor FLA. Ratings shown are maximum.

(6) Recommended Motor circuit protector - Instantaneous trip circuit breaker. The trip setting should be set to the input current of the drive and should be sized for the continuous current of the system.

(7) These DC line fuses (with blown fuse indicators) are included in the drive to provide drive short circuit protection.

690 Volt AC and 932V DC Input Protection Devices - Frames 8 . . . 10

Applied Rating[1]	Equiv. Frame	Cont. Output Amps	Duty	Catalog Number	Quantity	Output Overload Amps		Continuous AC Input	AC Input Integral Semiconductor Fuse Size (170M)[2]	DC Bay to Bay Integral Semiconductor Fuse Size (170M6648)	AC Input Protection Devices Recommended for Branch Circuit Protection								DC Input Integral Semiconductor Fuse Size (170M6253)[7]
											Dual Element Time Delay Fuse			Non-Time Delay Fuse			Circuit Breaker Max Size[5]	Motor Circuit Protector[6]	
						1 min	3 s	Amps	Amps	Amps	1/Phase Min[3]	2/Phase Min[3]	Max[4]	1/Phase Min[3]	2/Phase Min[3]	Max[4]			Amps
690 Volt AC Input																			**932V DC Input**
200 kW	8	215	Heavy	20G11TF265	1	323	375	188	900	–	250	125	500	250	125	600	600	250	1000
250 kW	8	265	Normal	20G11TF265	1	292	375	235	900	–	300	150	600	300	150	800	800	300	1000
		265	Heavy	20G11TF330	1	398	473	235	900	–	300	150	600	300	150	800	800	300	1000
300 kW	8	308	Heavy	20G11TF370	1	462	555	290	900	–	400	200	700	400	200	900	900	400	1000
315 kW	8	330	Light	20G11TF265	1	363	–	297	900	–	400	200	700	400	200	900	900	400	1000
		330	Normal	20G11TF330	1	363	473	297	900	–	400	200	700	400	200	900	900	400	1000
355 kW	8	370	Light	20G11TF330	1	407	–	349	900	–	450	225	800	450	225	1100	1100	450	1000
		370	Normal	20G11TF370	1	407	555	349	900	–	450	225	800	450	225	1100	1100	450	1000
		370	Heavy	20G11TF415	1	555	639	334	900	–	450	225	800	450	225	1100	1100	450	1000
375 kW	8	375	Heavy	20G11TF460	1	563	675	353	900	–	450	225	800	450	225	1100	1100	450	1000
400 kW	8	410	Light	20G11TF370	1	451	–	386	900	–	500	250	900	500	250	1200	1200	500	1000
		415	Normal	20G11TF415	1	457	639	377	900	–	500	250	900	500	250	1200	1200	500	1000
		413	Heavy	20G11TF500	1	620	750	389	900	–	500	250	900	500	250	1200	1200	500	1000
450 kW	8	460	Light	20G11TF415	1	506	–	424	900	–	550	275	1000	550	275	1300	1300	550	1000
		460	Normal	20G11TF460	1	506	675	424	900	–	550	275	1000	550	275	1300	1300	550	1000
500 kW	8	500	Light	20G11TF460	1	550	–	471	900	–	600	300	1100	600	300	1500	1500	600	1000
		500	Normal	20G11TF500	1	550	750	471	900	–	600	300	1100	600	300	1500	1500	600	1000
530 kW	8	530	Light	20G11TF500	1	583	–	499	900	–	650	325	1200	650	325	1500	1500	650	1000
450 kW	9	460	Heavy	20G11TF265	2	690	885	433	900	1000	550	275	1000	550	275	1300	1300	550	1000
500 kW	9	500	Heavy	20G11TF330	2	750	975	471	900	1000	600	300	1100	600	300	1400	1400	600	1000
560 kW	9	590	Heavy	20G11TF370	2	885	1065	556	900	1000	700	350	1300	700	350	1700	1700	700	1000
		590	Normal	20G11TF265	2	649	885	556	900	1000	700	350	1300	700	350	1700	1700	700	1000
630 kW	9	650	Heavy	20G11TF415	2	975	1170	612	900	1000	750	375	1400	750	375	1800	1800	750	1000
		650	Normal	20G11TF330	2	715	975	612	900	1000	750	375	1400	750	375	1800	1800	750	1000
		650	Light	20G11TF265	2	715	–	612	900	1000	750	375	1400	750	375	1800	1800	750	1000
710 kW	9	750	Heavy	20G11TF460	2	1125	1350	706	900	1000	900	450	1600	900	450	2100	2100	900	1000
		710	Normal	20G11TF370	2	781	1065	706	900	1000	900	450	1600	900	450	2100	2100	900	1000
		710	Light	20G11TF330	2	781	–	706	900	1000	900	450	1600	900	450	2100	2100	900	1000
750 kW	9	765	Normal	20G11TF415	2	842	1170	721	900	1000	900	450	1600	900	450	2200	2200	900	1000

continued on page 75

Applied Rating (1)	Equiv. Frame	Cont. Output Amps	Duty	Catalog Number	Quantity	Output Overload Amps		Continuous AC Input	AC Input Integral Semiconductor Fuse Size (170M) (2)	DC Bay to Bay Integral Semiconductor Fuse Size (170M6648)	AC Input Protection Devices Recommended for Branch Circuit Protection								DC Input Integral Semiconductor Fuse Size (170M6253) (7)
											Dual Element Time Delay Fuse			Non-Time Delay Fuse			Circuit Breaker Max Size (5)	Motor Circuit Protector (6)	
						1 min	3 s	Amps	Amps	Amps	1/Phase Min (3)	2/Phase Min (3)	Max (4)	1/Phase Min (3)	2/Phase Min (3)	Max (4)			Amps
690 Volt AC Input (continued)																			**932V DC Input**
800 kW	9	795	Heavy	20G11TF960	2	1193	1440	749	900	1000	950	475	1700	950	475	2200	2200	950	1000
		795	Normal	20G11TF460	2	875	1350	749	900	1000	950	475	1700	950	475	2200	2200	950	1000
		790	Light	20G11TF370	2	869	–	744	900	1000	950	475	1700	950	475	2200	2200	950	1000
850 kW	9	860	Light	20G11TF415	2	946	–	810	900	1000	1000	500	1800	1000	500	2400	2400	1000	1000
900 kW	9	960	Normal	20G11TF960	2	1056	1440	904	900	1000	1150	575	2000	1150	575	2700	2700	1150	1000
		960	Light	20G11TF460	2	1056	–	904	900	1000	1150	575	2000	1150	575	2700	2700	1150	1000
	10	865	Heavy	20G11TF370	3	1298	1560	815	900	1000	1000	500	1800	1000	500	2400	2400	1000	1000
1000 kW	9	1020	Light	20G11TF460	2	1122	–	961	900	1000	1200	600	2200	1200	600	2900	2900	1200	1000
	10	1040	Normal	20G11TF370	3	1144	1560	980	900	1000	1250	625	2200	1250	625	2900	2900	1250	1000
1100 kW	10	1150	Light	20G11TF370	3	1265	1380	1083	900	1000	1350	675	2400	1350	675	3200	3200	1350	1000
1120 kW	10	1160	Heavy	20G11TF500	3	1740	2100	1093	900	1000	1350	675	2500	1350	675	3300	3300	1350	1000
1400 kW	10	1400	Normal	20G11TF500	3	1540	2100	1319	900	1000	1650	825	3000	1650	825	4000	4000	1650	1000
1500 kW	10	1485	Light	20G11TF500	3	1634	1782	1399	900	1000	1750	875	3100	1750	875	4200	4200	1750	1000

(1) "Applied Rating" refers to the motor that will be connected to the drive. For example, a "F400" drive can be used in Normal Duty mode on a 400 kW motor, in Heavy Duty mode on a 355 kW motor or in Light Duty mode on a 450 kW motor. The drive can be programmed for each mode. Wiring and fuses can be sized based on the programmed mode. For any given drive catalog number, Normal Duty mode provides higher continuous current but smaller overload current with respect to Heavy Duty mode. See parameter 306 [Duty Rating]. See Specifications for an explanation of Duty Ratings.

(2) These AC line fuses (with blown fuse indicators) are included in the drive to provide drive short circuit protection. AC input protection devices for branch circuit protection based on US NEC are listed in the table. Each drive bay has one fuse per phase.

(3) Minimum protection device size is the lowest rated device that supplies maximum protection without nuisance tripping.

(4) Maximum protection device size is the highest rated device that supplies drive protection. For US NEC, minimum size is 125% of motor FLA. Ratings shown are maximum.

(5) Circuit Breaker - inverse time breaker. For US NEC, minimum size is 125% of motor FLA. Ratings shown are maximum.

(6) Recommended Motor circuit protector - Instantaneous trip circuit breaker. The trip setting should be set to the input current of the drive and should be sized for the continuous current of the system.

(7) These DC line fuses (with blown fuse indicators) are included in the drive to provide drive short circuit protection.

Additional Resources

These documents contain additional information concerning related products from Rockwell Automation.

Resource	Description
PowerFlex 750-Series AC Drives Installation Instructions, publication 750-IN001	Explains the basic steps for mechanical installation, and provides instructions on how to connect incoming power, the motor, and basic I/O to the PowerFlex 750-Series Adjustable Frequency AC drive.
PowerFlex 750-Series AC Drives Programming Manual, publication 750-PM001	Provides basic information on how to install, start up, and troubleshoot PowerFlex® 750-Series Adjustable Frequency AC Drives.
PowerFlex 755 AC Drives Hardware Service Manual, publication 750-TG001	Provides a recommended preventative maintenance schedule, major component test and hardware replacement procedures, and schematic diagrams for floor mount frame 8 and larger PowerFlex® 750-Series AC drives.
PowerFlex 750-Series AC Drives Technical Data, publication 750-TD001	Includes information about certifications, specifications, and design considerations for the 750-Series AC Drives. Also includes information about fuse and circuit breaker ratings, cable considerations, motor considerations, dimensions and weights, and drive options.
Wiring and Grounding Guidelines for Pulse-width Modulated (PWM) AC Drives Installation Instructions, publication DRIVES-IN001	Provides basic information on how to install, protect, wire, and ground pulse-width modulated (PWM) AC drives.
Drives in Common Bus Configurations Application Guidelines, publication DRIVES-AT002	Provides guidelines, considerations, and limitations for the proper application of PowerFlex drives when they are used in common bus configurations.
Safety Guidelines for the Application, Installation, and Maintenance of Solid-State Control, publication SGI-1.1	Provides general guidelines for the application, installation, and maintenance of solid-state control in the form of individual devices or packaged assemblies incorporating solid-state components.
Industrial Automation Wiring and Grounding Guidelines, publication 1770-4.1	Provides general guidelines for installing a Rockwell Automation industrial system.
Product Certifications website, http://www.rockwellautomation.com/global/certification/overview.page	Provides declarations of conformity, certificates, and other certification details.

You can view or download publications at http://www.rockwellautomation.com/global/literature-library/overview.page. To order paper copies of technical documentation, contact your local Allen-Bradley distributor or Rockwell Automation sales representative.

Notes:

Rockwell Automation Support

Use the following resources to access support information.

Technical Support Center	Knowledgebase Articles, How-to Videos, FAQs, Chat, User Forums, and Product Notification Updates.	https://rockwellautomation.custhelp.com/
Local Technical Support Phone Numbers	Locate the phone number for your country.	http://www.rockwellautomation.com/global/support/get-support-now.page
Direct Dial Codes	Find the Direct Dial Code for your product. Use the code to route your call directly to a technical support engineer.	http://www.rockwellautomation.com/global/support/direct-dial.page
Literature Library	Installation Instructions, Manuals, Brochures, and Technical Data.	http://www.rockwellautomation.com/global/literature-library/overview.page
Product Compatibility and Download Center (PCDC)	Get help determining how products interact, check features and capabilities, and find associated firmware.	http://www.rockwellautomation.com/global/support/pcdc.page

Documentation Feedback

Your comments will help us serve your documentation needs better. If you have any suggestions on how to improve this document, complete the How Are We Doing? form at http://literature.rockwellautomation.com/idc/groups/literature/documents/du/ra-du002_-en-e.pdf.

Rockwell Automation maintains current product environmental information on its website at http://www.rockwellautomation.com/rockwellautomation/about-us/sustainability-ethics/product-environmental-compliance.page.

Allen-Bradley, DPI, PowerFlex, Rockwell Automation, Rockwell Software, and SCANport are trademarks of Rockwell Automation, Inc.
EtherNet/IP is a trademark of ODVA, Inc.
Trademarks not belonging to Rockwell Automation are property of their respective companies.

Rockwell Otomasyon Ticaret A.Ş., Kar Plaza İş Merkezi E Blok Kat:6 34752 İçerenköy, İstanbul, Tel: +90 (216) 5698400

www.rockwellautomation.com

Power, Control and Information Solutions Headquarters

Americas: Rockwell Automation, 1201 South Second Street, Milwaukee, WI 53204-2496 USA, Tel: (1) 414.382.2000, Fax: (1) 414.382.4444
Europe/Middle East/Africa: Rockwell Automation NV, Pegasus Park, De Kleetlaan 12a, 1831 Diegem, Belgium, Tel: (32) 2 663 0600, Fax: (32) 2 663 0640
Asia Pacific: Rockwell Automation, Level 14, Core F, Cyberport 3, 100 Cyberport Road, Hong Kong, Tel: (852) 2887 4788, Fax: (852) 2508 1846

PN-423761

Publication 750-IN020D-EN-P - May 2017
Supersedes Publication 750-IN020C-EN-P - May 2012

Copyright © 2017 Rockwell Automation, Inc. All rights reserved. Printed in the U.S.A.