Installation Instructions

Allen-Bradley

FLEX I/O 4-Channel Pulse Counter Module

Catalog number 1794-IP4 Series B

Table of Contents

Topic	Page
Important User Information	2
Environment and Enclosure	3
Preventing Electrostatic Discharge	3
North American Hazardous Location Approval	4
Install Your Pulse Counter Module	6
Configure Your Module	12
Specifications	16

Important User Information

Solid-state equipment has operational characteristics differing from those of electromechanical equipment. Safety Guidelines for the Application, Installation, and Maintenance of Solid-State Controls (Publication SGI-1.1 available from your local Rockwell Automation Sales Office or online at http://www.rockwellautomation.com/literature/) describes some important differences between solid-state equipment and hard-wired electromechanical devices. Because of this difference, and also because of the wide variety of uses for solid-state equipment, all persons responsible for applying this equipment must satisfy themselves that each intended application of this equipment is acceptable.

In no event will Rockwell Automation, Inc. be responsible or liable for indirect or consequential damages resulting from the use or application of this equipment.

The examples and diagrams in this manual are included solely for illustrative purposes. Because of the many variables and requirements associated with any particular installation, Rockwell Automation, Inc. cannot assume responsibility or liability for actual use based on the examples and diagrams.

No patent liability is assumed by Rockwell Automation, Inc. with respect to use of information, circuits, equipment, or software described in this manual.

Reproduction of the contents of this manual, in whole or in part, without written permission of Rockwell Automation, Inc., is prohibited.

Throughout this manual, when necessary, we use notes to make you aware of safety considerations.

	WARNING: Identifies information about practices or circumstances that can cause an explosion in a hazardous environment, which may lead to personal injury or death, property damage, or economic loss.
	ATTENTION: Identifies information about practices or circumstances that can lead to personal injury or death, property damage, or economic loss. Attentions help you identify a hazard, avoid a hazard, and recognize the consequences.
	SHOCK HAZARD: Labels may be on or inside the equipment (for example, drive or motor) to alert people that dangerous voltage may be present.
	BURN HAZARD: Labels may be on or inside the equipment (for example, drive or motor) to alert people that surfaces may reach dangerous temperatures.
IMPORTANT	Identifies information that is critical for successful application and understanding of the product.

Environment and Enclosure

ATTENTION: This equipment is intended for use in a Pollution Degree 2 industrial environment, in overvoltage Category II applications (as defined in IEC publication 60664-1), at altitudes up to 2000 m (6562 ft) without derating.

This equipment is considered Group 1, Class A industrial equipment according to IEC/CISPR Publication 11. Without appropriate precautions, there may be potential difficulties ensuring electromagnetic compatibility in other environments due to conducted as well as radiated disturbance.

This equipment is supplied as open-type equipment. It must be mounted within an enclosure that is suitably designed for those specific environmental conditions that will be present and appropriately designed to prevent personal injury resulting from accessibility to live parts. The interior of the enclosure must be accessible only by the use of a tool. Subsequent sections of this publication may contain additional information regarding specific enclosure type ratings that are required to comply with certain product safety certifications.

In addition to this publication, see:

- Industrial Automation Wiring and Grounding Guidelines, Rockwell Automation publication 1770-4.1, for additional installation requirements.
- NEMA Standard 250 and IEC 60529, as applicable, for explanations of the degrees of protection provided by different types of enclosure.

Preventing Electrostatic Discharge

ATTENTION: This equipment is sensitive to electrostatic discharge, which can cause internal damage and affect normal operation. Follow these guidelines when you handle this equipment:

- Touch a grounded object to discharge potential static.
- Wear an approved grounding wriststrap.
- Do not touch connectors or pins on component boards.
- Do not touch circuit components inside the equipment.
- Use a static-safe workstation, if available.

North American Hazardous Location Approval

The following modules are North American Hazardous Location approved: 1794-IP4 Series B.

The following information applies when operating this equipment in hazardous locations:	**Informations sur l'utilisation de cet équipement en environnements dangereux:**
Products marked "CL I, DIV 2, GP A, B, C, D" are suitable for use in Class I Division 2 Groups A, B, C, D, Hazardous Locations and nonhazardous locations only. Each product is supplied with markings on the rating nameplate indicating the hazardous location temperature code. When combining products within a system, the most adverse temperature code (lowest "T" number) may be used to help determine the overall temperature code of the system. Combinations of equipment in your system are subject to investigation by the local Authority Having Jurisdiction at the time of installation.	Les produits marqués "CL I, DIV 2, GP A, B, C, D" ne conviennent qu'à une utilisation en environnements de Classe I Division 2 Groupes A, B, C, D dangereux et non dangereux. Chaque produit est livré avec des marquages sur sa plaque d'identification qui indiquent le code de température pour les environnements dangereux. Lorsque plusieurs produits sont combinés dans un système, le code de température le plus défavorable (code de température le plus faible) peut être utilisé pour déterminer le code de température global du système. Les combinaisons d'équipements dans le système sont sujettes à inspection par les autorités locales qualifiées au moment de l'installation.
EXPLOSION HAZARD • Do not disconnect equipment unless power has been removed or the area is known to be nonhazardous. • Do not disconnect connections to this equipment unless power has been removed or the area is known to be nonhazardous. Secure any external connections that mate to this equipment by using screws, sliding latches, threaded connectors, or other means provided with this product. • Substitution of components may impair suitability for Class I, Division 2. • If this product contains batteries, they must only be changed in an area known to be nonhazardous.	**RISQUE D'EXPLOSION** • Couper le courant ou s'assurer que l'environnement est classé non dangereux avant de débrancher l'équipement. • Couper le courant ou s'assurer que l'environnement est classé non dangereux avant de débrancher les connecteurs. Fixer tous les connecteurs externes reliés à cet équipement à l'aide de vis, loquets coulissants, connecteurs filetés ou autres moyens fournis avec ce produit. • La substitution de composants peut rendre cet équipement inadapté à une utilisation en environnement de Classe I, Division 2. • S'assurer que l'environnement est classé non dangereux avant de changer les piles.

ATTENTION: FLEX™ I/O is grounded through the DIN rail to chassis ground. Use zinc plated yellow-chromate steel DIN rail to assure proper grounding. The use of other DIN rail materials (for example, aluminum or plastic) that can corrode, oxidize, or are poor conductors, can result in improper or intermittent grounding.

WARNING: If you insert or remove the module while backplane power is on, an electrical arc can occur. This could cause an explosion in hazardous location installations. Be sure that power is removed or the area is nonhazardous before proceeding. Repeated electrical arcing causes excessive wear to contacts on both the module and its mating connector. Worn contacts may create electrical resistance that can affect module operation.

WARNING: If you connect or disconnect wiring while the field-side power is on, an electrical arc can occur. This could cause an explosion in hazardous location installations. Be sure that power is removed or the area is nonhazardous before proceeding.

Install Your Pulse Counter Module

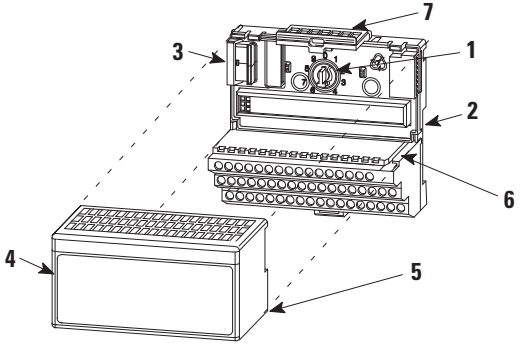

	Description		Description
1	Keyswitch	5	Alignment bar
2	Terminal base	6	Groove
3	Flexbus connector	7	Latching mechanism
4	Module		

The module mounts on a 1794 terminal base.

ATTENTION: During mounting of all devices, be sure that all debris (metal chips, wire strands, etc.) is kept from falling into the module. Debris that falls into the module could cause damage on power up.

1. Rotate the keyswitch (1) on the terminal base (2) clockwise to position 1 as required for this type of module.
2. Make certain the flexbus connector (3) is pushed all the way to the left to connect with the neighboring terminal base/adapter. **You cannot install the module unless the connector is fully extended**.

3. Make sure the pins on the bottom of the module are straight so they will align properly with the connector in the terminal base.

WARNING: If you insert or remove the module while backplane power is on, an electrical arc can occur. This could cause an explosion in hazardous location installations. Be sure that power is removed or the area is nonhazardous before proceeding.

4. Position the module (4) with its alignment bar (5) aligned with the groove (6) on the terminal base.
5. Press firmly and evenly to seat the module in the terminal base unit. The module is seated when the latching mechanism (7) is locked into the module.

Connecting Wiring for the 1794-IP4 Module

(using a 1794-TB2, 1794-TB3, or 1794-TB3S terminal base unit)

1. Connect individual input wiring (N, $\overline{N}$) or (D, $\overline{D}$) for each channel to numbered terminals on the 0-15 row (A) as indicated in the table below.
2. Connect the associated input common to the corresponding terminal on the 16-33 row (B) for each input as indicated in the table below.

ATTENTION: Do not connect maximum input voltage simultaneously to all inputs if the module ambient temperature is expected to exceed 40 °C.

If the ambient temperature is expected to continuously exceed 40 °C, you must limit the input voltage using an external resistor on each input. A 1kΩ resistor effectively limits a 24V sensor signal to about 15V at the input. Do not limit the input to less than 6V.

3. Connect +V DC power to terminal 34 on the 34-51 row (C).
4. Connect DC return to terminal 16 on the 16-33 row (B).
5. If daisychaining power to the next terminal base, connect a jumper from terminal 51 (+V DC) on this base unit to terminal 34 on the next base unit.

6. If continuing DC common to the next base unit, connect a jumper from terminal 33 (common) on this base unit to terminal 16 on the next base unit.

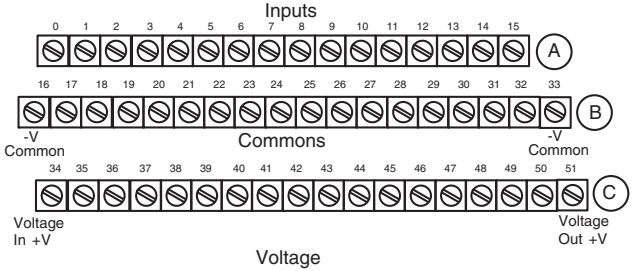

-V (Supply Common) = Terminals B16 and B33 (1794-TB3 shown)
+V (Supply +Voltage) = Terminals C34 and C51
(Use B33 and C51 for daisy-chaining to next terminal base unit.)

Connecting Wiring for the 1794-IP4 Module

(using a 1794-TBN terminal base unit)

1. Connect individual input wiring (N, $\overline{N}$) or (D, $\overline{D}$) for each channel to the even-numbered terminals on the 16-33 row (B) as indicated in the table below.
2. Connect the associated input common to the corresponding odd-numbered terminal on the 34-51 row (C) for each input as indicated in the table below.

ATTENTION: Do not connect maximum input voltage simultaneously to all inputs if the module ambient temperature is expected to exceed 40 °C.

If the ambient temperature is expected to continuously exceed 40 °C, you must limit the input voltage using an external resistor on each input. A 1kΩ resistor effectively limits a 24V sensor signal to about 15V at the input. Do not limit the input to less than 6V.

3. Connect +V DC power to terminal 34 on the 34-51 row (C).
4. Connect DC return to terminal 16 on the 16-33 row (B).
5. If daisychaining power to the next terminal base, connect a jumper from terminal 51 (+V DC) on this base unit to terminal 34 on the next base unit.

6. If continuing DC common to the next base unit, connect a jumper from terminal 33 (common) on this base unit to terminal 16 on the next base unit.

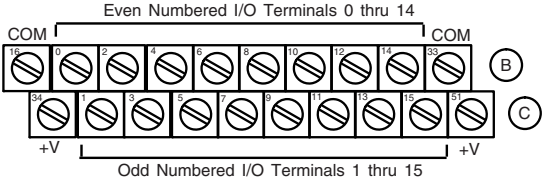

+V = Terminals C34 and C51
COM (-V) = Terminals B16 and B33

Wiring Connections for 1794-IP4

Channel	Signal Name(1)	1794-TB2, 1794-TB3, 1794-TB3S			1794-TBN(2)
		Signal	0V DC COM	12...24V DC	Signal
16-bit Period Time Measurement					
0	N	A-0	B-17	C-35	B-0
	$\overline{N}$	A-1	B-18	C-36	B-1
1	N	A-2	B-19	C-37	B-2
	$\overline{N}$	A-3	B-20	C-38	B-3
2	N	A-4	B-21	C-39	B-4
	$\overline{N}$	A-5	B-22	C-40	B-5
3	N	A-6	B-23	C-41	B-6
	$\overline{N}$	A-7	B-24	C-42	B-7
32-bit Period Time Measurement					
0	D	A-8	B-25	C-43	B-8
	$\overline{D}$	A-9	B-26	C-44	B-9
1	D	A-10	B-27	C-45	B-10
	$\overline{D}$	A-11	B-28	C-46	B-11
2	D	A-12	B-29	C-47	B-12
	$\overline{D}$	A-13	B-30	C-48	B-13

Wiring Connections for 1794-IP4

Channel	Signal Name[1]	1794-TB2, 1794-TB3, 1794-TB3S			1794-TBN[2]
		Signal	0V DC COM	12...24V DC	Signal
3	D	A-14	B-31	C-49	B-14
	$\overline{D}$	A-15	B-32	C-50	B-15
	0V DC	Terminals 16...33 (1794-TB2, 1794-TB3, 1794-TB3S)			Terminals 16 and 33
	12/24V DC	Terminals 34 and 51 (1794-TB2) Terminals 34...51 (1794-TB3, 1794-TB3S)			Terminals 34 and 51

(1) Any unused signals have to be connected to the associated common.

(2) Auxiliary terminal blocks are required when using these terminal base units.

Example of 16-bit Period Time Measurement and 16-bit Accumulating Pulse Counter Wiring (4-channels)

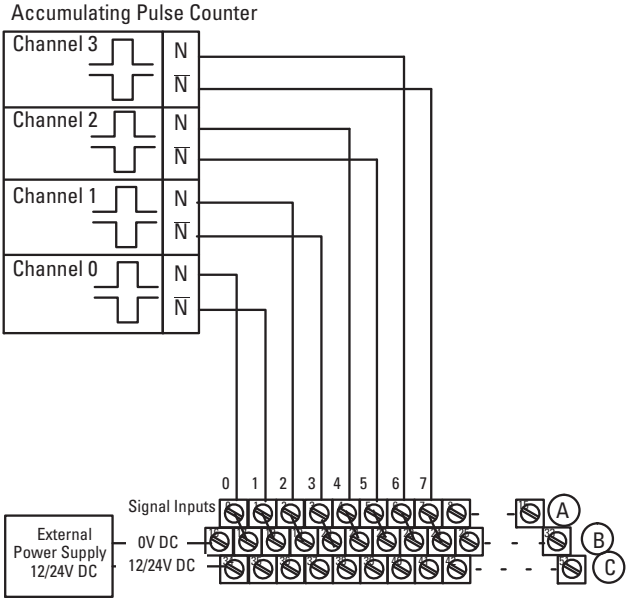

Example of 32-bit Period Time Measurement Wiring (4-channels)

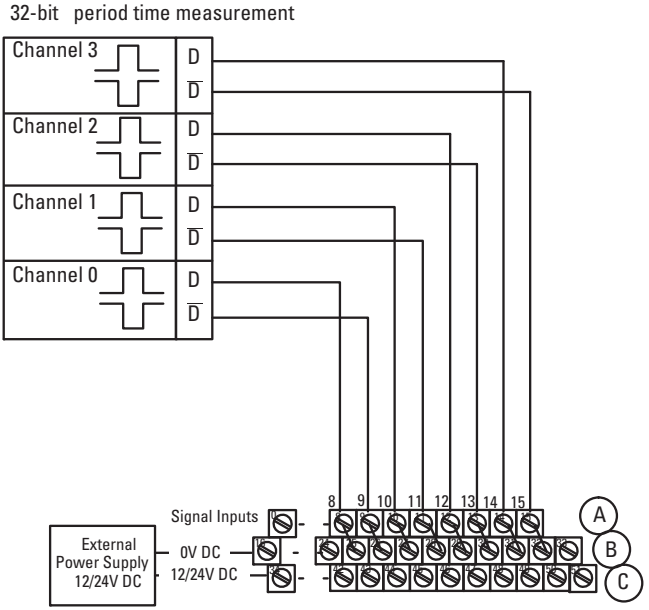

NOTE: To reduce noise, attach $\overline{N}$ to 0V DC.

Configure Your Module

Input (read) Image

Dec	15	14	13	12	11	10	9	8	7	6	5	4	3	2	1	0
Oct	**17**	**16**	**15**	**14**	**13**	**12**	**11**	**10**	**7**	**6**	**5**	**4**	**3**	**2**	**1**	**0**
0	Reserved															
1	Counter 00 – 16-bit period measurement for channel 0															
2	Counter 01 – pulse counter for channel 0 – 16-bit pulse counting															
1	32-bit period measurement for channel 0															
2	32-bit period measurement for channel 0															
3	Counter 10 – 16-bit period measurement for channel 1															
4	Counter 11 – pulse counter for channel 1 – 16-bit pulse counting															
3	32-bit period measurement for channel 1															
4	32-bit period measurement for channel 1															
5	Counter 20 – 16-bit period measurement for channel 2															
6	Counter 21 – pulse counter for channel 2 – 16-bit pulse counting															
5	32-bit period measurement for channel 2															
6	32-bit period measurement for channel 2															
7	Counter 30 – 16-bit period measurement for channel 3															
8	Counter 31 – pulse counter for channel 3 – 16-bit pulse counting															
7	32-bit period measurement for channel 3															
8	32-bit period measurement for channel 3															
9	Readback of Control Word 2															
	Reserved								RD3	RD2	RD1	RD0	M3	M2	M1	M0
10	Revision Read - software version code															
Where	M = Measurement Ready bit – positive edge measurement ready for the respective channel RD = Reset done															

Output/Configuration Image

Dec	15	14	13	12	11	10	9	8	7	6	5	4	3	2	1	0
Oct	**17**	**16**	**15**	**14**	**13**	**12**	**11**	**10**	**7**	**6**	**5**	**4**	**3**	**2**	**1**	**0**
0	Control Word 0 – selects the measure function															
1	Control Word 1 – sets the clock frequency and period multiple															
2	Control Word 2 – sets the start of a new measurement															
3	Not used															

Description of Control Word 0

Bit	Description		
00	Pulse Counting and period time measurement selection, Channel 0 0 = pulse counting and period time measurement selected – 16-bit 1 = period time measurement selected – 32-bit		
01	Pulse Counting and period time measurement selection, Channel 1 0 = pulse counting and period time measurement selected – 16-bit 1 = period time measurement selected – 32-bit		
02	Pulse Counting and period time measurement selection, Channel 2 0 = pulse counting and period time measurement selected – 16-bit 1 = period time measurement selected – 32-bit		
03	Pulse Counting and period time measurement selection, Channel 3 0 = pulse counting and period time measurement selected – 16-bit 1 = period time measurement selected – 32-bit		
04	Channel 0 – 0 = filter disabled; 1 = filter enabled[1]		
05	Channel 1 – 0 = filter disabled; 1 = filter enabled[1]		
06	Channel 2 – 0 = filter disabled; 1 = filter enabled[1]		
07	Channel 3 – 0 = filter disabled; 1 = filter enabled[1]		
08...09	09	08	Filter sample clock frequency and period (common to all channels)
	0	0	625 kHz 1.6 µs
	0	1	312.5 kHz 3.2 µs
	1	0	104.17 kHz 9.6 µs
	1	1	7.8125 kHz 128 µs
10...15	Reserved		

(1) Use filter when the input waveform has slow rise/fall time or has high frequency noise on the input waveform.

Filter Function Description

Use the filter in either 16-bit or 32-bit mode. Enable filter to use a triangular shape waveform of frequencies as low as 1 Hz. If the filter is not enabled, the module will only function properly with input waveform of square shape.

ATTENTION: Do not enable the filter with frequencies greater than 90 kHz. A loss of counts may result.

Description of Control Word 1

Bit	Description			
00	Clock Frequency for period time measurement, Channel 0 0 = period time measurement with 10 MHz internal clock selected 1 = period time measurement with 1 MHz internal clock selected			
01...03	03	02	01	Number of periods for measurement – Channel 0
	0	0	0	1 period
	0	0	1	2 periods
	0	1	0	4 periods
	0	1	1	8 periods
	1	0	0	16 periods
	1	0	1	32 periods
	1	1	0	64 periods
	1	1	1	128 periods
04	Clock frequency for period time measurement, Channel 1 – refer to bit 00			
05...07	Selection of number of periods for measurement, Channel 1 – see bits 01...03			
08	Clock frequency for period time measurement, Channel 2 – refer to bit 00			
09...11	Selection of number of periods for measurement, Channel 2 – see bits 01...03			
12	Clock frequency for period time measurement, Channel 3 – refer to bit 00			
13...15	Selection of number of periods for measurement, Channel 3 – see bits 01...03			

Description of Control Word 2

Bit	Description
00	Start new measurement, Channel 0 – when set, start new measurement on positive edge
01	Start new measurement, Channel 1 – when set, start new measurement on positive edge
02	Start new measurement, Channel 2 – when set, start new measurement on positive edge
03	Start new measurement, Channel 3 – when set, start new measurement on positive edge
04	Reset Counter, Channel 0 – a positive edge on this bit resets counter 01
05	Reset Counter, Channel 1– a positive edge on this bit resets counter 11
06	Reset Counter, Channel 2 – a positive edge on this bit resets counter 21
07	Reset Counter, Channel 3 – a positive edge on this bit resets counter 31
08...15	Reserved for factory use

Description of Control Word 2 Readback

Bit	Description
00	Positive edge, Channel 0 – measurement ready
01	Positive edge, Channel 1 – measurement ready
02	Positive edge, Channel 2 – measurement ready
03	Positive edge, Channel 3 – measurement ready
04	Reset Counter, Channel 0 – a positive edge on this bit indicates counter 01 reset done
05	Reset Counter, Channel 1 – a positive edge on this bit indicates counter 11 reset done
06	Reset Counter, Channel 2 – a positive edge on this bit indicates counter 21 reset done
07	Reset Counter, Channel 3 – a positive edge on this bit indicates counter 31 reset done
08...15	Reserved for factory use

Specifications

Specifications – FLEX I/O 4-channel Pulse Counter Module

Attribute	Value
Number of inputs	4
Number of inputs per counter	2 groups of 2
Recommended terminal base unit	1794-TB2, 1794-TB3, 1794-TB3S, 1794-TBN, 1794-TBKD
Input pulse width	Each signal condition must be stable for at least 2 µs to be recognized
Counting frequency, max	100 kHz
On-state voltage, min	6V DC
On-state voltage, max	26.4V DC (24V DC +10%)
On-state current, min	3 mA @ 6V DC
On-state current, nom	9 mA @ 12V DC
On-state current, max	15 mA @ 24V DC
Off-state voltage, min	-26.4V DC
Off-state voltage, max	3V DC
Isolation voltage	Tested @ 500V AC for 60 s
FlexBus current	5 mA @ 5V DC
Power dissipation, max	5 W @ 26.4V DC
Thermal dissipation, max	17.1 BTU/hr @ 26.4V DC
Terminal base screw torque	Determined by installed terminal base
Dimensions, approx. (H x W x D)	46 x 94 x 53 mm (1.8 x 3.7 x 2.1 in.)
Indicators (field side)	1 green/red power/status indicator 8 yellow status indicators
External power supply voltage range	12…24V DC (+10%)
Current consumption from external power supply	150 mA @ 12V DC 75 mA @ 24V DC
North American temperature code	T4
Keyswitch position	1
Enclosure type rating	None (open-style)
Wire size	Belden 8761, 304.8 m (1000 ft.)
Wiring category[1]	2 - on signal ports

(1) Use this conductor category information for planning conductor routing as described in Industrial Automation Wiring and Grounding Guidelines, publication 1770-4.1.

Environmental Specifications

Attribute	Value
Operating temperature	IEC 60068-2-1 (Test Ad, Operating Cold), IEC 60068-2-2 (Test Bd, Operating Dry Heat), IEC 60068-2-14 (Test Nb, Operating Thermal Shock): 0…55 °C (32…131 °F)
Storage temperature	IEC 60068-2-1 (Test Ab, Unpackaged Non-operating Cold), IEC 60068-2-2 (Test Bb, Unpackaged Non-operating Dry Heat), IEC 60068-2-14 (Test Na, Unpackaged Non-operating Thermal Shock): -40…85 °C (-40…185 °F)
Relative humidity	IEC 60068-2-30 (Test Db, Unpackaged Damp Heat): 5…95% non-condensing
Vibration	IEC60068-2-6 (Test Fc, Operating): 5 g @ 10...500 Hz
Shock, operating	IEC60068-2-27 (Test Ea, Unpackaged shock): 30 g
Shock, nonoperating	IEC60068-2-27 (Test Ea, Unpackaged shock): 50 g
Emissions	CISPR 11: Group 1, Class A (with appropriate enclosure)
ESD immunity	IEC 61000-4-2: 6 kV contact discharges 8 kV air discharges
Radiated RF immunity	IEC 61000-4-3: 10V/m with 1 kHz sine-wave 80% AM from 30...1000 MHz
EFT/B immunity	IEC 61000-4-4: ±2 kV @ 5 kHz on signal ports
Surge transient immunity	IEC 61000-4-5: ±1 kV line-earth(CM) on shielded ports
Conducted RF immunity	IEC 61000-4-6: 10V rms with 1 kHz sine-wave 80% AM from 150 kHz…80 MHz

Certifications

Certifications (when product is marked)[1]	Value
c-UL-us	UL Listed Industrial Control Equipment, certified for US and Canada. See UL File E65584. UL Listed for Class I, Division 2 Group A,B,C,D Hazardous Locations, certified for U.S. and Canada. See UL File E193170.
CE	European Union 2004/108/EC EMC Directive, compliant with: EN 61326-1; Meas./Control/Lab., Industrial Requirements EN 61000-6-2; Industrial Immunity EN 61000-6-4; Industrial Emissions EN 61131-2; Programmable Controllers (Clause 8, Zone A & B)
KC	Korean Registration of Broadcasting and Communications Equipment, compliant with: Article 58-2 of Radio Waves Act, Clause 3
EAC	Russian Customs Union TR CU 020/2011 EMC Technical Regulation
RCM	Australian Radiocommunications Act, compliant with: AS/NZS CISPR 11; Industrial Emissions

(1) See the Product Certification link at www.ab.com for Declarations of Conformity, Certificates, and other certification details.

Notes:

Rockwell Automation Support

Rockwell Automation provides technical information on the Web to assist you in using its products. At http://www.rockwellautomation.com/support/, you can find technical manuals, a knowledge base of FAQs, technical and application notes, sample code and links to software service packs, and a MySupport feature that you can customize to make the best use of these tools.

For an additional level of technical phone support for installation, configuration and troubleshooting, we offer TechConnect support programs. For more information, contact your local distributor or Rockwell Automation representative, or visit http://www.rockwellautomation.com/support/.

Installation Assistance

If you experience a problem within the first 24 hours of installation, please review the information that's contained in this manual. You can also contact a special Customer Support number for initial help in getting your product up and running.

United States or Canada	1.440.646.3434
Outside United States or Canada	Use the Worldwide Locator at http://www.rockwellautomation.com/support/americas/phone_en.html, or contact your local Rockwell Automation representative.

New Product Satisfaction Return

Rockwell Automation tests all of its products to ensure that they are fully operational when shipped from the manufacturing facility. However, if your product is not functioning and needs to be returned, follow these procedures.

United States	Contact your distributor. You must provide a Customer Support case number (call the phone number above to obtain one) to your distributor to complete the return process.
Outside United States	Please contact your local Rockwell Automation representative for the return procedure.

Documentation Feedback

Your comments will help us serve your documentation needs better. If you have any suggestions on how to improve this document, complete this form, publication RA-DU002, available at http://www.rockwellautomation.com/literature/.

Allen-Bradley, Rockwell Automation, FLEX I/O, and TechConnect are trademarks of Rockwell Automation, Inc.

Trademarks not belonging to Rockwell Automation are property of their respective companies.

Rockwell Otomasyon Ticaret A.Ş., Kar Plaza İş Merkezi E Blok Kat:6 34752 İçerenköy, İstanbul, Tel: +90 (216) 5698400

www.rockwellautomation.com

Power, Control and Information Solutions Headquarters

Americas: Rockwell Automation, 1201 South Second Street, Milwaukee, WI 53204-2496 USA, Tel: (1) 414.382.2000, Fax: (1) 414.382.4444
Europe/Middle East/Africa: Rockwell Automation, Vorstlaan/Boulevard du Souverain 36, 1170 Brussels, Belgium, Tel: (32) 2 663 0600, Fax: (32) 2 663 0640
Asia Pacific: Rockwell Automation, Level 14, Core F, Cyberport 3, 100 Cyberport Road, Hong Kong, Tel: (852) 2887 4788, Fax: (852) 2508 1846

Publication 1794-IN064E-EN-P - August 2015

Supersedes Publication 1794-IN064D-EN-P - March 2005

Copyright © 2015 Rockwell Automation, Inc. All rights reserved.