Allen-Bradley

InView Marquee Message Display

2706-P22R, 2706-P42, 2706-P43, 2706-P44, 2706-P72, 2706-P74, 2706-P92, 2706-P94

User Manual

Rockwell Automation

Important User Information

Solid state equipment has operational characteristics differing from those of electromechanical equipment. Safety Guidelines for the Application, Installation and Maintenance of Solid State Controls (publication SGI-1.1 available from your local Rockwell Automation sales office or online at http://literature.rockwellautomation.com) describes some important differences between solid state equipment and hard-wired electromechanical devices. Because of this difference, and also because of the wide variety of uses for solid state equipment, all persons responsible for applying this equipment must satisfy themselves that each intended application of this equipment is acceptable.

In no event will Rockwell Automation, Inc. be responsible or liable for indirect or consequential damages resulting from the use or application of this equipment.

The examples and diagrams in this manual are included solely for illustrative purposes. Because of the many variables and requirements associated with any particular installation, Rockwell Automation, Inc. cannot assume responsibility or liability for actual use based on the examples and diagrams.

No patent liability is assumed by Rockwell Automation, Inc. with respect to use of information, circuits, equipment, or software described in this manual.

Reproduction of the contents of this manual, in whole or in part, without written permission of Rockwell Automation, Inc., is prohibited.

Throughout this manual, when necessary, we use notes to make you aware of safety considerations.

WARNING	Identifies information about practices or circumstances that can cause an explosion in a hazardous environment, which may lead to personal injury or death, property damage, or economic loss.
IMPORTANT	Identifies information that is critical for successful application and understanding of the product.
ATTENTION	Identifies information about practices or circumstances that can lead to personal injury or death, property damage, or economic loss. Attentions help you identify a hazard, avoid a hazard, and recognize the consequence
SHOCK HAZARD	Labels may be located on or inside the equipment, for example, a drive or motor, to alert people that dangerous voltage may be present.
BURN HAZARD	Labels may be located on or inside the equipment, for example, a drive or motor, to alert people that surfaces may be dangerous temperatures.

This document describes the InView Marquee Message Display.

Revision bars in the margin identify updated information. Changes for this version of the document include:

Change	Page
Updated information on how to change the serial address	1-2
Added information about how to use the 2706-PCABLE1 to download a message application	1-27
Added information about the communication module when you set the IP address.	2-11

Install InView Marquee Message Display

Chapter 1

Introduction 1-1
Wire and Safety Guidelines 1-1
Change the Serial Address 1-2
Checkout Procedure 1-2
Electrical Connections for 2706-P42, 2706-P43 and 2706-P44 Displays 1-2
Mount the 2706-P42, 2706-P43 and 2706-P44 Displays 1-6
Wall Mount 1-7
Ceiling Mount 1-9
Stack Mount 1-10
Back-to-back Mount. 1-11
Mount the 2706-P72 and 2706-P74 series NEMA 4 and 4x models 1-13
Electrical Connections for 2706-P72 and 2706-P74 Signs . . . 1-14
Mount the 2706-P92C and 2706-P94C Sign 1-17
Back-to-back Mount. 1-19
Electrical Connections for 2706-P92C and 2706-P94C Signs . 1-19
Mount the 2706-P22R Display 1-23
Panel Cutout Dimensions for 2706-P22R Display 1-23
Dimensions for 2706-P22R Display 1-24
Electrical Connections for 2706-P22R Display 1-24
Communication Connections for 2706-P22R Display 1-25
DIP Switch Settings for 2706-P22R Display 1-26
Download a Message Application 1-27
RS-232 to RS-485 Networking. 1-27
RS-485 Echo 1-28
Global Addressing 1-29
Ground and Terminate the RS-485 Network 1-29

InView System Connectivity

Chapter 2

Serial ASCII Communications. 2-1
Features 2-1
2706-P42, 2706-P43, 2706-P44, 2706-P72, and 2706-P74 Displays 2-1
2706-P22 Display 2-2
Dip Switch Information for the 2706-P9x 2-4
Switch 1 2-4
Switch 2 2-5
Additional Information for 2706-P9x Displays 2-6
Power-up Messages. 2-10
2706-P42, 2706-P43, 2706-P44, 2706-P72, 2706-P74, 2706-P92, and 2706-P94 Displays 2-10
2706-P22: Display 2-10
Display Setup 2-11
Set the IP Address. 2-11

Gateway Address and Subnet Mask Setup 2-15
Create the Message File 2-16
Attach a Note to a Message 2-17
Text Color 2-17
Date, Time and Variables 2-17
Category 2-18
Message Priorities 2-18
Pause 2-19
Message Header. 2-19
Preview Messages 2-19
Set the Display Address 2-19
Download Messages 2-20
Clear Memory/Message Queue 2-22

Chapter 3

Serial ASCII Communications

Use a PLC5 out Channel Zero 3-1
Use an SLC 5/03, 5/04, or 5/05 out Channel Zero 3-2
Use a MicroLogix out Channel Zero or One 3-3
Use ControlLogix Processor out Channel Zero 3-4
Use the CompactLogix Processor out Channel Zero or One 3-5
Use FlexLogix Processor out Channel Zero. 3-6

Chapter 4

InView Protocol

Introduction 4-1
Trigger Messages and Update Variables 4-1
The CTRL-T Function Frame. 4-1
The CTRL-V Function Frame - Numeric Variables 4-3
The CTRL-V Function Frame - Alphanumeric Variables . 4-4
Examples of the Control-T Function. 4-5
Trigger a Message on all Displays using Priority Messaging 4-5
Trigger a Message on a Specific Display using Priority Messaging 4-6
Add a Message on all Displays 4-7
Adding a Message on a Specific Display 4-7
Remove all Messages on all Displays 4-7
Remove all Messages on a Specific Display. 4-8
Remove a Message on a Specific Display 4-9
Examples of the Control-V Function. 4-9
Update a Variable on all Displays. 4-9
Update Variable on a Specific Display 4-10
Modbus ASCII Protocol to Download and Preview Messages 4-10
How InView Sign Communication Protocol is used with Modbus ASCII Protocol 4-11

Mode of Transmission 4-12
InView Display Memory Map 4-12
Methods of Transmission 4-13
Message Format 4-14
Longitudinal Redundancy Check (LRC) Error Detection and Calculation 4-16
Examples of Modbus ASCII Functions 4-17
Heartbeat Function 4-18
Clear the Display Memory 4-20
Clear the Message Queue using Modbus ASCII in Broadcast Mode (Recommended) 4-20
Clear the Message Queue using Modbus ASCII in Guaranteed Mode 4-21
Set Time in Broadcast Mode with AM/PM Format 4-21
Set Time in Broadcast Mode with 24 Hour Format. 4-22
Set Day and Date in Broadcast Mode 4-23
Preview a Message. 4-25
Download Messages 4-27
Add/Remove a Message using a Modbus ASCII 10 Frame Query (Recommended) 4-33
Add/Remove a Message using Modbus ASCII 10 Frame Transmission 4-33
Priority Messaging using a Modbus ASCII Query (Recommended) 4-34
Priority Messaging using a Modbus ASCII Transmission . 4-35
Update a Variable using a Modbus ASCII 06 Frame in Broadcast Mode (Recommended) 4-35
Update a Variable using a Modbus ASCII 06 Frame in Guaranteed Mode 4-36
Update Variables using a Modbus ASCII 10 frame in Broadcast mode (Recommended) 4-36
Update Variables using a Modbus ASCII 10 frame in Guaranteed mode 4-37
Read the Message Queue using a Modbus ASCII 03 frame 4-38
Read Variables in a Display using a Modbus ASCII 03 frame 4-39
Change the InView Display Address 4-40
InView Display Communication Protocol Functions and Descriptions 4-41
InView Message Format used within Modbus ASCII Protocol 4-41
Special Function Command 4-45
Text Position Placement 4-51
ASCII Characters 4-52
Reference Material. 4-52

Chapter 5

InView Control and InView Control API

Introduction 5-1
Quick Overview 5-1
Reference 5-2
Properties 5-3
Methods 5-7

Appendix A

Specifications

2706-P43, 2706-P42, 2706-P44, 2706-P72 Specifications A-1
2706-P92, 2706-P94 Specifications A-2
2706-P22R Specifications A-3

Appendix B

Catalog Number Explanation

Appendix C

Temperature Protection in NEMA-Rated Enclosures

Index

Install InView Marquee Message Display

Introduction

These instructions show how to change the serial address and how to mount InView series signs with NEMA Types 4, 4X, and 12 enclosures. These signs are intended for indoor use only. Type 4 enclosures are intended to provide a degree of protection against windblown dust and rain, splashing water, and hose-directed water. Type 4X enclosures are intended to provide a degree of protection against corrosion, windblown dust and rain, splashing water, and hose-directed water. Type 12 enclosures are in a sealed case that is, dust free, gasketing, and spray down resistant.

Wire and Safety Guidelines

Install the InView display conforming to NFPA 70E, Electrical Safety Requirements for Employee Workplaces. In addition to the NFPA general guidelines, refer to the following.

- Careful cable routing helps minimize electrical noise. Route incoming power to the module by a separate path from the communication cables.

TIP Do not run communications wiring and power wiring in the same conduit!

- Where communication and wire paths must cross, make their intersection perpendicular.
- Grounding helps limit the effects of noise due to electromagnetic interference (EMI). To avoid problems caused by EMI, properly ground all equipment and use shielded cables.

WARNING

EXPLOSION HAZARD

Do not connect or disconnect equipment unless power has been switched off and area is known to be non-hazardous.

IMPORTANT Power wiring must be in accordance with Class I, Class II and Class III Division 2 wiring methods (Articles 501-4(b), 502-4(b) and 503-3(b) of the National Electrical Code, NFPA70) and in accordance with the local authority having jurisdiction.

Change the Serial Address

A serial address for an InView sign is a number from 1 to 254 in hexadecimal (01 to FE). All signs leave the factory with a default address of 1 or 01.

This serial address is resident in the InView display and is used for RS485 networking. If one of the factory network communications modules are used (2706-P*xxxx*), this serial address is typically left at its factory default and the network node or IP address is set in the factory network communication module.

Checkout Procedure

After you install a sign according to the Electrical and Mounting Instructions, make sure the sign is installed properly by applying power to it. The following information should be displayed on the sign.

- Firmware part number and version letter (xxxx).
- Amount of RAM in the sign, (256K).
- Serial address of the sign (a number from 01 to FE or from 1 to 254).

Electrical Connections for 2706-P42, 2706-P43 and 2706-P44 Displays

WARNING Hazardous voltage. Contact with high voltage may cause death or serious injury. Always disconnect power to sign prior to servicing.

To connect the 2706-P42, 2706-P43, and 2706-P44 displays:

1. Remove the power supply cover by unscrewing its 6 screws.

   Save the screws for a later step.

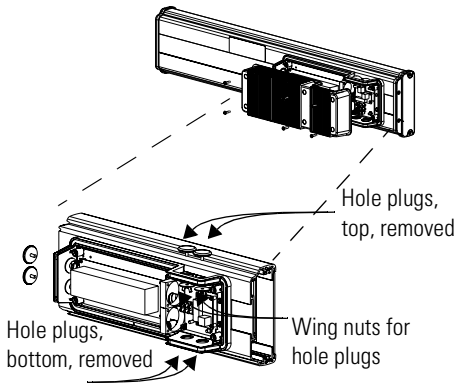

TIP It is recommended that you install power and serial wires at the bottom of the power supply enclosure to reduce noise from power wires crossing serial wires.

You can install the power or serial wires at the top of the enclosure if necessary.

2. Remove the left or right conduit hole plug from the top of the enclosure by removing its wing nut inside the enclosure.

   Save the hole plug for a later step.

3. Insert the power wires through the left conduit hole on either the top or the bottom of the sign.

TIP Use watertight conduit connectors only. Flexible conduit should be used.

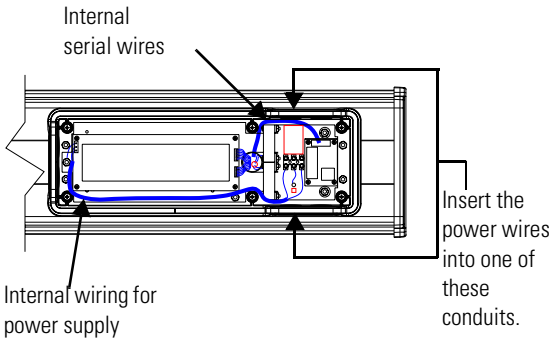

4. Strip the wires back 6.35 mm (1/4 in.). Connect the incoming electrical wires.

TIP Be sure to place the wires so they are not caught by screws when replacing the power supply cover, and also so they do not interfere with fan operation.

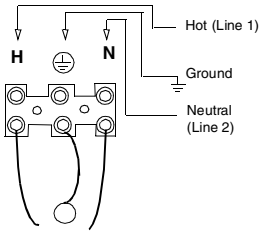

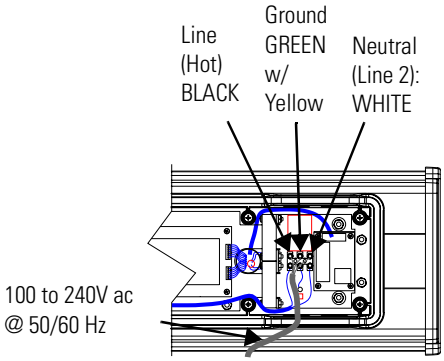

5. Insert the serial wires through the right conduit hole on either the top or the bottom of the sign.

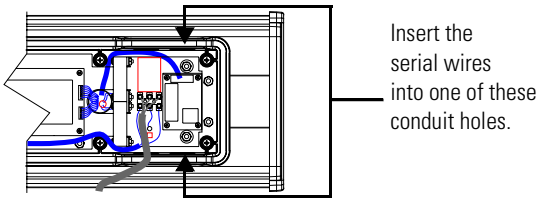

TIP TB1 can be used for incoming serial connection for RS-232 or RS-485.

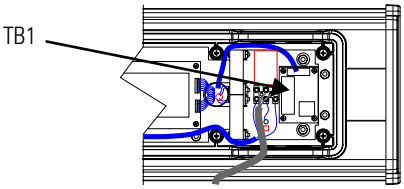

TB1 - Full

Pin	Pin Name	Pin	Pin Name
1.	GND	5.	RS-485(+)
2.	+5V	6.	RS-485(-)
3.	RS-232 TX	7.	NC
4.	RS-232 RX	8.	SHIELD

6. Connect the incoming serial wires.

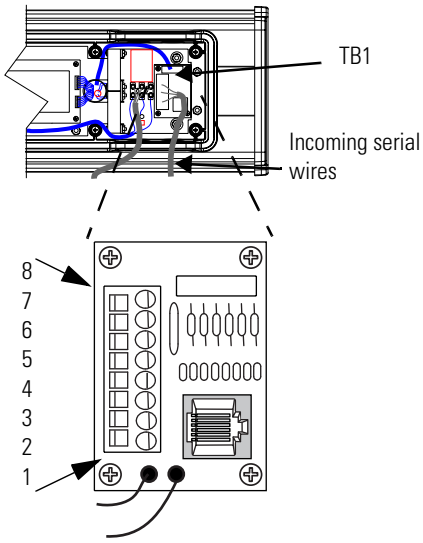

TB1 can be used for incoming RS-232 or RS-485 serial connection. They cannot be connected at the same time. RS-485 is recommended to reduce undesirable electrical interference.

TIP Be sure to place the wires so they are not caught by screws when replacing the power supply cover, and also so they do not interfere with fan operation.

TB1 - RS-232

Pin	Pin Name	Pin	Pin Name
1.	GND	5.	NC
2.	NC	6.	NC
3.	RS-232 TX	7.	NC
4.	RS-232 RX	8.	NC

TB1 - RS-485

Pin	Pin Name	Pin	Pin Name
1.	NC	5.	RS-485(+)
2.	NC	6.	RS-485(-)
3.	NC	7.	NC
4.	NC	8.	SHIELD

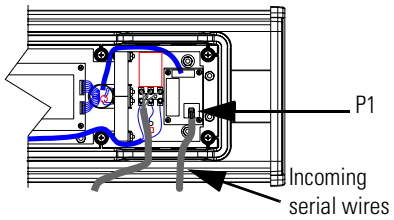

7. P1 can be used for incoming RS-232 only, although it is optional and not recommended.

   P1 is intended for RS-232 application downloads and RS-485 terminating resistor connection.

   See publication 2706-IN007 for more information on RS-485 termination.

TIP Be sure to place the wires so they are not caught by screws when replacing the power supply cover, and also so they do not interfere with fan operation.

8. To maintain NEMA compliance and to prevent EMI emissions, install hole plugs in any open conduit holes in the power supply enclosure.

If needed, there is an extra hole plug supplied in addition to any hole plugs removed in Step 2 on page 3.

9. Replace the power supply cover using the 6 screws from when the cover was removed.
10. Torque the screws to 2.7 Nm (24 lb-in).
11. Connect the power cable to a power source.

Mount the 2706-P42, 2706-P43 and 2706-P44 Displays

TIP

Only qualified personnel should install the InView signs.

InView signs are for indoor use only and should not be continuously exposed to direct sunlight.

Mounting hardware that is used to hang or suspend signs must be capable of supporting at least 4 times the total weight of any/all signs mounted together.

For integrity of the case, do not drill holes in or modify the case.

Disconnect power before you mount a sign.

WARNING

Hazardous voltage. Contact with high voltage may cause death or serious injury. Always disconnect power to sign prior to servicing.

Wall Mount

TIP Remove only one end cap at a time.

To mount the display to a wall:

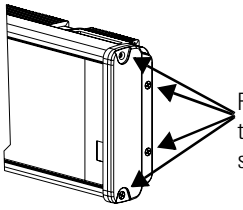

1. Remove the 4 screws and the end cap from one end of the sign.
2. Slide one of the wall mounting brackets onto the back of the sign until it is approximately 13 mm (0.5 in.) away from the end of the sign.

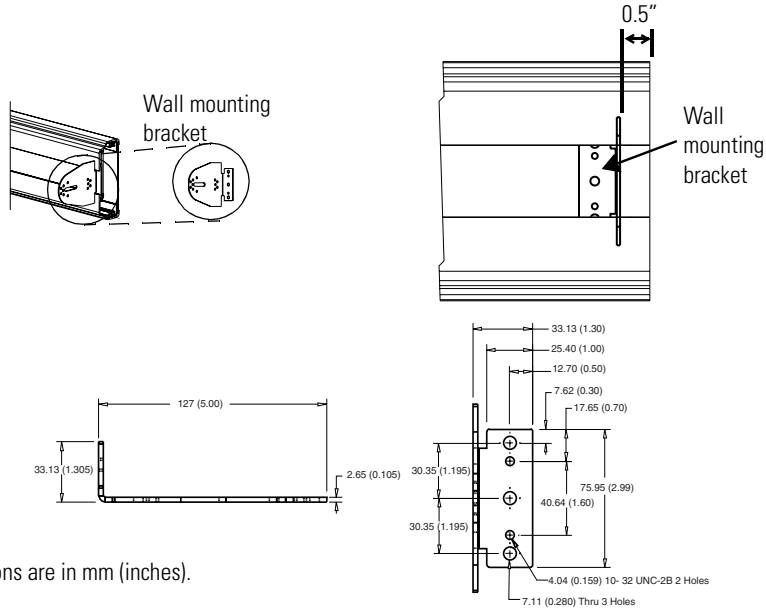

Dimensions are in mm (inches).

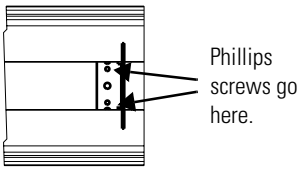

3. Use two 10-32 x 1/4 Phillips screws (supplied) to secure the wall mounting bracket to the back of the sign.
4. Torque the screws to 2.7 Nm (24 lb-in).
5. Replace the end cap using the 4 screws removed in Step 1 above.
6. Torque the screws to 2.7 Nm (24 lb-in).
7. Repeat Steps 1 to 6 for the other end of the sign.

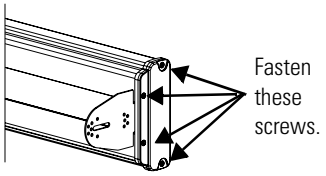

Approximate distances between the bracket holes, center-to-center, are shown below.

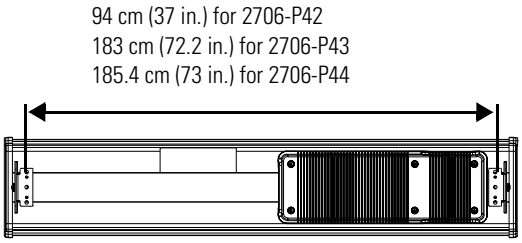

8. Attach the two remaining wall mounting brackets to a wall so that they align with the brackets on the sign.

TIP Do not install the sign directly to drywall or plaster-board. The sign must be fastened to a wall capable of supporting at least four times the weight of the sign.

9. Connect the mounting brackets on each end of the sign together using a 5/16 Phillips screw and a 5/16 washer through the mounting holes, as shown below, securing with a 5/16 nut.

   Do not tighten the nut at this time.

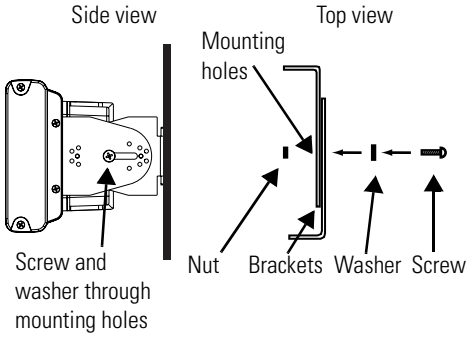

10. Match the alignment holes of the brackets on the sign with the alignment holes of the brackets on the wall so that the sign is at the desired viewing angle.

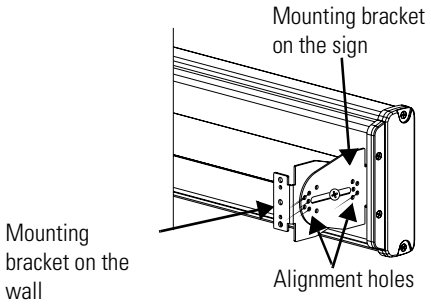

TIP The second mounting bracket is shown here for illustration only. It is actually mounted to the wall.

11. Fasten the mounting brackets together using two 10-32 x 3/4 Phillips screws, two 10-32 washers, and two 10-32 lock nuts through selected alignment holes on each end of the sign.

12. Torque to 2.7 Nm (24 lb-in).

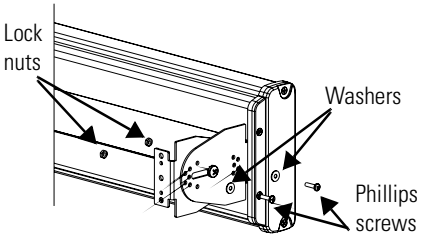

13. Torque the 5/16 nuts in the mounting holes (See Step 9) to 2.7 Nm (24 lb-in).

Ceiling Mount

To mount the display to the ceiling:

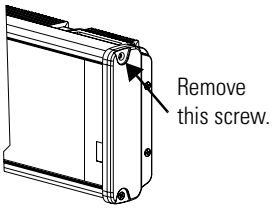

1. Remove one screw from the top of the end cap.
2. Line up a ceiling bracket with the top hole on the sign's end cap so the bracket fits in the indentation.

   There are left and right ceiling brackets. Use the one that fits with the screw hole's countersunk side facing out.

3. Secure the ceiling bracket with the screw removed in Step 1 and torque the screw to 2.7 Nm (24 in-lb).

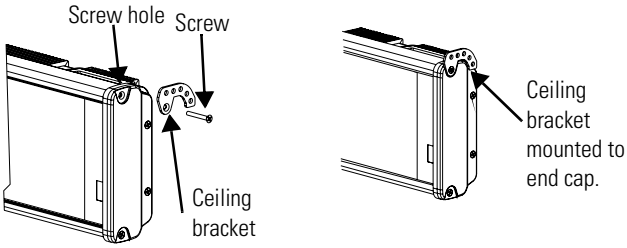

4. Repeat steps 1 through 3 for the other end of the sign.
5. Use chains (not supplied) to hang the sign from a ceiling.

TIP Use chains capable of supporting 4 times the total weight of the sign(s).

TIP The hole you select in the ceiling bracket for the chain determines the angle at which the sign hangs.

Stack Mount

TIP Up to 4 signs can be hung together vertically ('stacked'). Mounting system for stack mounting must support a minimum of four times the total weight of all signs being stacked.

WARNING Possible crush hazard. Do not stack more than 4 signs. Otherwise signs may fall causing serious injury or death.

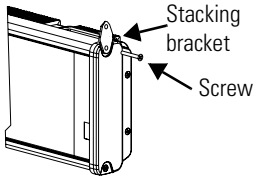

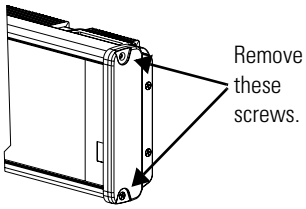

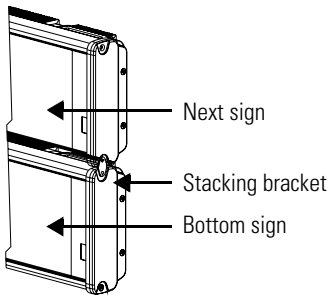

To stack the signs:

1. Remove the top screw from each end cap of the bottom sign
2. Use the screw removed in Step 1 to fasten a stacking bracket to each end cap, countersunk side out, and torque to 2.7 Nm (24 lb-in).
3. Remove the top and bottom screws from each end of the remaining signs.
4. For each end of the signs, secure the stacking bracket from the bottom sign to the next sign using one of the screws removed in Step 3 and torque to 2.7 Nm (24 lb-in).
5. Secure a ceiling bracket to the top of each end cap on the top sign.

   See Step 2 of the Ceiling Mount instructions on page 1-9.

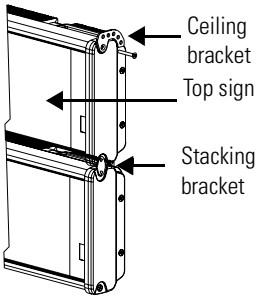

6. Use a chain (not supplied) to hang the signs from the ceiling.

Follow the notes in Step 4 of the Ceiling Mount instructions on page 1-9.

Back-to-back Mount

TIP Remove only one end cap at a time for each sign.

To mount the signs back-to-back:

1. Attach a mounting bracket on each end of the signs and replace the end caps.

   Follow Steps 1 to 5 of the Wall Mount instructions.

2. However, replace only the bottom three screws for each end cap and torque the screws to 2.7 Nm (24 lb-in).

   Do this for each end of both signs.

TIP Do NOT fasten the top screws to the end caps. The top screws are used to fasten the ceiling mounting brackets to the end caps in the next step.

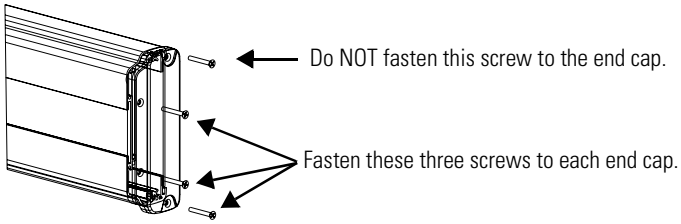

3. Attach ceiling mounting brackets to all the end caps and torque the screws to 2.7 Nm (24 lb-in).

   See Step 2 of the Ceiling Mount instructions.

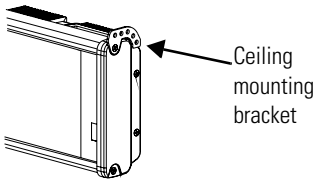

4. Match the signs together back-to-back and connect them together.

   Follow Steps 7 through 10 of the Wall Mount instructions on page 1-8.

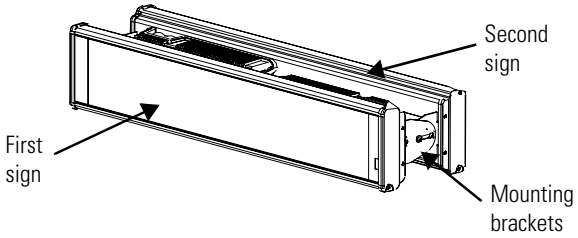

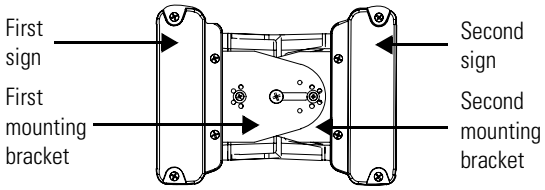

5. Use chains (not supplied) to hang the signs from the ceiling.

TIP Use chains capable of supporting 4 times the total weight of the signs.

Mount the 2706-P72 and 2706-P74 series NEMA 4 and 4x models

To mount the sign:

1. Attach the two sign brackets to a wall, ceiling, or other surface.

   Be sure to place the brackets so the bracket flanges face appropriately as shown below. Mount the brackets the following distance apart (measured from the center of the mounting holes in each bracket):

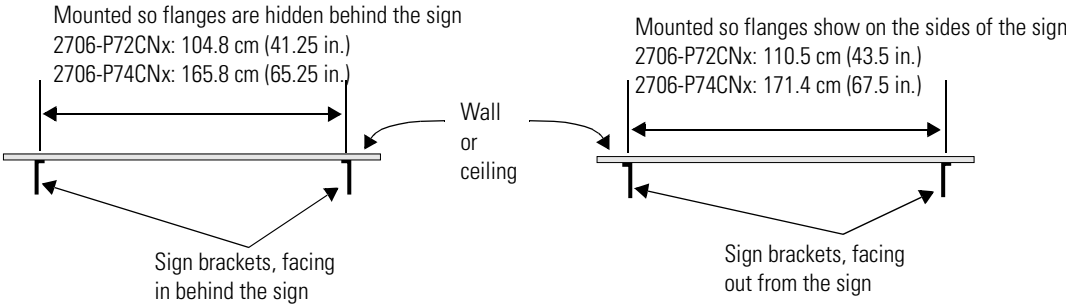

IMPORTANT Do not install the sign directly to drywall or plasterboard. The sign must be fastened to a surface capable of supporting at least four times the weight of the sign.

2. Mount the sign on the sign brackets using the two large hex bolts supplied.

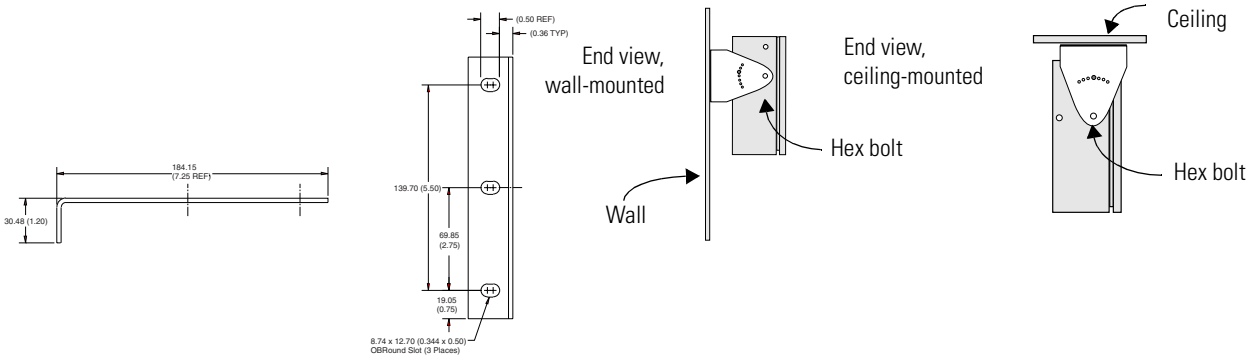

3. Tilt the sign to select a viewing angle.

4. To hold the sign in place, insert a Phillips screw (supplied) through one of the small holes on each bracket into the screw hole in the sign case.

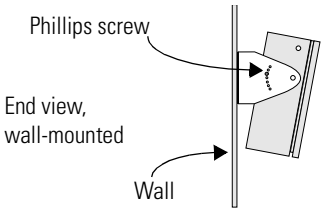

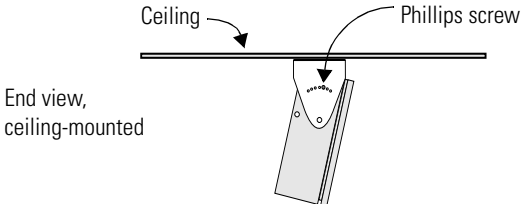

TIP Keep a minimum 2.54 cm (1.0 in.) clearance on all sides of the sign for adequate ventilation.

Electrical Connections for 2706-P72 and 2706-P74 Signs

WARNING Hazardous voltage. Contact with high voltage may cause death or serious injury. Always disconnect power to sign prior to servicing.

To connect the sign:

1. Open the front of the sign case by turning the quarter-turn latches to the left with a large screwdriver.

   (On the 2706-P72CNx, there are 3 quarter-turn latches; on the 2706-P74CNx there are 4.) Carefully let the front of the case drop forward.

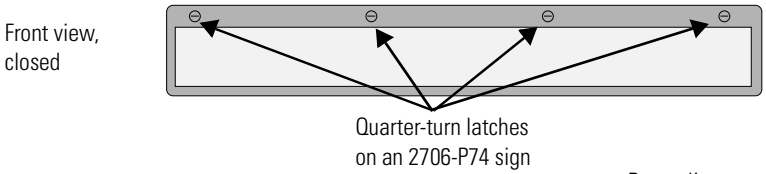

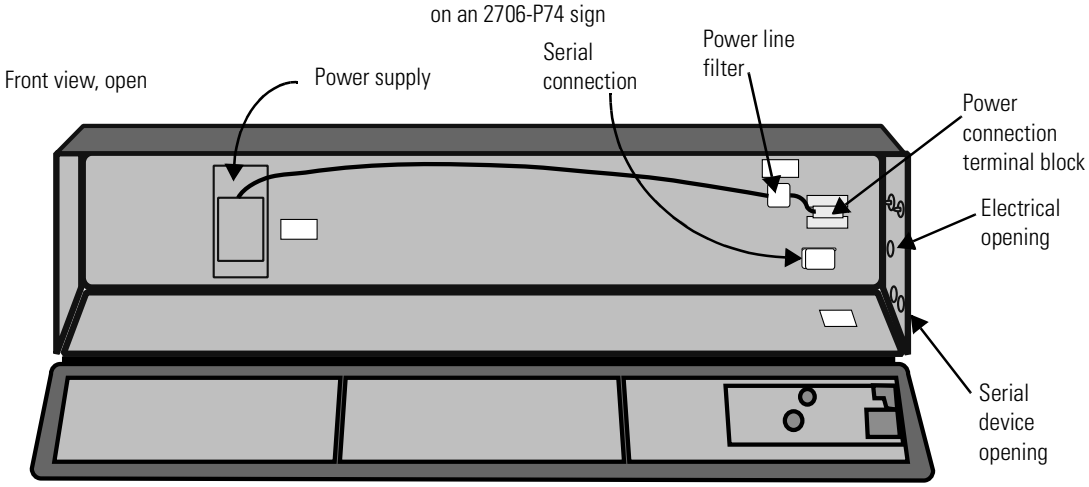

2. Feed electrical cable through 2.54 cm (1 in.) water-tight conduit, the outside end of the connector (supplied), the electrical opening in the sign case, and then through the inside end of the connector.

3. Screw the inside and outside ends of the connector together until water-tight.

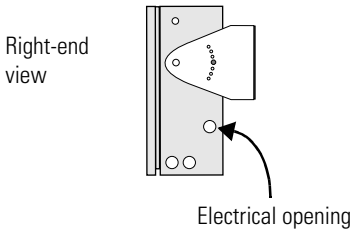

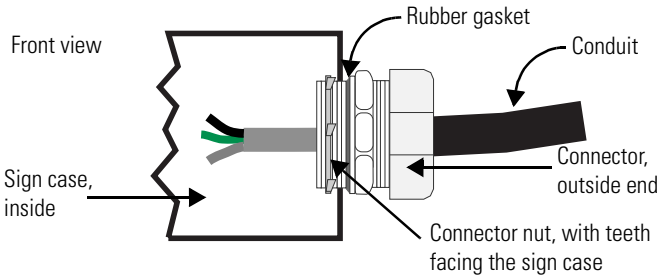

4. Strip the electrical wires back 6.35 cm (0.25 in.).

5. Connect the wires by screwing the end of each wire into the power connection.

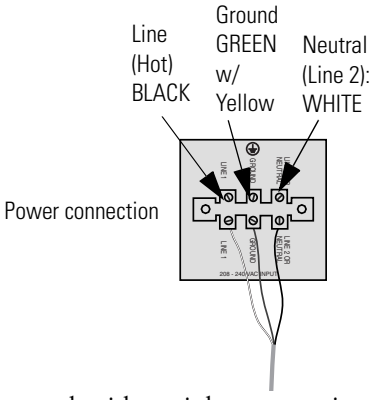

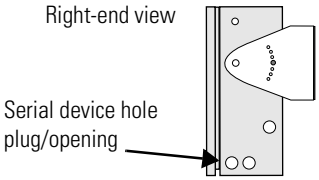

6. If the sign is to be used with serial communications, remove one or both of the hole plugs from the lowest holes on the right end of the sign case.

   Otherwise, proceed to Step 7.

TIP TB1 can be used for incoming serial connection for RS-232 or RS-485. The full pinout diagram is shown below.

TB1 Full

Pin	Pin Name	Pin	Pin Name
1.	GND	5.	RS-485(+)
2.	+5V	6.	RS-485(-)
3.	RS-232 TX	7.	NC
4.	RS-232 RX	8.	SHIELD

7. Connect the incoming serial wires per pinout.

   TB1 can be used for incoming RS-485 or RS-232 serial connection. They cannot be connected at the same time.

   RS-485 is recommended to reduce undesirable electrical interference.

TB1 RS-485

Pin	Pin Name	Pin	Pin Name
1.	NC	5.	RS-485(+)
2.	NC	6.	RS-485(-)
3.	NC	7.	NC
4.	NC	8.	SHIELD

TB1 RS-232

Pin	Pin Name	Pin	Pin Name
1.	GND	5.	NC
2.	NC	6.	NC
3.	RS-232 TX	7.	NC
4.	RS-232 RX	8.	NC

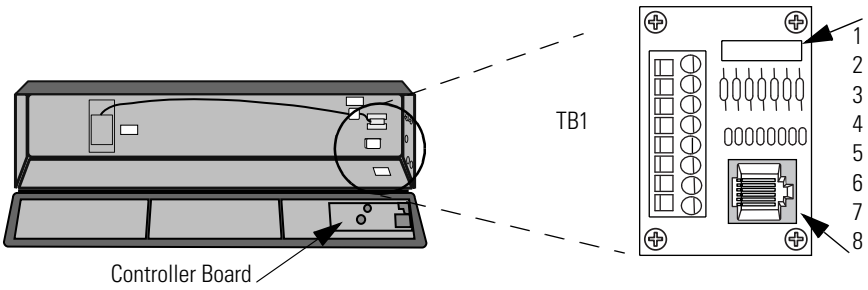

P1 can be used for incoming RS-232 only, although it is optional and not recommended.P1 is intended for RS-232 application downloads and RS-485 terminating resistor connection.

See publication 2706-IN007 for more information on RS-485 termination.

8. Carefully close the front of the sign case and turn the quarter-turn latches to the right with a large screwdriver.

Mount the 2706-P92C and 2706-P94C Sign

To mount the sign:

1. Attach the two sign brackets to a wall, ceiling, or other surface.

   Be sure to place the brackets so the bracket flanges face appropriately as shown below. Mount the brackets the following distance apart (measured from the center of the mounting holes in each bracket).

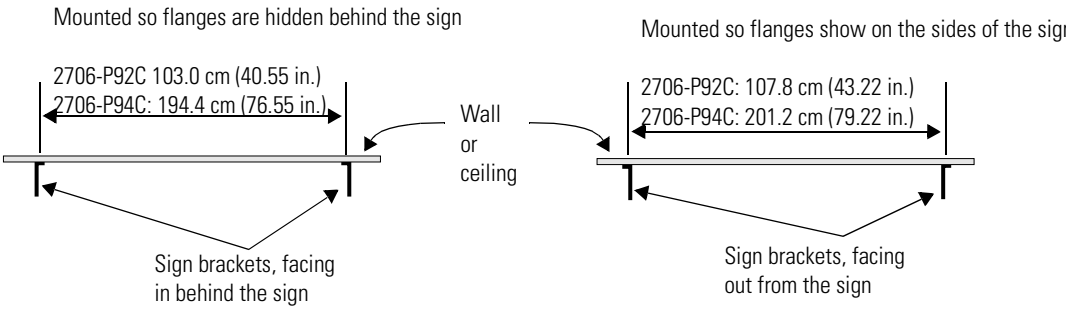

IMPORTANT Do not install the sign directly to drywall or plasterboard. The sign must be fastened to a surface capable of supporting at least four times the weight of the sign.

2. Mount the sign on the sign brackets using the hex bolts supplied.

3. Insert the bolts into the far single holes first, until the desired viewing angle is determined.

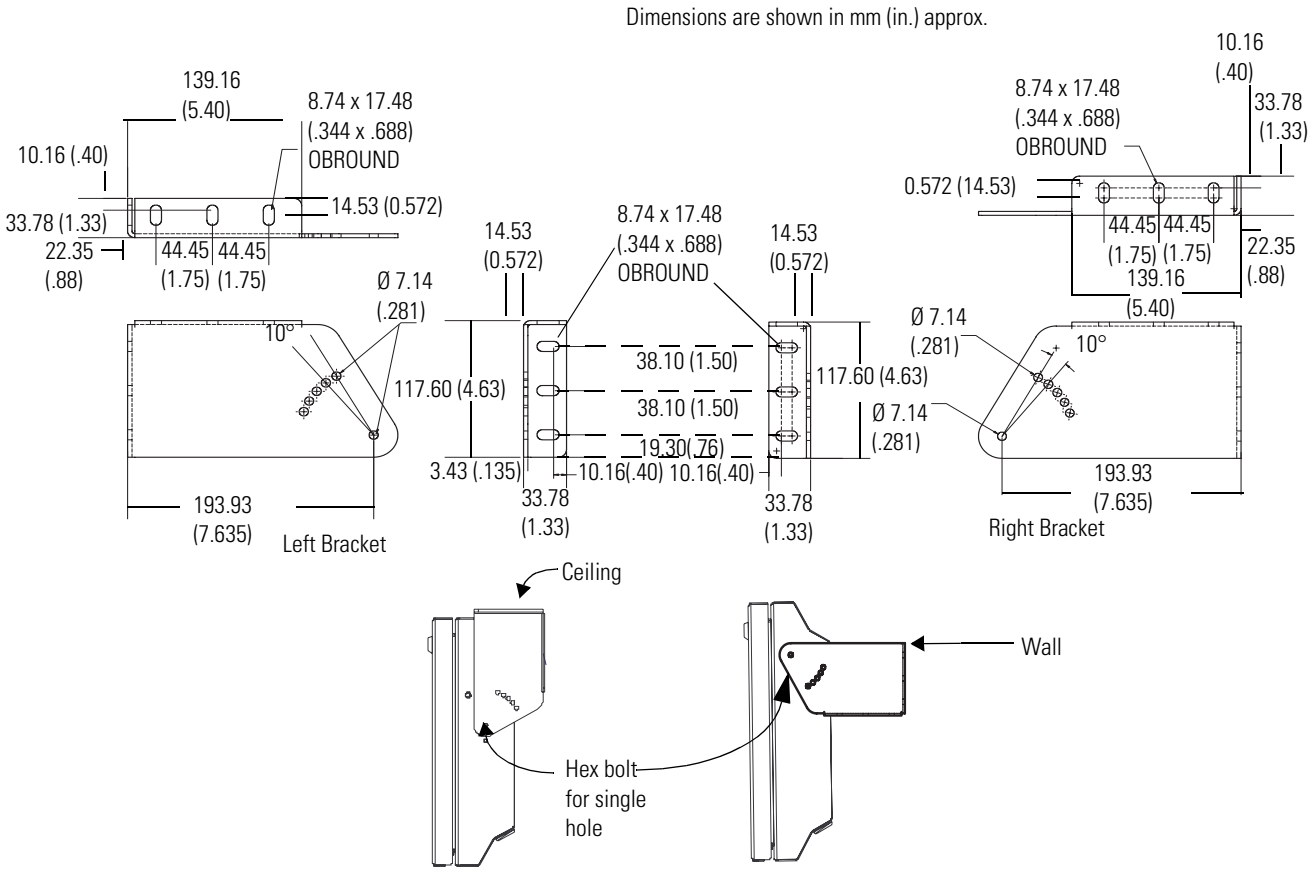

4. Tilt the sign to select a viewing angle.

5. To hold the sign in place, insert the remaining bolts into the desired viewing angle hole on each bracket.

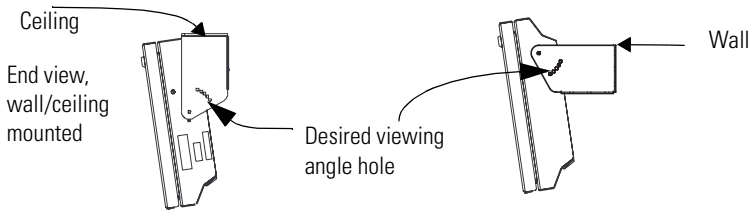

TIP Keep a minimum 2.54 cm (1.0 in.) clearance on all sides of the sign for adequate ventilation.

Back-to-back Mount

1. Attach the brackets to the sign in the ceiling mount position with the hex bolts supplied.

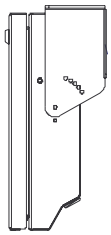

2. Match the signs together back-to-back and connect them together using a total of six 5/16” bolts and nuts (not supplied).

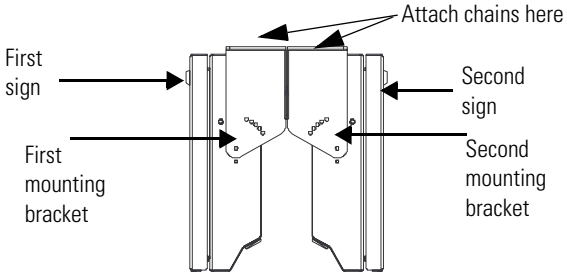

3. Attach chains (not supplied) to the top mounting holes of the bracket to hang the signs from the ceiling.

TIP Use chains capable of supporting 4 times the total weight of the signs.

Electrical Connections for 2706-P92C and 2706-P94C Signs

WARNING

HAZARDOUS VOLTAGE

- Contact with high voltage may cause death or serious injury. Always disconnect power to sign prior to servicing.
- Maintain Separation of circuits. Route the incoming power directly to the power connection terminal block.
- Do not run the power wiring over the logic board or optional Communication board.

Open the front of the sign case by turning the half-turn latches to the left with a large screwdriver. On the 2706-P92C, there are 3 half-turn latches; on the 2706-P94C there are 5. Carefully let the front of the case drop forward.

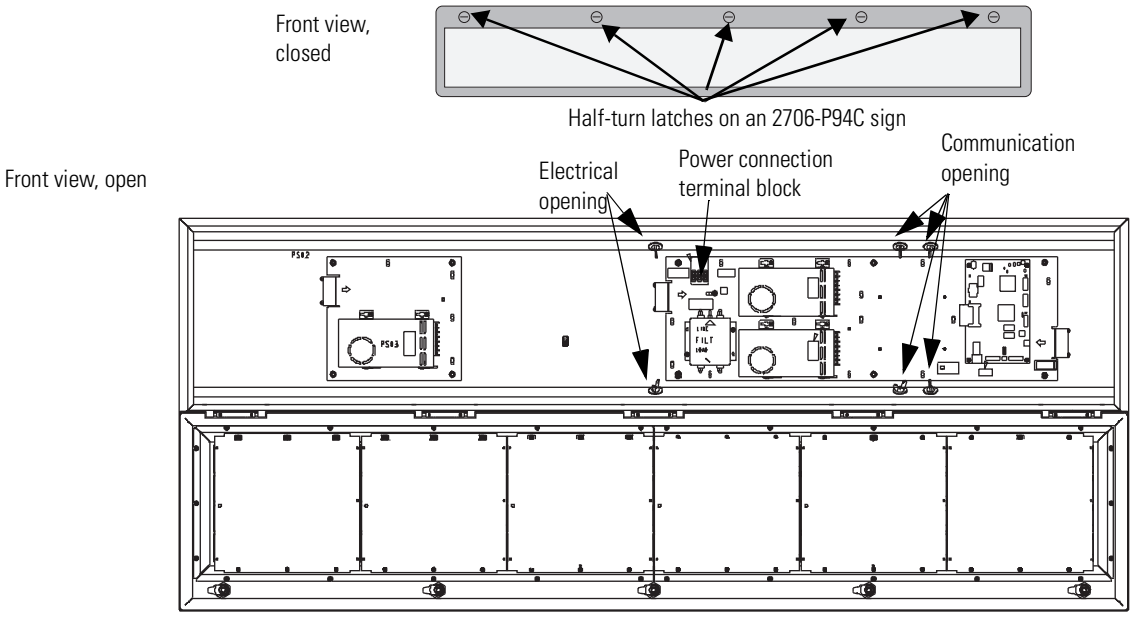

4. Feed electrical cable through 12.7 mm (0.5 in.) water-tight conduit, the outside end of the connector (supplied), the electrical opening in the sign case, and then through the inside end of the connector.

5. Screw the inside and outside ends of the connector together until water-tight.

TIP Use either of the two holes nearest the power connection terminal block.

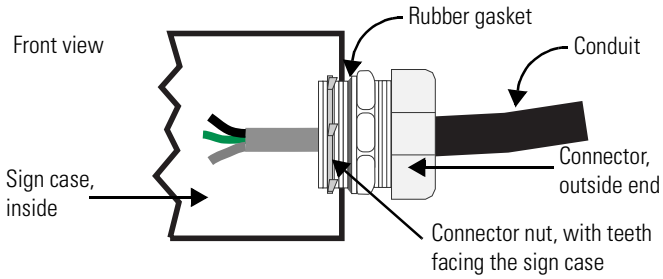

6. Strip the electrical wires back 6.35 mm (0.25 in.).

7. Insert the wires into the appropriate terminal connection and tighten the screw to 0.79 Nm (7 lb-in).

   The terminal block is UL rated for wire ranges of 14 to 8 AWG.

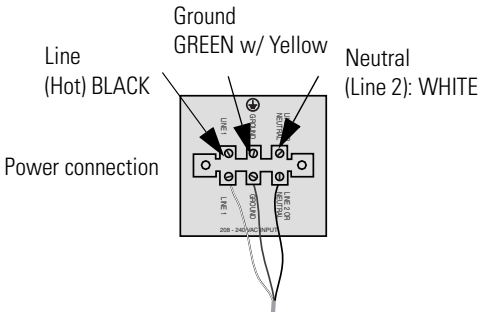

8. Remove the necessary hole plugs before connecting the communications cables.

9. Connect the incoming communication wires per the tables below.

ATTENTION

Use shielded Ethernet cable. Shielded Ethernet cable is required to maintain noise immunity.

The 2706-PCable1 is used for downloading messages only and must be removed after downloading is complete.

TB1 is used for P9x pass-through. TB2 is used for supplying power to the optional InView Legacy Communication board kit.

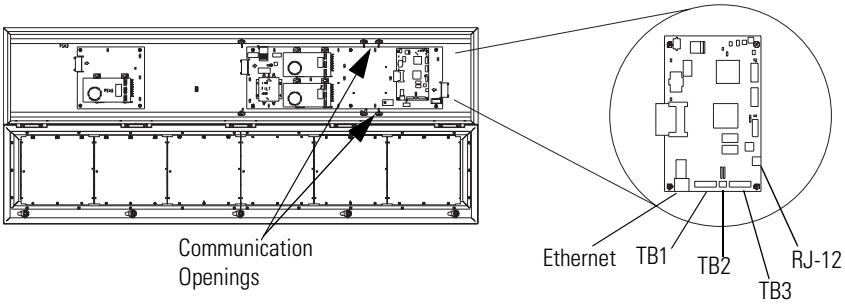

TB1 RS-485

Pin	Pin Name	Pin	Pin Name
1.	GND	4.	CH A
2.	SHLD	5.	CH B
3.	COMM	6.	TERM

TB2 - Aux +5V

Pin	Pin Name	Pin	Pin Name
1.	+5V	2.	GND

TB3 - RS-232

Pin	Pin Name	Pin	Pin Name
1.	TXD	4.	CTS
2.	RXD	5.	GND
3.	RTS	6.	EGND

Ethernet (RJ-45)[1]

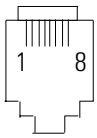

Pin	Pin Name	Pin	Pin Name
1.	TD+	5.	NC
2.	TD-	6.	RD-
3.	RD+	7.	NC
4.	NC	8.	NC

(1) Use shielded Ethernet cable to maintain noise immunity.

Download Port (RJ-12)[1]

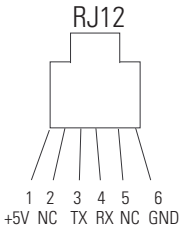

Pin	Pin Name	Pin	Pin Name
1.	Aux +5V	4.	RX
2.	NC	5.	NC
3.	TX	6.	GND

(1) The 2706-PCable1 is used for downloading messages only and must be removed after downloading is complete.

10. Carefully close the front of the sign case and turn the half-turn latches to the right with a large screwdriver.

Mount the 2706-P22R Display

The following provides panel cutout dimensions and overall dimensions for the InView P22R panel mount display.

The InView P22R mounts in a custom panel or enclosure. When it is properly installed, the faceplate provides a NEMA Type 12, 13, and 4X(indoor) rating.

To mount the display:

1. Cut and drill the appropriate mounting holes in the enclosure or panel.

   Refer to Panel Cutout Dimensions for 2706-P22R Display on page 1-23

2. Remove the six mounting nuts and washers from the hardware bag provided with the display.

3. Position the InView Display in the panel or enclosure mounting hole.

4. Install washers and nuts and alternately tighten the nuts to a torque of 0.904 Nm (8 lb-in).

TIP InView P22R mounting and panel cutout are identical to DL40 Plus, DL40, DL20 and DL10 two line displays.

Panel Cutout Dimensions for 2706-P22R Display

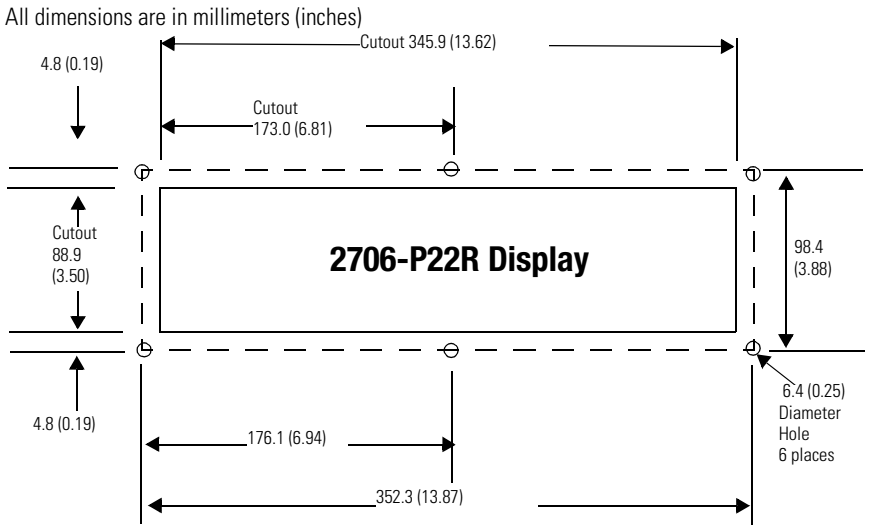

Dimensions for 2706-P22R Display

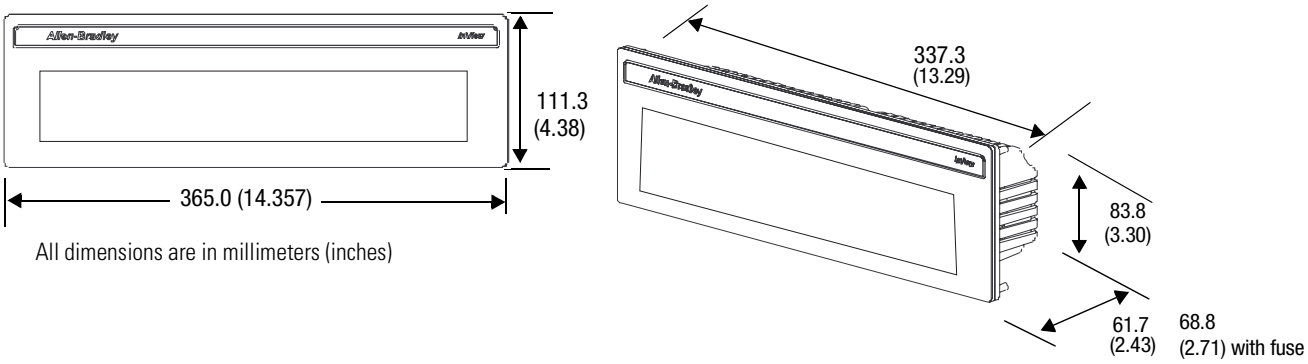

Electrical Connections for 2706-P22R Display

The InView display requires 18 to 30V dc, 0.5 A at 18V dc.

ATTENTION

Before making power connections, make sure that the power is turned off. Improper wiring of the power connections may result in personal injury or damage to the InView display. Make sure the area around the panel cutout is clear. Make sure metal cuttings or debris did not enter any components that may have been installed in the panel.

InView P22R Power Connection

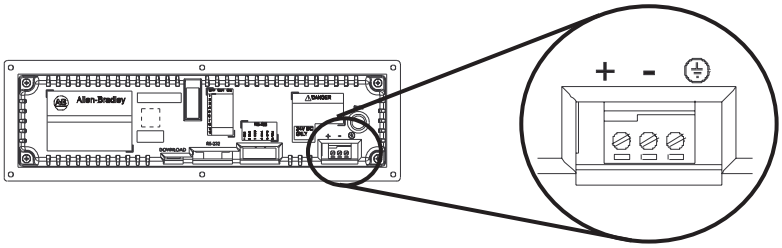

IMPORTANT

To satisfy all agency requirements and ensure proper operation, power this product using a 24V dc, class 2 SELV power supply.

TIP

Use a small screwdriver to remove the terminal block's header to ease product wiring.

Communication Connections for 2706-P22R Display

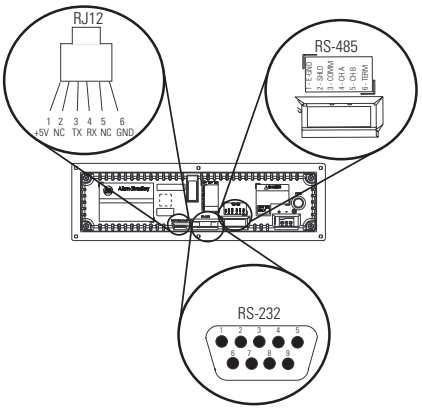

RJ11 Connections

Pin	Pin Name	Pin	Pin Name
1.	+5 V	4.	RX
2.	NC	5.	NC
3.	TX	6.	GND

RS-485 Connections

Pin	Pin Name	Pin	Pin Name
1.	E-GND	4.	CH A
2.	SHLD	5.	CH B
3.	COMM	6.	TERM

RS-232 Connection

Pin	Pin Name	Pin	Pin Name
1.	NC	6.	NC
2.	RX	7.	RTS
3.	TX	8.	CTS
4.	NC	9.	NC
5.	GND		

DIP Switch Settings for 2706-P22R Display

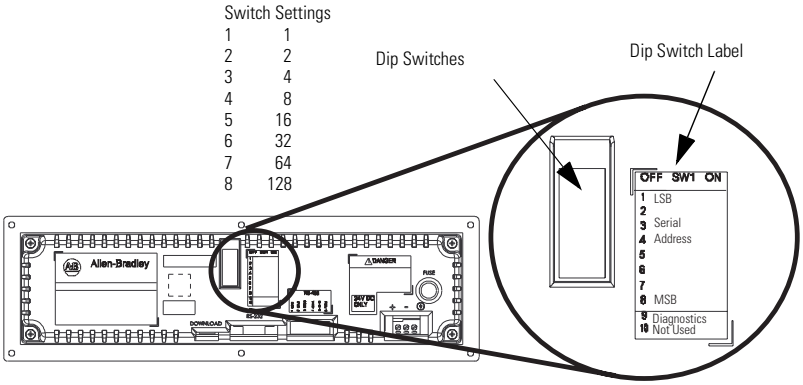

ATTENTION

Disconnect power from the InView display before setting any switch. Switch settings are scanned only on power-up.

Dip Switch Settings

Switch	Switch Setting	Switch	Switch Setting
1.	1 (LSB)	6.	32
2.	2	7.	64
3.	4	8.	128 (MSB)
4.	8	9.	Diagnostics
5.	16	10.	Not Used

Download a Message Application

InView message applications are created using the InView messaging software (2706-PSW1). After creating the Message Application, you need to download it into your InView display memory.

InView applications can be downloaded using:

- Point-to-point serial communications (RS-232) from the communication port on a personal computer.
- Multi-drop RS-485 serial communications. Utilizing a 1761-NET-AIC to convert RS-232 to RS-485 from a personal computer allows you to download to multiple displays over RS-485.
- 2706-PCABLE1 which connects from your PC, running InView messaging software, to the phone jack type connector on your InView display. In larger InView models, this phone jack may be behind the power supply cover.
- EtherNet TCP/IP networking. With the InView 2706-PENET1 EtherNet TCP/IP communication module you can download message applications from a personal computer over Ethernet.

  For more information on this communications option, see publication 2706-IN008.

- InView communication modules. The communication modules allow the displays to communicate on the core Allen-Bradley networks.

RS-232 to RS-485 Networking

With the use of an Allen-Bradley 1761-NET-AIC, you can convert RS-232 to RS-485 and daisy chain InView Displays up to 1219 m (4000 ft).

1761-NET-AIC (AIC+)

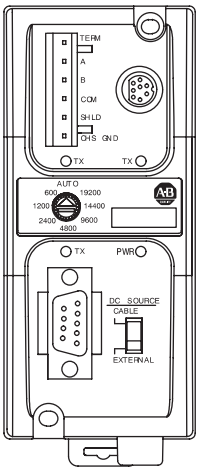

RS-485 Echo

The RS-485 echo feature addresses the issue of increased network traffic often caused by multiple node addresses and high consumption of communication bandwidth. The display's design enables users to daisy-chain numerous InView displays off an InView P9*x* via the RS-485 communication network.

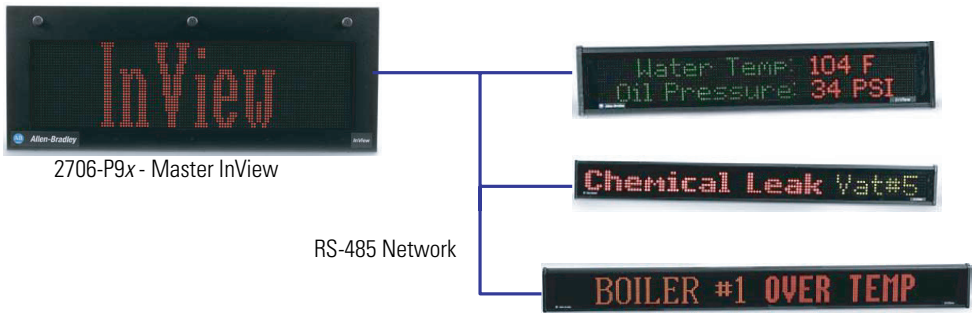

In order to set the 2706-P92C display or the 2706-P94C display as a Master, the echo dip switch must be enabled.

See Dip Switch Information for the 2706-P9x in Chapter 2.

TIP Only one 2706-P9*x* InView display can be set as the master per RS-485 network.

When the echo feature is enabled, all incoming packets, whether it is over the RS-232 port, RJ12 download port, or the RJ45 10/100 base-T Ethernet port, are echoed out the RS-485 port.

An InView master display inspects the incoming packets and determine if the packet is addressed to itself and take the appropriate action. The master shall ignore all packets that are not addressed to itself. The only exception is for a packet with an address of 255. This is the broadcast address and must be accepted by all displays on the network.

TIP When the 2706-P9*x* display, echo feature is enabled, the RS-485 port of the 2706-P9*x* display, does not accept incoming packets. The port is exclusively used to echo out data.

Global Addressing

The 2706-P92C and 2706-P94C displays can both set their serial address to 255, which is the global (broadcast) address. A display with the serial address of 255, accepts all message packets regardless of the address actually given in the packet. This allows the user to route all messages to the 2706-P9*x* InView display.

See Dip Switch Information for the 2706-P9x in Chapter 2, for serial address configuration.

TIP A global address of 255 can only be set by hardware and cannot be set using software.

Ground and Terminate the RS-485 Network

Only one device at either end of the link must have earth ground and shield jumpered together. This provides an earth ground connection for the shield of this communication cable. If the connection is made at an AIC or AIC+, jumper terminals 1 and 2. If the connection is made at a 2706-P4*x* or 2706-P7*x* display, jumper terminals 1 and 8. If the connection is made at a 2706-P22 display, jumper terminals 1 and 2.

Both ends of the network must be terminated. There is an impedance of 120 ohms built into each AIC and AIC+ as required by the RS-485 specification. Jumper terminals 5 and 6 of the AIC or AIC+ for end-of-line termination.

End-of-Line Termination for AIC and AIC+

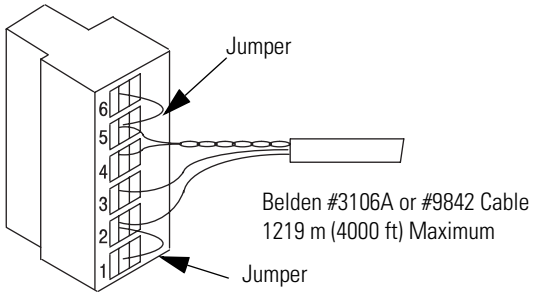

Network Wiring

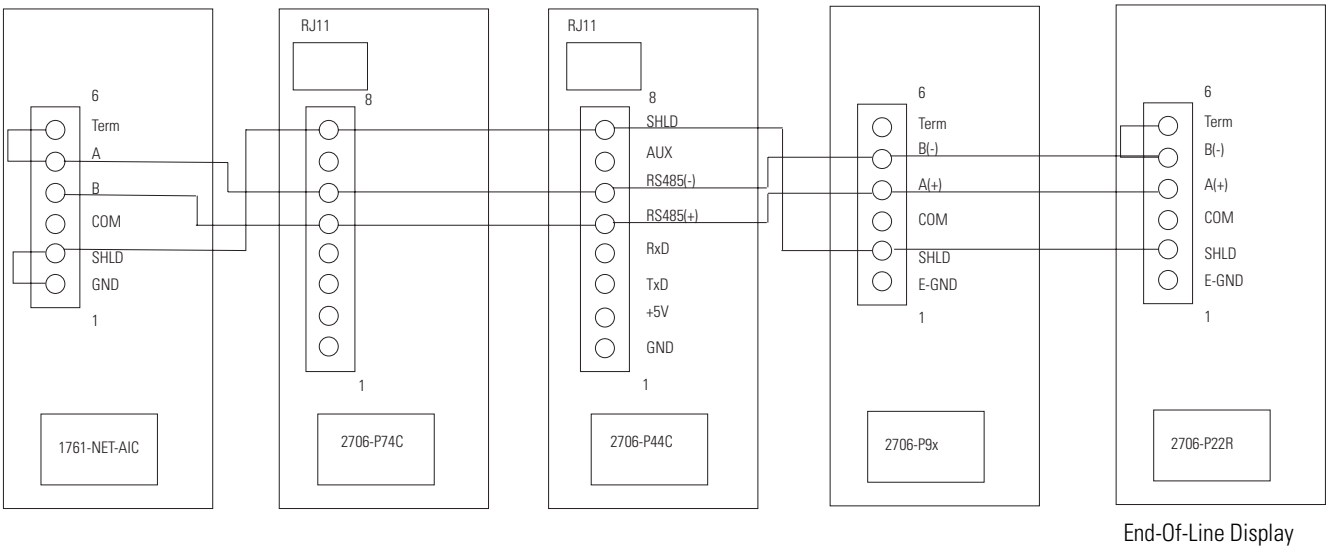

TIP End-of-line InView display should have terminating resistor in RJ11 (P1). If a 2706-P22R display is the end-of-line display, jumper terminals 5 and 6. There is a built in impedance of 120 ohms similar to that of the AIC and AIC+.

InView System Connectivity

This chapter demonstrates how the InView display connects to control networks. In the following chapters we show controller configuration and sample ladder for serial ASCII networks. This chapter also discusses how to set-up the display attributes, communications and create messages.

Serial ASCII Communications

Refer to Chapter 3 for more information on Serial ASCII communications from Channel Zero of an Allen-Bradley controller.

Serial Connections

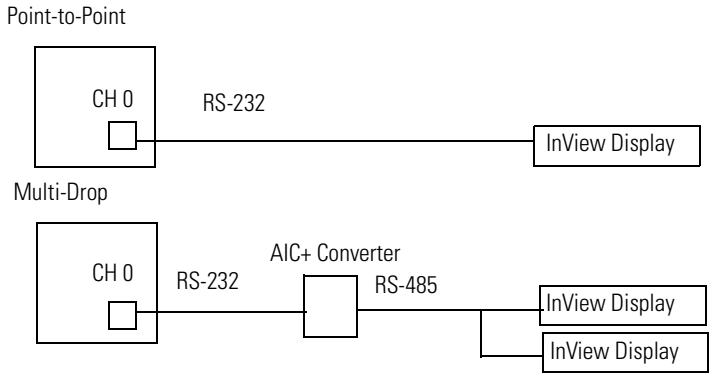

Features

The features are separated into sections for the 2706-P4*x* and 2706-P7*x* displays and the 2706-P22R displays.

2706-P42, 2706-P43, 2706-P44, 2706-P72, and 2706-P74 Displays

These displays operate at 100 to 240V ac. They have an eight position terminal block that contains an auxiliary +5V dc, RS-232 signals, and RS-485 signals. There is also an RJ-12 port that is in parallel with the RS-232 signals from the terminal block. The RJ-12 port is used primarily for downloading messages to the display via the 2706-PCABLE1 download cable.

TB1 Connections

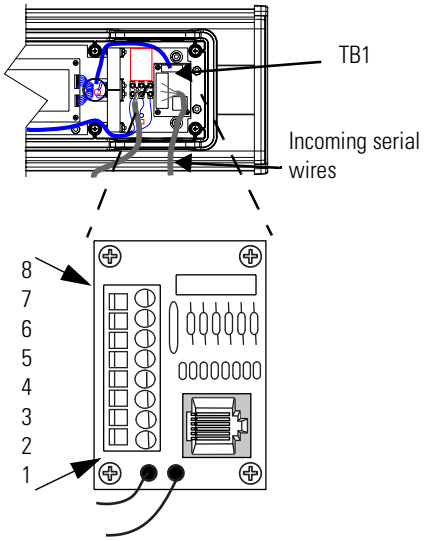

These displays have a single channel UART and therefore can only have one of the three communication options connected at a time.

- RJ-12
- RS-232 terminal block connections
- RS-485 terminal block connections

TB1 - Full

Pin	Pin Name	Pin	Pin Name
1.	GND	5. GND	RS-485(+)
2.	+5V	5. +5V	RS-485(-)
3.	RS-232 TX	6. RS-232 TX	NC
4.	RS-232 RX	7. RS-232 RX	SHIELD

2706-P22 Display

This display operates at 18 to 30V dc. It has three communication ports. These are the RJ-12, DB-9, and a six position terminal block ports. The RJ-12 port is used primarily for downloading messages to the display via the 2706-PCABLE1 download cable. The DB-9 port is used for RS-232 communications and the signals are in parallel with the RJ-12 port. Therefore, only one of the ports may be connected at a time. The six position terminal block is used for RS-485 communications. The 2706-P22R display has a two-channel UART. This means that one of the RS-232 ports and the RS-485 port can be connected at the same time.

2706-P22R Display Communication Connections

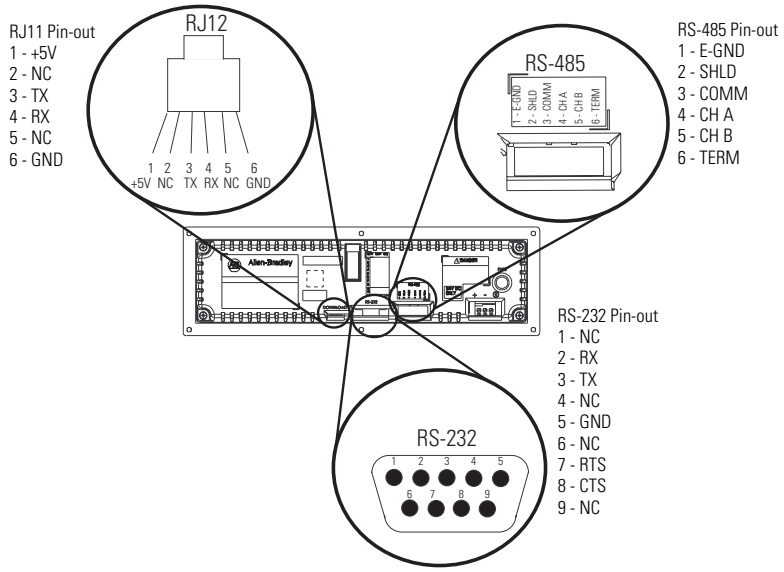

RJ11 Connections

Pin	Pin Name	Pin	Pin Name
1.	+5 V	4.	RX
2.	NC	5.	NC
3.	TX	6.	GND

RS-485 Connections

Pin	Pin Name	Pin	Pin Name
1.	E-GND	4.	CH A
2.	SHLD	5.	CH B
3.	COMM	6.	TERM

RS-232 Connection

Pin	Pin Name	Pin	Pin Name
1.	NC	6.	NC
2.	RX	7.	RTS
3.	TX	8.	CTS
4.	NC	9.	NC
5.	GND		

The 2706-P22R display has a ten-position dip switch. The first eight positions are used to set the address of the display. Position nine is used to put the display in diagnostic mode. Position ten is a spare. The dip switch is read only on power-up.

The diagnostic mode causes the display of LED patterns to visually indicate if any pixels are not turning on. It also performs a memory check.

IMPORTANT After one complete LED scan is done, a RAM check is performed and the display's memory is cleared. To ensure that the display's memory is not cleared, turn off power to the display after the LED block test is performed. Make sure that the download or message file has been saved before diagnostic test is allowed to run completely through.

2706-P22R Display Dip Switch Settings

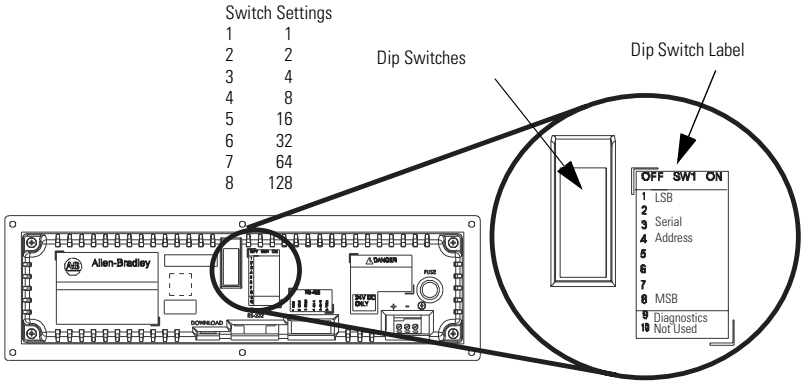

Dip Switch Settings

Switch	Switch Setting	Switch	Switch Setting
1.	1 (LSB)	6.	32
2.	2	7.	64
3.	4	8.	128 (MSB)
4.	8	9.	Diagnostics
5.	16	10.	Not Used

Dip Switch Information for the 2706-P9*x*

There are two dip switches located on the controller board, Switch 1 and Switch 2.

2706-P9*x* Dip Switch

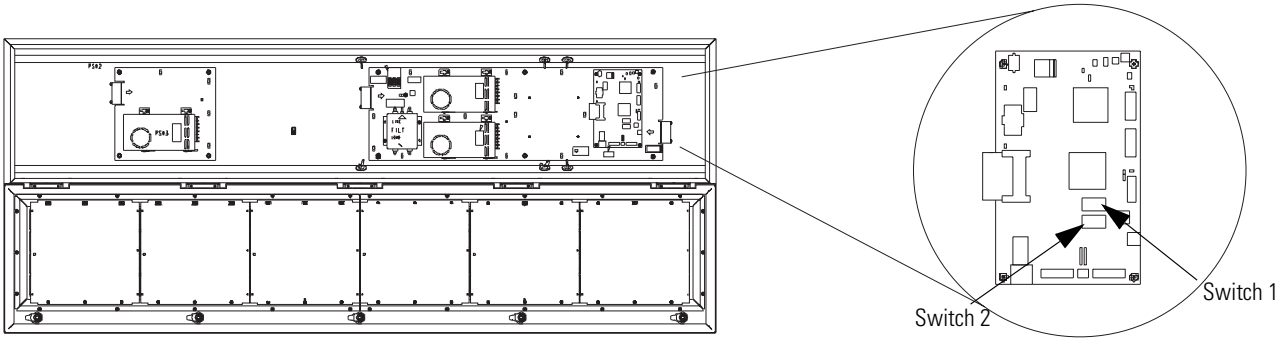

Switch 1

Switch 1 is used to configure the display's RS485 echo enable, communication rate settings, and display size.

Position 1 enables or disables the echo function.

When you enable the RS485 echo function, this allows any packets that come in on COM 0 (download, RJ-12 port), COM 1 (RS-232, TB3 port), and the Ethernet TCP/IP port to be sent out the RS485 port. This allows Ethernet TCP/IP and other communication protocols to be converted to RS485 by a single 2706-P92 or 2706-P94 and then sent out to multiple RS485 networked displays.

TIP Only enable the echo function on one 2706-P9*x* display.

Positions 3 and 4 set the communication rate.

Refer to page 2-6 for default positions.

If both switches are off, the communication rate can be set via the InView messaging software. The dip switches take priority over the software setting. If the communication rate is set to 19200 using the software (positions 3 and 4 set to off) and then set to 9600 using Switch 1 (position 3 on and 4 off), the communication rate is 9600. Also, once positions 3 and 4 are used to set the communication rate and then they are switched off, the communication rate setting remains until it is changed by software or a different dip switch setting.

Position 5 is used to set the display size. This is set by the factory.

Position 6 is used to turn on diagnostics.

Position 7 disables download message.

Switch 2

Switch 2 is used to set the serial address of the display. Position 1 is the LSB of the address and position 8 is the MSB of the address.

If position 1 is on and all other positions are off, the display address is 1.

If position 8 is on and all other positions are off, the display address is 128.

If all positions are set to off, the serial address is set using the InView messaging software.

The dip switch setting takes priority over the software setting. If the serial address is set to 2 using the software (all the dip switches set to off) and then Switch 2 is used to set the serial address to 3 (position 1 and 2 set to on and the remaining positions set to off), the serial address is 3. Also, once Switch 2 is used to set the serial address and then all switch positions are set to off, the serial address setting remains until it is changed by software or the dip switch is set.

.2706-P9*x* Dip Switch Settings

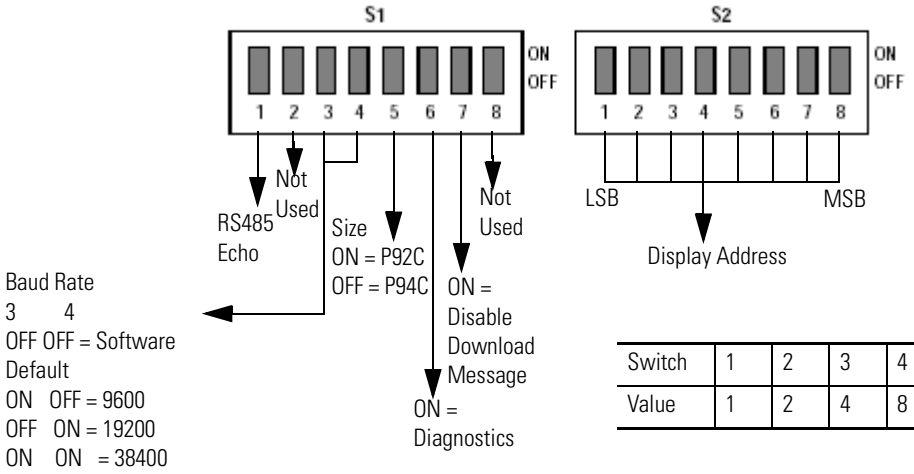

Switch	1	2	3	4	5	6	7	8
Value	1	2	4	8	16	32	64	128

Additional Information for 2706-P9*x* Displays

For additional information on communication port wiring and display configuration, refer to the InView Marquee Message Display User Manual, publication 2706-UM016.

This product contains a Lithium battery. See publication 2711P-IN009 for information regarding battery replacement and disposal.

Communications Board Kits

There are optional Communications Board Kits available for the 2706-P9 series displays. There are a total of six board kits:

- Remote I/O (2706-PRIOK)
- DH+ (2706-PDHPK)
- DH-485 (2706-PDH485K)
- ControlNet (2706-PCNETK)
- DeviceNet (2706-PDNETK)
- EtherNet/IP (2706-PENETK).

The Communications Board Kits convert the six protocols to RS-232. The board kit mounts on the four PEM spacers that are attached to the internal mounting plate.

See publication 2706-IN015 for more information on how to install the board kits.

Spacer Location

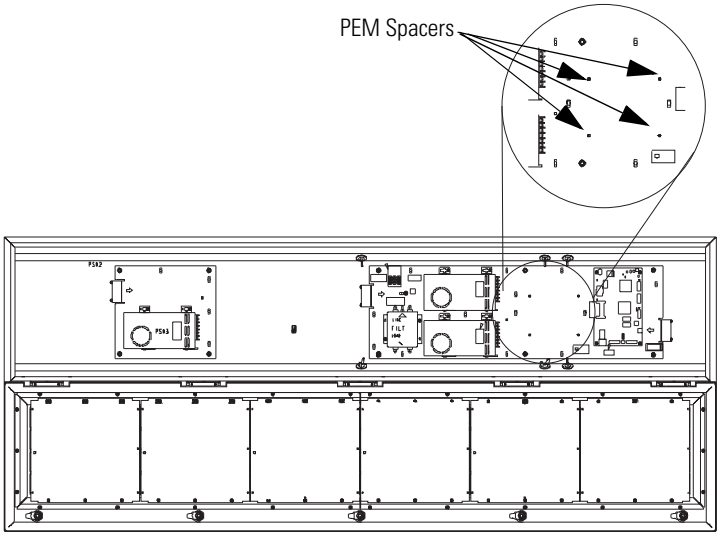

Compact Flash Card

This product uses a Type I Compact Flash Card for message file storage.

Refer to publication 2706-IN017 for information on replacement and installation of the Compact Flash Card.

Multiple Communication Rate Support

The 2706-P92C and 2706-P94C displays allow the user to select serial communication rates of 9600, 19200,or 38400 bps. The communication rates are both hardware (dip switches) and software selectable.

TIP For selecting the communication rate using the dip switches, see the section entitled Dip Switch Settings

The communication rate of the display is set using the InView messaging software, provided the communication rate dip switches are all off.

To set the communication rate using the messaging software:

1. Highlight the 2706-P9*x* display you wish to set the communication rate.

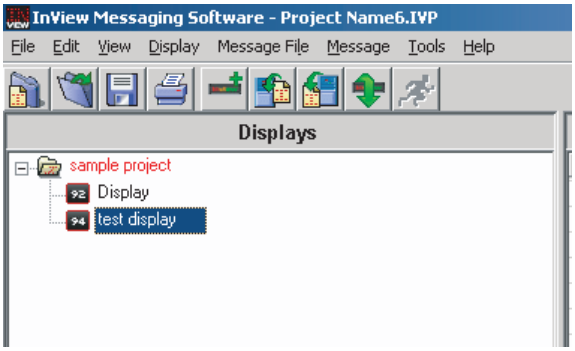

2. Select Set Display Baud Rate under the Tools menu.

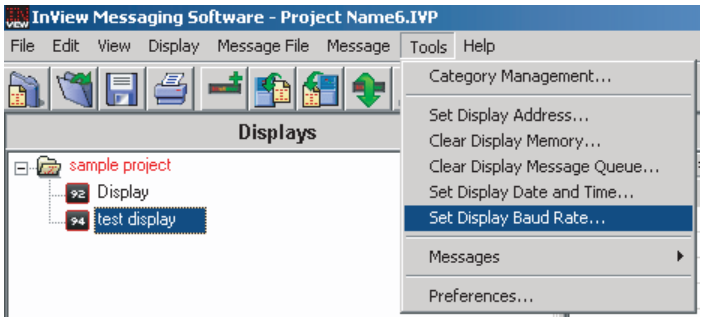

3. Choose the communication rate you wish to set the display at and click on the Set button.

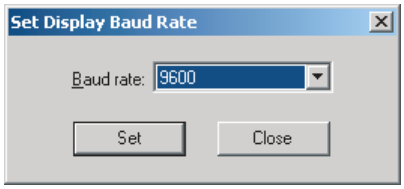

TIP There is no confirmation that the command was sent. The display must be power cycled to view the new communication rate settings.

Isolated Communication Ports

The isolated communication ports consist of RS-232, RS485, 10/100 Ethernet port and a RS-232 download port. This allows the 2706-P92C and 2706-P94C displays to support multiple networks simultaneously. This allows programmers to change the messages or tie into an information database, while control operators can continue delivering alarms and messages to the plant floor.

Isolated Communication Ports

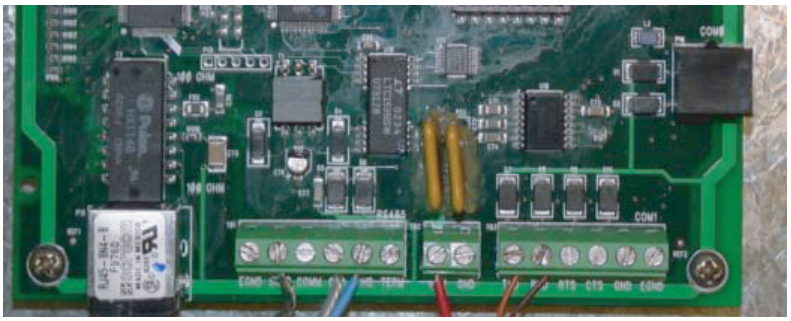

Flash Programmable Firmware

The programmable Compact Flash card is located inside the 2706-P9*x* display on the controller board as shown below.

TIP The Compact Flash card must be at least 32 MB, anything less is not supported.

Compact Flash Card

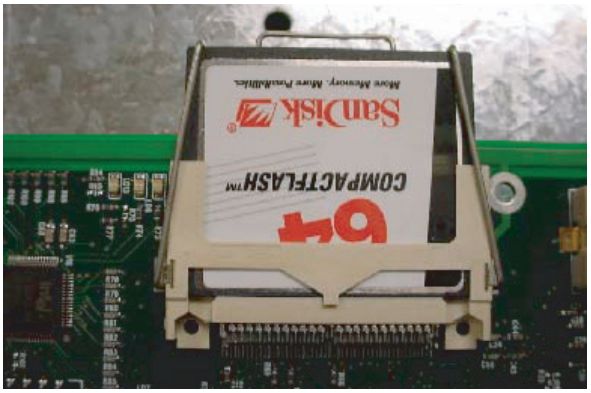

Power-up Messages

After the power cable and the download cable (attaches to the RJ-12 port) have been attached per the installation document, apply power to the display.

TIP If a display is connected to Ethernet via TCP/IP by using a 2706-PENET1 module or a 2706-P9*x* display is connected to Ethernet via TCP/IP, the display configuration and message download can be done over Ethernet. For more information on this communication option, see publication 2706-IN008.

2706-P42, 2706-P43, 2706-P44, 2706-P72, 2706-P74, 2706-P92, and 2706-P94 Displays

After power is applied to the display the following messages are displayed.

- firmware number and revision
- memory size and partition
- memory checksum message
- date and time
- address of the display; and background message, if one was created

2706-P22: Display

After power is applied to the display the catalog number, firmware revision, and address is displayed on one screen. Then the background message is displayed.

See the help file for more details on the following topics.

Display Setup

To set up your display:

1. Start the InView messaging software.
2. Create a project.

   The software prompts for a project file name, a project name, and description. Once this is done, the project name and description appears in the Displays box.
3. The software then prompts for a display name, display description, display type, and the number of that particular display that is used in the system (1 to 100 of the same display type).
4. Select one for the number of displays (once displays have been assigned a unique address, more than one can be added at once).
5. Select Next.
6. The software then prompts for the address of the display, heartbeat, TCP/IP settings (if applicable), and the serial com port settings.

   Use the default settings of 9600, None, 8, and 1.
7. Select Next.
8. When the software prompts for a message file association, check Create a New Message File.
9. Enter the message file name and select Finish.

   The message editor window is displayed.

Set the IP Address

For the 2706-P22, 2706-P4*x*, and 2706-P7*x* terminals, separate communication modules are needed to place the display on the network. The 2706-P9*x* displays have Ethernet TCP/IP built in. To add any other network protocol to the 2706-P9*x*, a separate communication module is needed.

The Ethernet TCP/IP configuration utility is installed as part of the Inview messaging software package. When first opening the InView messaging software, you are asked to create a display and a message file. After the display is created you can configure the IP address of the 2706-PENET1 module.

The 2706-PENET1 module is the communication interface for Ethernet TCP/IP. This module is used with the 2706-P22, 2706-P4*x*, and 2706-P7*x* displays. The 2706-P9*x* displays have this protocol built in. Note that the 2706-PENET1 is Ethernet TCP/IP or Office type Ethernet and is not Ethernet I/P, which is Ethernet Industrial Protocol available on Rockwell Automation logic controllers.

To set the IP address:

1. Select the display you created, which use a the Ethernet module.

2. Right click on the display and select Edit Display.

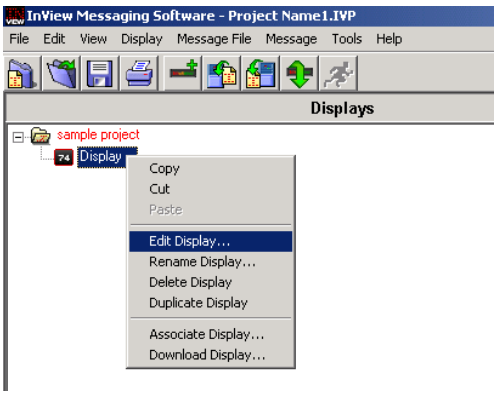

TIP Double-clicking on the display takes you to the same window.

3. When the Edit Display window appears, go to the Communications tab.

   This is where the configuration utility is located.

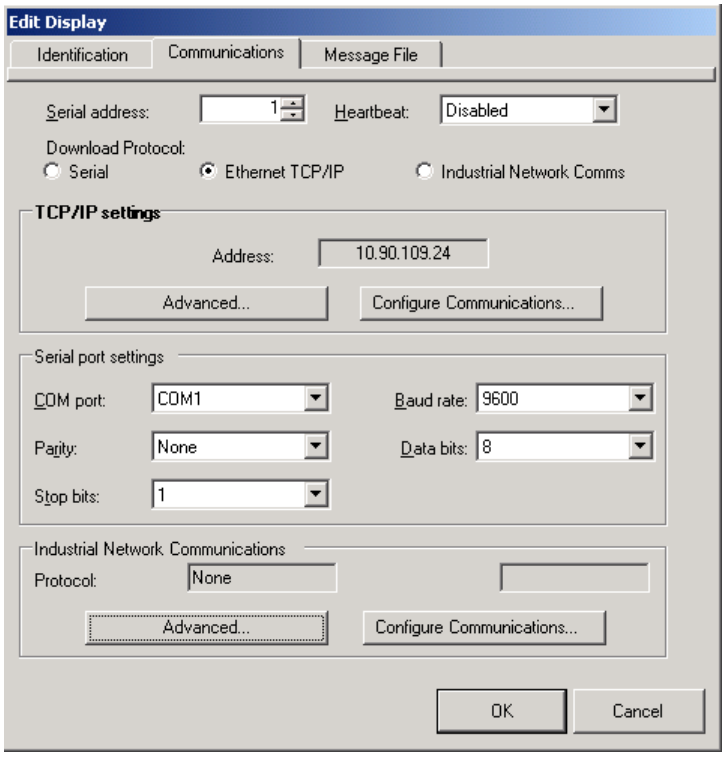

Under the section with the heading TCP/IP settings is the Configure Communications button.

4. By clicking this button you are taken to the Ethernet TCP/IP Communications window.

   This is where the IP address will be set.

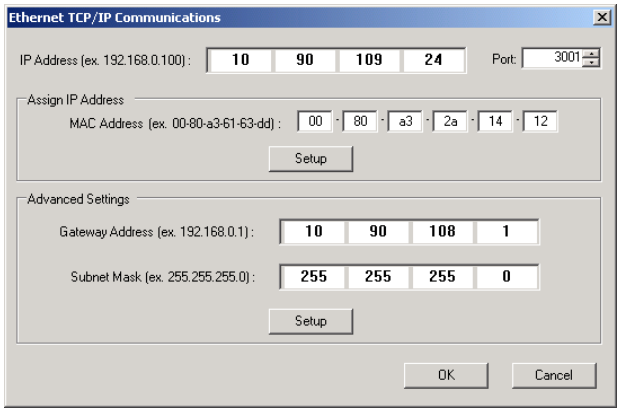

5. At the top of the window labeled IP Address, enter the desired IP address.

6. Enter 3001 for the Port if using a 2706-PENET1 module.

7. Enter the MAC Address of the module under the heading Assign IP Address.

   The MAC Address is found on the module itself.

TIP The 2706-P9*x* display does not use MAC Address. IP Address changes must be done serially.

8. Click the Setup button located in the section titled Assign IP Address once the desired IP Address, Port, and MAC Address have been entered.

   If the IP Address is already in use, an error message window appears.

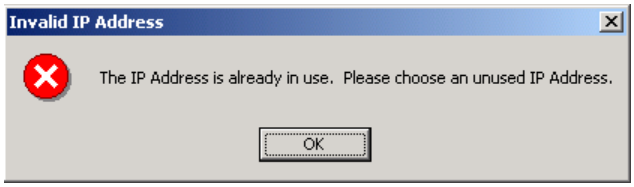

TIP If the Invalid IP Address window appears, click OK, choose a different desired IP Address, and click the Setup button again. Once a valid IP Address is entered, the following window should appear saying it is ready to assign an IP address.

As the message instructs, you need to either turn the display on or power cycle the display if it is already turned on. Upon successfully assigning an IP Address the following window appears.

Gateway Address and Subnet Mask Setup

Set up the Gateway address and Subnet Mask if needed based on your Ethernet Network configuration. Default values typically are for Subnet Mask, 255.255.255.0 and as a default the Gateway address is left blank.

Subnet Mask is a parameter that interprets IP addresses when the network is divided into multiple networks. The IP address is formatted as four sets of decimal numbers with periods between them (255.255.255.1). The range of values for the first set of decimal numbers is 1 to 255. The range of values for the last three sets of decimal numbers is 0 to 255. The value 0.0.0.0 is not a valid subnet mask.

Gateway Address is a unique address of the Gateway connecting two individual IP networks into a system of networks. When a node needs to communicate with a node on another network, the Gateway transfers the data between the two networks. The IP address is formatted as four sets of decimal numbers (from 1 to 255) with periods between them (130.0.0.1). The first field cannot be 0 if any other fields contain a 0.

Once the desired Gateway Address and Subnet Mask have been entered, click on the Setup button located just below where the Subnet Mask was entered. If for some reason, the settings are not received by the 2706-PENET1 module, the following error message will appear.

However, upon successfully setting up the Gateway Address and Subnet Mask, the following message appears telling you to cycle power to the module.

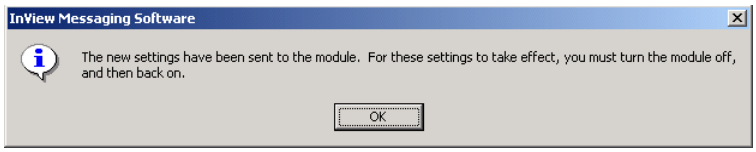

After the IP Address, Gateway Address and Subnet Mask have all been established, click the OK button on the bottom of the Ethernet TCP/IP Communications window. This allows the settings to be saved and configuration is now complete.

Once the settings have been saved, they can now be viewed by clicking on the Advanced button located in the section titled TCP/IP settings on the Edit Display window.

Create the Message File

A background message of Rockwell Automation is automatically created. This is also indicated by the letter B in the message list below the message creation box. Message number 1 is highlighted and ready for creation. Create a message by typing in the message box. Attributes for the messages can be changed or added using the pull down menus located above the message creation box or from the toolbar. Once message number 1 has been created, select the down arrow or type 2 in the box and select the Goto button. This allows message number 2 to be created.

There is a size displayed in the lower right of the window. This is the size of the message that is being created. This number starts from 11 and increases to a maximum number that is determined by setting the partition size in software. This is based on a total of 200,000 bytes. The smaller the partition size the more messages are available. The limits are 450 bytes per message, 444 messages minimum to 50 bytes per message, 4000 messages maximum. To change the partition size, select File then Partition.

See the following sections for more information regarding the message attributes.

Message File Additional Information

Task	Page
Attach a Note to a Message	2-17
Text Color	2-17
Date, Time and Variables	2-17
Category	2-18
Message Priorities	2-18

Message File Additional Information

Task	Page
Pause	2-19
Message Header	2-19
Preview Messages	2-19
Set the Display Address	2-19
Download Messages	2-20
Clear Memory/Message Queue	2-22

Attach a Note to a Message

Select a message from the message list. Select Tools and Edit Note. Then a Message X Note window appears. The X is the message number for the message that a note is being created for. These message notes can only be viewed with the InView messaging software and are not downloaded to the display.

Text Color

There are three color options if a display is classified as color. They are red, green, or yellow. The color of the message is the color that is selected. The color of individual text within the message is changed by inserting a color before the text. The text after the color insert stays that color until a new color insert is performed.

Date, Time and Variables

The date, time and variables are also inserted into a message. These are found under the Edit menu then Insert or via the toolbar buttons. If inserting the date, a pop-up window appears and shows various formats and a pre-viewer that displays the data for the selected format. If inserting a variable, a pop-up window appears that allows the selection of the variable number and whether the variable is numeric or alpha numeric. The maximum number of variables per message file is 100 (00 to 99). The numeric variable ranges from 32,767 to -32,768 decimal. It also allows the selection of the type of padding and a check box for a sign (+/-). An alpha numeric variable is ASCII text except for the “. It also varies in length from 1 to 128 characters. There is a pre-viewer that displays the options selected. The format for the time is either standard or military. The selection for this is found in the

InView configuration window (the project window) under Tools and Set Display Date and Time. Note that the time format is set for each display individually by address. The default format is standard. The data and time is also set here.

Category

The Category option is used to assign categories to messages. This helps in organizing messages for certain operations and when performing a find.

Message Priorities

The Priority option is used to give messages a priority of low, medium, and high. As an example, a normal operating water temperature reading of a generator is a low priority message. A pre-alarm message of high water temperature is a medium priority message. An alarm message of high water temperature shutdown is a high priority message.

In our example, the water temperature is part of the generator signals that are constantly being monitored and displayed as low priority signals in the message queue (the message queue can hold up to 64 messages). When the water temperature rises above a pre-alarm threshold, the medium priority high water temperature message is added to the message queue. When this happens, only medium priority messages are displayed. If other medium priority messages were added to the queue, they are also displayed until a high priority message is added to the queue. When the water temperature rises above an alarm threshold, the high priority high water temperature shutdown messages are displayed.

In order to view the low priority messages, the medium and high priority messages need to be removed from the message queue.

See InView Protocol, Chapter 4, for information on how to add or remove messages from the message queue.

Pause

The Pause option determines how long a message is displayed when a message queue (two or more messages are being displayed due to a download and display or messages were added to a message queue) is running.

See InView Protocol, Chapter 4, for information on how to messages to the message queue.

Message Header

A header is added to a message by clicking the H button. Once this button is clicked, the button appears depressed and any text in the message creation box shifts from the top line to the bottom line.

Preview Messages

Messages are previewed before downloading. This option is found under the View menu then Preview Mode or by clicking the magnifying glass button.

After the message file is created, exit the message editor. The message file is automatically saved as it is created. If an edit is needed to a message file, double click a message in the Message File Details list in the project window. This brings up the message editor window.

Set the Display Address

All displays except for the 2706-P9x and 2706-P22R displays must have their addresses set through software. The factory default address setting for all InView displays is 01. This is the old address when setting up the display for the first time. To set the display address using the software, select Tools and Set Display Address. The display communication settings (com port and communication rate, or TCP/IP settings) should have been set when the display was added to the project.

The 2706-P22R display address is set either in the software using InView messaging or by using the dip switch. The first eight positions of the dip switch are used for setting the display address. If all the dip switches are off, the address is set in the software. If any of the first

eight dip switch positions are on, this is the display address and the software setting is overwritten. Once an address is selected by the dip switches, it is retained until it is overwritten by the software (only done when all switches are off) or the dip switches are changed.

Once a unique address has been set, future display properties and message communications are done to networked signs via RS-485. Message downloads, communications, and display properties are done to networked signs via Ethernet TCP/IP.

See the 2706-PENET1 pdf in the Product Literature folder on the InView Messaging Software CD for more information on using this communication option.

Download Messages

Once the message file has been created, there are several download options.

- Download the entire file - Download Message File and Broadcast Download
- Download selected messages - Download Message
- Download and display selected messages - Trigger Message and Broadcast Trigger Message
- Message broadcast – Broadcast Download Message

A pop-up window appears when any of these options, except for broadcast, are selected. This window allows the selection of which displays to download to.

TIP Assign the address and communication settings for each display before any messages are downloaded. These options are found under Message File and Message.

Download Message File and Broadcast Download

Broadcast Download downloads the entire file to all displays on the network. Download Message File downloads the entire file to the display specified. Download Message File and Broadcast Download overwrite the old messages starting at message number one to where the new messages end. If the old message file has more messages than the new message file, the old messages above the new message

file end remains. For example, the old message file had messages 1 through 10 and a background message. The new message file has messages 1 through 2 and a background message. After the new message file is downloaded, the new message file contains new messages 1 through 2, a new background message, and old messages 3 through 10. If the new message file does not contain a background message, the background message is blank. If just the new message file is to be retained in memory, a clear memory operation should be performed before downloading a new message file. This erases the entire memory of the display.A message trigger or addition to the queue is required in order to view the downloaded messages.

See InView Protocol, Chapter 4, for information on how to trigger a message or add it to the queue.

Download Message

Download Message downloads only those messages selected from the message list. To select messages, highlight them from the Message File Details box in the InView messaging software (project) window. Once they have been downloaded, the display behaves the same as if the entire message file were downloaded. A message trigger or addition to the queue is required in order to view the downloaded messages.

See InView Protocol, Chapter 4, for information on how to trigger a message or add it to the queue.

Trigger Message and Broadcast Trigger Message

Trigger Message and Broadcast Trigger Message allows up to 64 messages selected from the message list to be displayed after download. This is the message queue. Each message is displayed for the amount of the pause time that is set when the message is created.

TIP Only messages of the highest priority are displayed. When using this option, ensure that all the messages have the same priority.

If new messages are downloaded using this option, a clear message queue command is done before the messages are downloaded. The old messages are erased and replaced with the new ones. Broadcast Trigger Message downloads the selected messages to all displays on the network.

Clear Memory/Message Queue

These options are found under Tools then Clear Display Memory and Clear Display Message Queue. The clear memory option erases the entire memory of the display. Memory Cleared is displayed and then the display goes through a reset cycle. The clear message queue option just erases the queue, not the display memory. If there is a background message, it is displayed after a clear message queue command has been issued.

Serial ASCII Communications

Use a PLC5 out Channel Zero

To use a PLC5 out Channel Zero on a display:

1. Create a new application.
2. Set up the channel configuration.

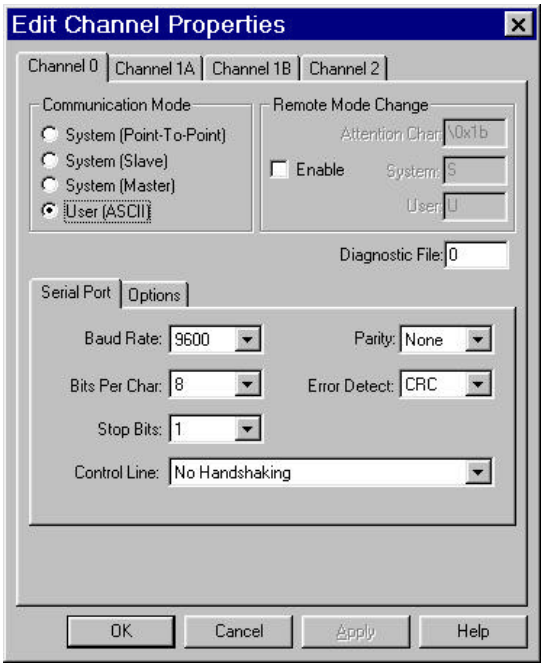

3. Create a file type String (ST).

   This is where the user inserts the ASCII/Hex commands.

4. Set up the ladder logic.

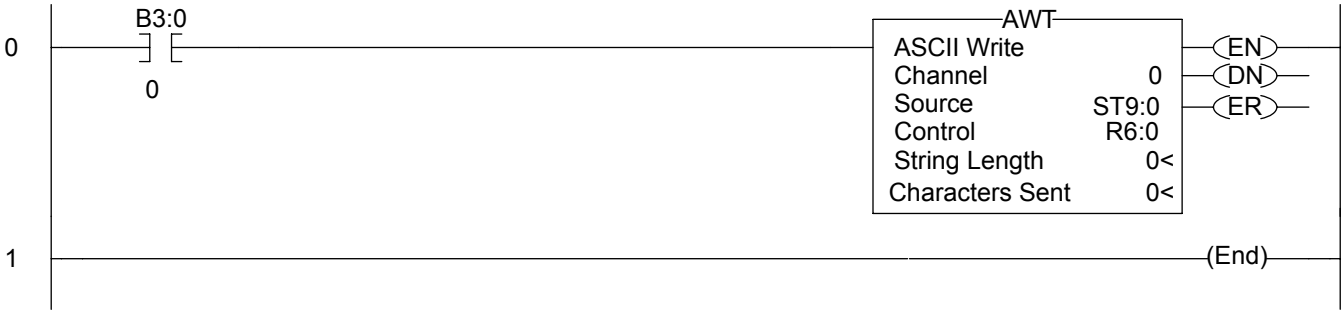

Use an SLC 5/03, 5/04, or 5/05 out Channel Zero

The SLC processor is set up very similar to the PLC processor. The SLC processor uses the same ladder logic as the PLC processor shown below.

To use an SLC processor out Channel Zero on a display:

1. Create the new application and then set up the channel configuration as shown.

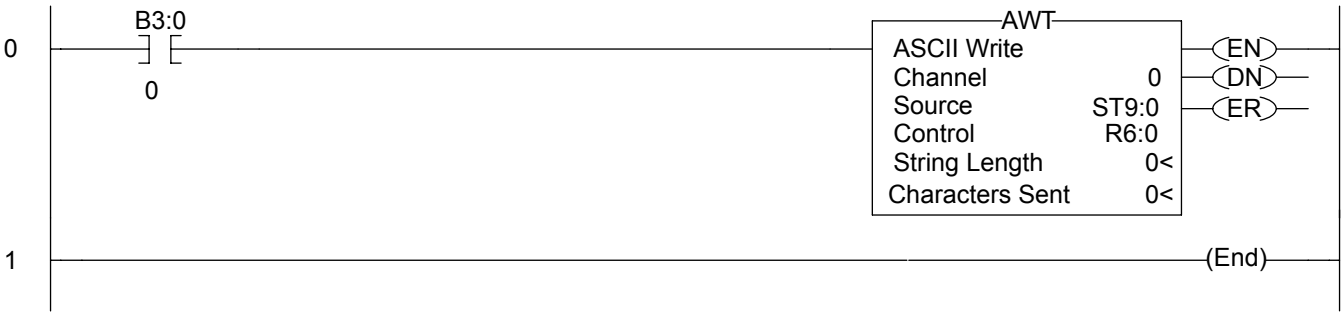

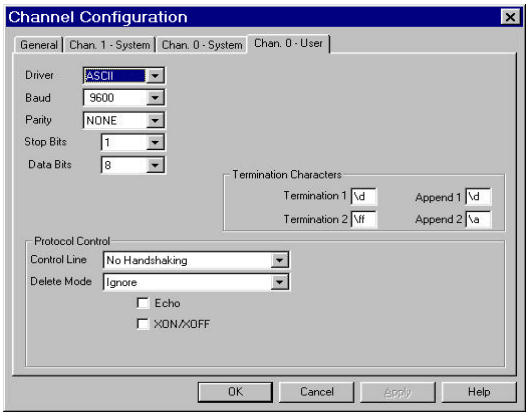

2. Under the general tab make sure the mode for channel 0 is set to USER.

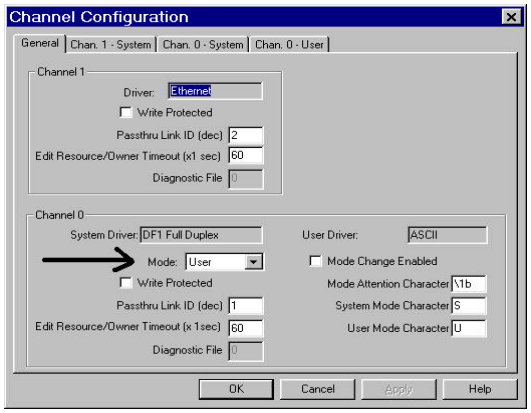

Use a MicroLogix out Channel Zero or One

The MicroLogix processor is set-up similar to the SLC processor. They both use RSLogix500 software to communicate, however the channel configuration and ladder is slightly different.

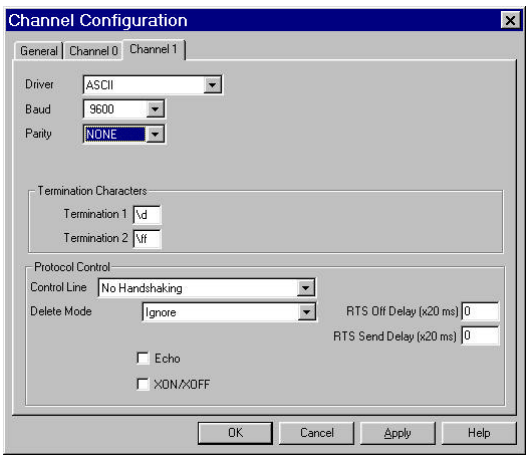

With the MicroLogix processor, the user can download with either channel 0 or 1 and can also write ASCII using channel 0 or 1. In this example the ASCII is done using channel 1.

Use ControlLogix Processor out Channel Zero

To use a ControlLogix processor out Channel Zero on a display:

1. Open a new application.
2. Set up the controller properties by right-clicking on the controller name and selecting properties and then the serial port tab as follows:

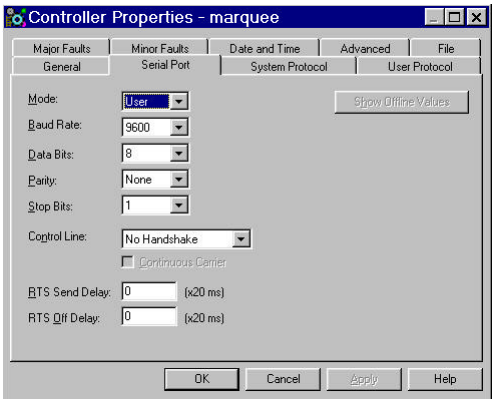

3. Set up ladder logic and controller tags.

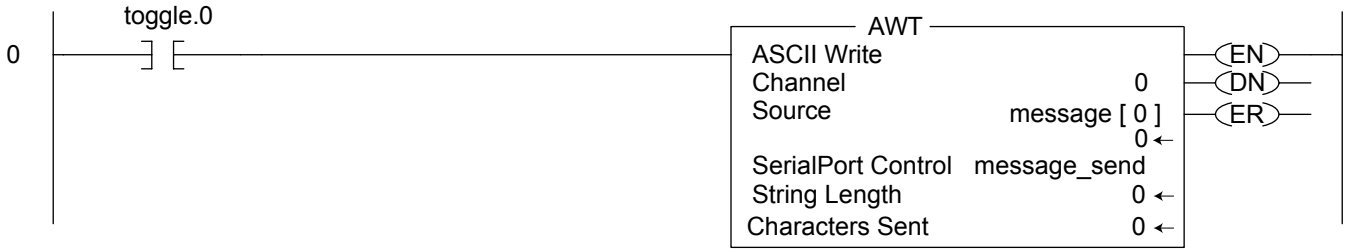

4. The tag set-up for this example is:
   - Toggle is of type DINT
   - Message_send is of type SERIAL_PORT_CONTROL
   - Message is of type SINT[50]

Use the CompactLogix Processor out Channel Zero or One

To use a CompactLogix processor out Channel Zero on a display:

1. Open a new application.
2. Set up the controller properties by right-clicking on the controller name and selecting properties and then the serial port tab.

   The ladder is the same as a ControlLogix except that the user can select either channel zero or one.

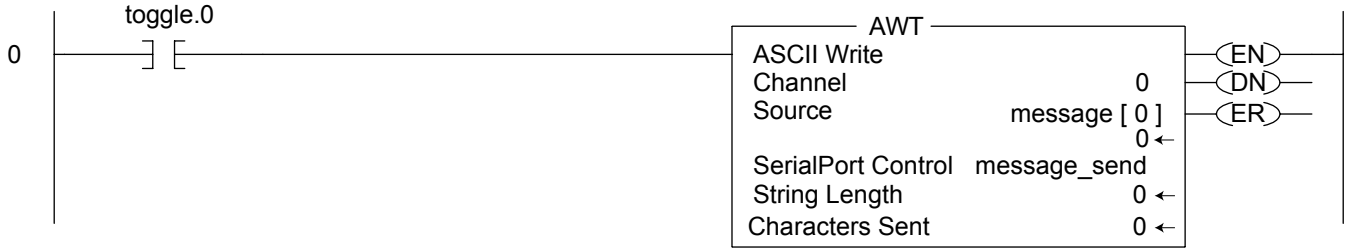

3. The tag set-up for this example is:
   - Toggle is of type DINT
   - Message_send is of type SERIAL_PORT_CONTROL
   - Message is of type SINT[50]

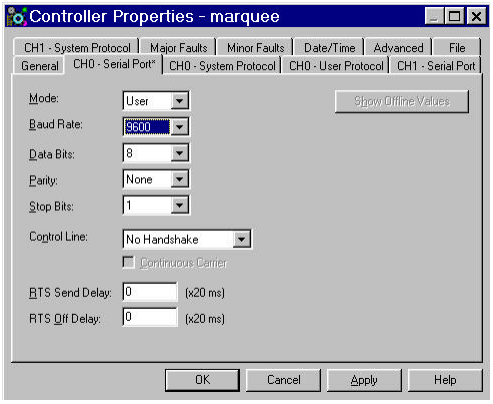

TIP This same setup would need to be done for CH1 - System Protocol if using channel one instead of channel zero.

Use FlexLogix Processor out Channel Zero

To use a FlexLogix processor out Channel Zero on a display:

1. Open a new application.
2. Set up the controller properties by right-clicking on the controller name and selecting properties and then the serial port tab.

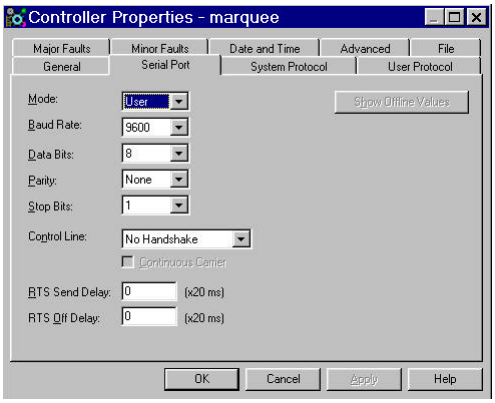

3. Set up ladder logic and controller tags.

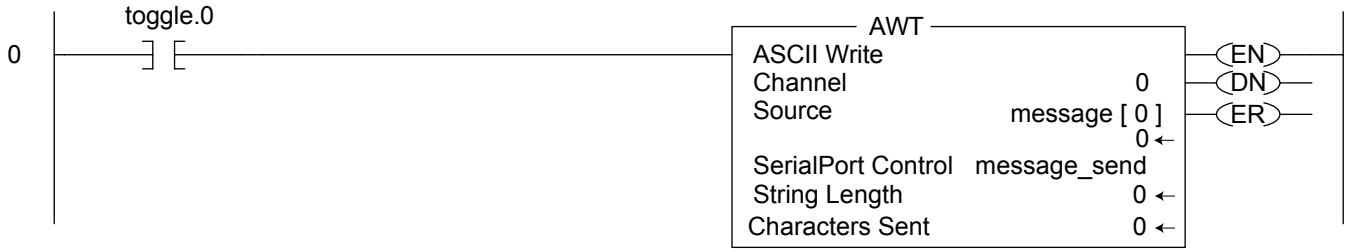

4. The tag set-up for this example is:
   - Toggle is of type DINT
   - Message_send is of type SERIAL_PORT_CONTROL
   - Message is of type SINT[50]

InView Protocol

Introduction

The purpose of this chapter is to show the protocol that is required to trigger messages and update variables on InView displays with the InView protocol.

In general, messages are downloaded through the software and stored within the display memory. Up to 4000 messages and 100 (0 to 99) variables can be created with the InView software.

Messages are displayed using the Control-T function or Modbus ASCII. One of three different methods can be used.

- Priority messaging
- Add a message
- Remove a displayed message

Variables are updated using the Control-V function or Modbus ASCII.

Trigger Messages and Update Variables

The two functions that are used to trigger messages and update variables are the Control-T (CRTL-T) and the Control-V (CTRL-V). The CTRL-T function allows for two different ways of displaying messages, priority messaging and add/remove messages. The CTRL-V function is used to update variables on all displays or a specific display.

Priority messaging displays the message number that was just transmitted to the display. Using this function has precedence over any priority levels that are used with add/remove messages. Add/remove messages allows for up to 64 concurrently running messages to be shown on the display. Messages are cleared one at a time or all at once. These messages have priority levels assigned to them that are used to determine how they are displayed.

The CTRL-T Function Frame

The CTRL-T function is used to trigger messages. This function requires an ASCII decimal value to be used to trigger the desired message number. The CTRL-T function has the ability for priority messaging, add a message, or remove a message. Control-T Frame

Format shows the format for the Control-T function and Control-T Frame Description shows the acceptable values.

Control-T Frame Format

			Optional[1]				
Name	[CTRL][T]	MSG#	Backslash	Function	Backslash	Display Address	<CR>

[1] If not used; the message will be shown as a Priority Message on all displays.

When using a function, a display address must be included, even if it is a broadcast address of 255.

Control-T Frame Description

Data	**Acceptable Values**		**Description**
	ASCII	Hex	
[CTRL][T]	^T	\14	Start of Header
MSG #	1 … 4000 (Decimal)	\31 to \34\30\30\30	Message number
	4095 (Decimal)	\34\30\39\35	Background message number
	-1 (Decimal)	\2D\31	
Backlash	\	\5C	Backslash
Function	1 (Decimal) = Priority message 2 (Decimal) = Add message 3 (Decimal) = Remove message	\31 \32 \33	Message function
Backlash	\	\5C	Backslash
Display Address	1 … 255	\31 to \32\35\35	Display address where 255 is a broadcast address.
<CR> or CTRL][M]	^M	\0D	Carriage Return

Use a priority message to clear all concurrently running messages and display the message number just sent. This supersedes any message added to the queue regardless of priority levels assigned to them.

Add/remove messages allows for the ability of up to 64 concurrently running messages to be displayed. Messages are added to the queue and are displayed for the length of time based on the message pause setting (1 to 5 seconds). Messages have three different priority levels assigned to them; low, medium, and high. Messages with the highest priority level in the queue are displayed until they are cleared. When

all messages are removed or cleared, the background message (message # 4095) is displayed.

TIP If no background message is programmed, the default message NO BACKGROUND MESSAGE appears.

The CTRL-V Function Frame - Numeric Variables

The CTRL-V function is used to update variables that are embedded within messages. The value of the variable number determines which variable register is updated in the display. If no display address is used, it updates all displays with the variable data. The Control-V Frame Format shows the format for updating variables and the Control-V Frame Description shows the acceptable values for the CTRL-V function.

Control-V Frame Format

			Optional[1]				
Name	[CTRL][V]	Variable Data	Backslash	Variable #	Backslash	Display address	<CR>

[1] If the Variable # and Display address are not used; only variable 0 on all displays will be updated. If the Variable # is used and not the Display address, that variable number will be updated on all displays.

The following table indicates the values to use in the Control-V format.

Control-V Frame Description

Data	**Acceptable Values**		**Description**
	ASCII	Hex	
[CTRL][V]	^V	\16	Start of Header
Variable Data	-32768 to 32767 (ASCII decimal) [1]	\2D\33\32\37\36\38 to \33\32\37\36\37	Data
Backslash	\	\5C	Backslash
Variable #	0 … 99 (ASCII decimal)	\30 to \39\39	Variable ID number
Backlash	\	\5C	Backslash
Display Address	1 … 255	\31 to \32\35\35	Display address where 255 is a broadcast address.
<CR> or [CTRL][M]	^M	\0D	Carriage Return

[1] To display negative values for a variable, +/- variable format must be selected in the software or sent via protocol (See section InView Display Communication Protocol Functions and Descriptions for further explanation of the InView sign communication protocol being used).

TIP To send floating point numbers, you need to use 2 variables; one for the integer portion, and one for the decimal portion. i.e {var1;}.{var2;}.

The CTRL-V Function Frame - Alphanumeric Variables

The Ctrl-V Function is used to update variables that are embedded within messages. The value of the variable number determines which register to update in the message display. If no variable number is used, only variable 0 is updated. In addition, you can flash or change the color of the variable data.

Control-V Frame Format - Alphanumeric

			Optional[1]				
Name	[CTRL][V]	'Variable Data'	Backslash	Variable #	Backslash	Display address	<CR>

(1) If the Variable # and Display address are not used; only variable 0 on all displays will be updated. If the Variable # is used and not the display address, that variable number will be updated on all displays.

The following table indicates the values to use in the Control-V format.

Control-V Frame Description - Alphanumeric

Data	**Acceptable Values**		**Description**
	ASCII	Hex	
[CTRL][V]	^V	\16	Start of Header
Quote	"	\22	Quote character
Variable Data	Any ASCII character (except "character)	\20 to \126 (except \22)	Data
Quote	"	\22	Quote character
Backslash	\	\5C	Backslash
Variable #	0 … 99 (ASCII decimal)	\30 to \39\39	Variable ID number
Backslash	\	\5C	Backslash
Display Address	1 … 255	\31 to \32\35\35	Display address where 255 is a broadcast address.
<CR>	[CTRL][M] or ^M	\0D	Carriage Return

Flash Variable Data

You can enable/disable flashing for the variable data by using [Ctrl] G1 to turn the variable on and [Ctrl] G0 to turn the variable off.

For example, to flash the word text in the variable data how to flash text, you must enter the variable data as:

how to flash [Ctrl]G[1]text[Ctrl]G[0]

Change Color of Variable Data

To change the color of variable data, you must add the following characters to the variable data for the specific color.

\1C1 for red
\1C2 for green
\1C3 for yellow

For example, the variable data how to show the color is set to display as red. If you want to modify the variable data so the words to change the display as green with the remaining data red, you must set the variable data up as follows:

how \1C2 to change the \1C1 color

Examples of the Control-T Function

There are two basic ways in which messages are displayed: priority messaging or add/remove messages. When using either of these methods, the messages are shown on one or all displays.

Trigger a Message on all Displays using Priority Messaging

A message can be shown on all displays one of three different ways. These examples show the Control-T function being used to show message number 45 on all displays.

Trigger a Message on all Displays

Name	[CTRL][T]	MSG #	Return
ASCII	^T	45	^M
Hex	\14	\34\35	\0D

Or

Name	[CTRL][T]	MSG #	Backslash	Display address	Return
ASCII	^T	45	\	255	^M
Hex	\14	\34\35	\5C	\32\35\35	\0D

Or

Name	[CTRL][T]	MSG #	Backslash	Function	Backslash	Display address	Return
ASCII	^T	45	\	1	\	255	^M
Hex	\14	\34\35	\5C	\31	\5C	\32\35\35	\0D

TIP Allen-Bradley PLC processors requires two backslashes (\\) to be used as a delimiter. Other PLC manufactures may only require one backslash (\).

Trigger a Message on a Specific Display using Priority Messaging

The following are examples of triggering message 39 on display address 031.

Trigger a Message on a Specific Display

Name	[CTRL][T]	MSG #	Backslash	Display address	Return
ASCII	^T	39	\	31	^M
Hex	\14	\33\39	\5C	\33\31	\0D

Or

Name	[CTRL][T]	MSG #	Backslash	Function	Backslash	Display address	Return
ASCII	^T	39	\	1	\	31	^M
Hex	\14	\33\39	\5C	\31	\5C	\33\31	\0D

Add a Message on all Displays

This is an example of how to add message 2011 to all displays.

Add a Message on all Displays

Name	[CTRL][T]	MSG #	Backslash	Function	Backslash	Display address	Return
ASCII	^T	2011	\	2	\	255	^M
Hex	\14	\32\30\31\31	\5C	\32	\5C	\32\35\35	\0D

Adding a Message on a Specific Display

The following adds message 348 to display address 055.

Adding a Message on a Specific Display

Name	[CTRL][T]	MSG #	Backslash	Function	Backslash	Display address	Return
ASCII	^T	348	\	2	\	55	^M
Hex	\14	\33\34\38	\5C	\32	\5C	\35\35	\0D

Remove all Messages on all Displays

The following removes all messages on all displays and automatically displays the background message (4095) without adding the background message number to the message queue.

Name	[CTRL][T]	MSG #	Backslash	Function	Backslash	Display address	Return
ASCII	^T	-1	\	3	\	255	^M
Hex	\14	\2D\31	\5C	\33	\5C	\32\35\35	\0D

The following removes all messages on all displays and add the background message (4095) to the message queue using priority messaging.

Remove a Message on all Displays

Name	[CTRL][T]	MSG #	Return
ASCII	^T	4095	^M
Hex	\14	\34\30\39\35	\0D

Or

Name	[CTRL][T]	MSG #	Backslash	Display address	Return
ASCII	^T	4095	\	255	^M
Hex	\14	\34\30\39\35	\5C	\32\35\35	\0D

Or

Name	[CTRL][T]	MSG #	Backslash	Function	Backslash	Display address	Return
ASCII	^T	4095	\	1	\	255	^M
Hex	\14	\34\30\39\35	\5C	\31	\5C	\32\35\35	\0D

Remove all Messages on a Specific Display

The following removes all currently running messages on a display address 024 and automatically displays the background message (4095) without adding the background message number to the message queue.

Name	[CTRL][T]	MSG #	Backslash	Function	Backslash	Display address	Return
ASCII	^T	-1	\	3	\	24	^M
Hex	\14	\2D\31	\5C	\33	\5C	\32\34	\0D

The following removes all messages on display address 024 and add the background message (4095) to the message queue using priority messaging.

Remove all Messages on a Specific Display

Name	[CTRL][T]	MSG #	Backslash	Display address	Return
ASCII	^T	4095	\	24	^M
Hex	\14	\34\30\39\35	\5C	\32\34	\0D

Or

Name	[CTRL][T]	MSG #	Backslash	Function	Backslash	Display address	Return
ASCII	^T	4095	\	1	\	24	^M
Hex	\14	\34\30\39\35	\5C	\31	\5C	\32\34	\0D

Remove a Message on a Specific Display

The following removes message 367 on a display address 4.

Remove a Message on s Specific Display

Name	[CTRL][T]	MSG #	Backslash	Function	Backslash	Display address	Return
ASCII	^T	367	\	3	\	4	^M
Hex	\14	\33\36\37	\5C	\33	\5C	\34	\0D

Examples of the Control-V Function

This function allows for the updating of variables that are embedded in messages. If no display address is used, it updates all displays with the variable data. The following example updates variable 0 in all displays.

Update a Variable on all Displays

Update variable 0 with the value of 2395 on all displays

Update a Variable on all Displays

Name	[CTRL][V]	Variable Data	Return
ASCII	^V	2395	^M
Hex	\16	\32\33\39\35	\0D

Or

Name	[CTRL][V]	Variable Data	Backslash	Variable #	Return
ASCII	^V	2395	\	0	^M
Hex	\16	\32\33\39\35	\5C	\30	\0D

Or

Name	[CTRL][V]	Variable Data	Backslash	Variable #	Backslash	Display address	Return
ASCII	^V	2395	\	0	\	255	^M
Hex	\16	\32\33\39\35	\5C	\30	\5C	\32\35\35	\0D

Update Variable on a Specific Display

Update variable 5 with the value of 87 on display address 006.

Update a Variable on a Specific Display

Name	[CTRL][V]	Variable Data	Backslash	Variable #	Backslash	Display address	Return
ASCII	^V	87	\	5	\	6	^M
Hex	\16	\38\37	\5C	\35	\5C	\36	\0D

Modbus ASCII Protocol to Download and Preview Messages

Modbus ASCII is an industrial data communications protocol that has been implemented in Allen-Bradley's InView Protocol. It is a master and slave protocol providing for one master and up to 247 slaves. Each slave is assigned a unique address, because only the master can initiate a transaction. The protocol controls the query and response that takes place between master and slave devices as in Figure .

The Modbus ASCII protocol is incorporated into the InView Industrial Protocol that allows displays to connect to a Modbus ASCII communications network. These displays receive applicable Modbus ASCII protocol and limited InView Sign Communication protocol (used during the download and preview of messages). Messages are pre-loaded into the displays, and then triggered by writing Modbus ASCII instructions to specific registers in the display.

Master and Slave Query/Response Cycle

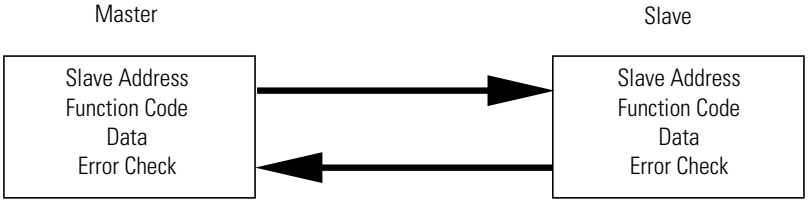

Below are several terms used throughout the Modbus ASCII section.

- ASCII - American Standard Code for Information Interchange.
- LRC - Longitudinal Redundancy Check used for error checking.
- RTU - Remote Terminal Unit.
- Query – Sending information to a node address where a response is expected.
- Response – A response is given to a Query.
- Transmission – Sending information to all node addresses where no response is expected.

How InView Sign Communication Protocol is used with Modbus ASCII Protocol

There are two different modes of transmission used with Modbus protocol, Modbus ASCII and Modbus RTU. In this case, Modbus ASCII is used. Modbus ASCII protocol is used to accomplish such functions as Priority Messaging, Add a Message, Remove a Message, Update Variables, and reading register in the Message Queue or Variable.

The basic framing format that is used in the Modbus ASCII is shown in the section Add a Message on all Displays on page 4-7.

ASCII Message Frame Format

Beg of Frame	Address	Function	Data	Error Check	EOF	Ready to rec. resp
:	2-char 16 bits	2-char 16 bits	N x 4-Char N x 16-Bits	2-char 16 bits	CR	LF

Downloading messages to the displays using Modbus ASCII protocol requires a special function in order to pass Allen-Bradley's InView industrial protocol to the displays. To accomplish this, a Modbus 01 function or frame is specifically used to encapsulate the InView protocol. The downloading of messages that are created using automation software automatically encapsulates the protocol in the Modbus ASCII string.

To encapsulate the InView protocol a Modbus ASCII header and trailer are used. The automation software has message length range from 50 to 450 Bytes. This is only the maximum length of the InView protocol that is encapsulated within the Modbus ASCII protocol. When downloading messages on a Modbus network, the maximum length of the Modbus ASCII and the InView protocol is 500 bytes.

The following table shows the format of the 01 Frame used for the downloading of messages to the displays.

Function 01 Used for Downloading of Messages

Beginning of Frame	Address	Function	Starting Register Lo	Starting Register Hi	Data	Error Check	EOF	Ready to rec. resp
:	2-char 16 bits	2-char 16 bits	2-char 16 bits	2-char 16 bits	InView Protocol	2-char 16 bits	CR	LF

Messages are downloaded to all displays on the Modbus ASCII display network. A broadcast address is used that requires no response from the displays. Modbus ASCII protocol uses address 00h for broadcasting information from one device to the next. This is generally reserved for PLC to PLC communications. For this reason, address 255 (0xff) is used.

Mode of Transmission

Mode of transmission is the format in which messages are transmitted over the network. Characteristics of the Modbus ASCII system are:

Coding Systems - hexadecimal (uses ASCII printable characters: 0-9, A-F).

Modbus allows the format for data transmission.

- Communication rate: user selectable
- Format: Number of bits per character - 1 start bit, 7 data, 1 (optional) parity bit, 1 or 2 stop bits.

For the products, the data communication rate and format shall be 9600 baud (maximum), 1 start bit, 7 data bits, even parity, 2 stop bits.

InView Display Memory Map

Information transmitted to the displays writes or reads information into holding registers. The holding registers used in the products are 40001 to 40167. Holding registers 40001 to 40103 can be written to. Registers 40001 to 40100, and 40103 to 40167 can be read from.

The product has three basic areas for registers, 100 registers for variables, 3 registers for message control, and 64 registers for the message queue. When referencing a holding register, Modbus ASCII requires that 40001 be subtracted from the holding register address.

For example, when using priority messaging, messages are sent to holding register 40103. The register number that is transmitted would be (40103-40001=102) or 102 (0x66) would be transmitted at 100 (64h). The following shows the memory map for the displays.

Memory Map

Modbus Holding Registers	Registers	Description
40001	001	Variables registers Variables 001-100 (00-99 with automation software)
…	…	
40100	100	
40101	101	Add a Message/Downloading of messages
40102	102	Remove a Message
40103	103	Message Queue/Priority Messaging
…	…	
40167	167	

Methods of Transmission

There are eight different methods of transmission of data to and from the display. Each one of these use 1 of 4 different Modbus function codes.

The table, Modbus Function Codes used in InView Products, explains each of the four Modbus ASCII function codes used. The table, Methods of Transportation, shows the eight methods of using these codes with the product.

Modbus Function Codes used in InView Products

Function Code	Function Code Hex	Modbus Meaning	Action.
01	01	Read Coil status	Used to signal the downloading messages to the display.
03	03	Read Output Registers Query	Used to read registers in a display.
06	06	Preset Single Register	Used to preset a single register in a display (Priority Messaging, Update Variables, and Add/Remove a Message).
16	10	Preset Multiple Registers	Used to preset multiple registers in a display (Add/Remove a Message or Update Variables).

Methods of Transportation

Method	Description	Modbus Function code	Display Action
Add/Remove a Message using a Broadcast transmission	Triggers a message(s) on all displays using address 255.	10	Writes information into registers 101 and 102. The display will give no response to transmission.
Add/Remove a Message using a Guaranteed transmission	Triggers a message(s) on a specific display address.	10	Writes information into register 101 and 102. The display will respond to the query.
Priority Messaging using a Broadcast transmission	Triggers a message on all displays using address 255.	06	Write information into register 103. The display will give no response to transmission.
Priority Messaging using a Guaranteed transmission	Triggers a message on a specific display address.	06	Write information into register 103. The display will respond to the query.
Read register data	Request information from a group of registers in the display.	03	Transmit back the information in the registers queried.
Variables Broadcast	Update variables in all displays using address 255.	06 or 10	Update variable registers. The display will give no response to the transmission.
Variable Guaranteed	Update variable in a specific display address.	06 or 10	Update variable registers. The display will respond to the query.
Message Download	Download messages to all display(s) using a specific function code using address 255.	01	Signals the displays that the following data will be InView protocol. The display will give no response to the transmission.

Message Format

Messages are transmitted at 9600 baud, and starts with a beginning of frame : and ends with a carriage return (CR) line feed (LF) to indicate the end of frame. The line feed character also serves as a synchronizing character to indicate that the transmitting station is ready to receive an immediate reply.

The Modbus ASCII message frame format consists of an address field, a function field, a data field, an LRC or error check field, an end of frame field (EOF), and a ready to receive response field (LF). The EOF is a carriage return (0x0d), and the LF is a line feed (0x0a).

ASCII Message Frame Format

Beginning Of Frame	Address	Function	Data	Error Check (LRC)	EOF	LF
:	2 – char 16 – bits	2 – char 16 – bits	N x 4 – char N x 16 – bits	2 – char 16 – bits	0x0d	0x0a

Beginning of Frame Field

Each transmission will start with a : and is used to signal the receiving device that message packet follows.

Address Field

Each slave must be assigned a unique address. When a master sends to a specific slave address (query), the slave sends a response (response) message back to the master. When a master sends a message to a specific display address (001 to 247), the slave will give a response if the message data is correct. All other slaves will ignore the data transmission.

When a master sends a broadcast message addressed of 255 (0xff), then all slaves interpret this as an instruction to read and take action on the message. No response message is required.

Modbus allows 001 through 247 for unique addresses that are used on a network. The products allow for address 001 through 255, with 255 being the broadcast address. Since some networks may not support address 248 through 255, then the broadcast address may not be used, and message queries are always guaranteed. If Modbus message transmissions are being generated from a serial port, then addressing from 001 through 255 are valid.

TIP When a query/response is used for sending messages to the display, the display responds back to the host in less than 10 ms after receiving the Line Feed field (0x0a).

Function Field

The function field tells the address slave what function to perform. There are only four functions that are applicable to the display application.

Data Field

The data field contains information on the specific action that the slave must perform.

Error Check Field

The error checking is the LRC of the message and allows for the master and slave to detect message errors. A response message is only sent, if the original message was received correctly.

The following shows a simulated query and response.

Simulated Query and Response

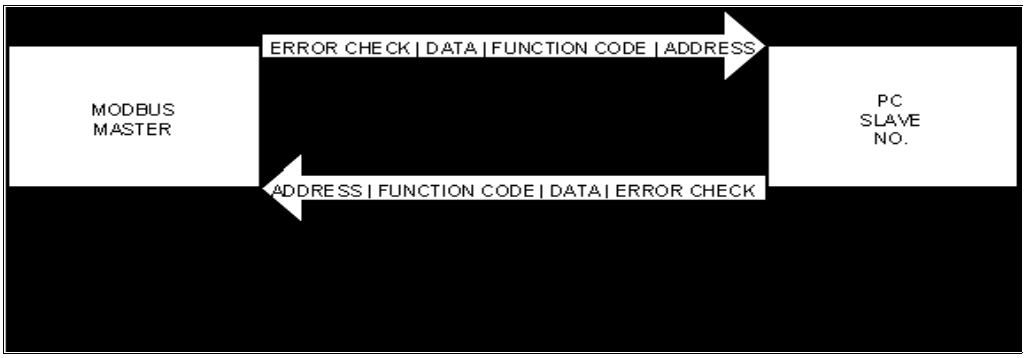

End Of File Field

This field is used to signify the end of file for the transmission. It uses a Carriage Return (0x0d).

Line Feed Field

This is the ready to respond field file (LF) and uses a line feed (0x0a).

Longitudinal Redundancy Check (LRC) Error Detection and Calculation

Some sort of error detection is needed, because communication errors can occur in an industrial environment due to machinery noise and electromagnetic interference. The method for error detection used with Modbus ASCII is Longitudinal Redundancy Check (LRC). The LRC is an 8-bit binary number represented and transmitted as two ASCII Hexadecimal characters. The LRC is produced by adding the message characters (ignoring the carry bit) and taking the two's compliment of

the result. The error check byte is done from the address up to the data field.

The following is an example of how to calculate the LRC in a Modbus ASCII transmission.

Example of LRC Calculations

Beginning of Frame	ADDR	FUNC	H.O. ADDR	L.O. ADDR	DATA	LRC Error	EOF	Ready to rec. resp
	05	06	00	1F	0264	70	CR	LF

Modbus ASCII Transmission

Message	Transmitted Bytes	Binary
Address	05	0000 0101
Function	06	0000 0110
Start Add H.O.	00	0000 0000
Start Add L.O.	1F	0001 1111
Data H.O.	02	0000 0010
Data L.O.	64	0110 0100
Sum	90	1001 0000
1's Complement		0110 1111
+1		+0000 0001
2's Complement		0111 0000
Transmitted as	70	

Examples of Modbus ASCII Functions

The following sections show examples of Modbus ASCII protocol Query/Response transmissions to/from a display for each command instruction listed above. Modbus ASCII will write/read to the holding registers in the display. These registers are in the 40000 range. When writing to register 40101, 40001 is dropped from the address leaving 100 (0x64). The following example shows the transmission of data to holding register 40102 in all displays. The display adds 40001 to the starting address upon receiving the transmission before updating the appropriate holding register.

Example of a Target Holding Register

Beginning of Frame	ADDR	FUNC	H.O. ADDR	L.O. ADDR	DATA	LRC Error	EOF	Ready to rec. resp
:	FF	06	00	65	FFFF	98	CR	LF

Target holding register 40102 – 40001 = 101 (0x65)

Format for the following sections is the use of a query/response or a transmission. Each section shows the complete transmission and response (if applicable). In some examples, there are multiple steps that are needed to complete the function requested. Within these steps, there are pause or delay times that must be used in-between each step.

The data that is sent is ASCII information and the CR and LF represents 0x0d and 0x0a respectively. The beginning of frame (:) represents (0x3a).

Heartbeat Function

The heartbeat function, when enabled, allows the display to determine if it is no longer on the network or if the host device is not functioning properly (not sending data or a heartbeat). Should the display not see any serial activity (valid or invalid) within 3 seconds, an error message No Network Activity is displayed. The heartbeat is either enabled or disabled via protocol or software.

Factory Default: DISABLED.

Enable the Heartbeat Function

The displays are shipped with the heartbeat disabled. Should the heartbeat function be required, the following string of information enables the display to look for a heartbeat or serial activity.

Transmission:

Transmission for Enabling the Heartbeat Function

Beginning of Frame	ADDR	FUNC	H.O. ADDR	L.O. ADDR	DATA	EOF	Ready to rec. resp
:	FF	01	00	64	^AZFF^BE01^D9C	CR	LF

TIP See InView Display Communication Protocol Functions and Descriptions on for further explanation of the InView sign protocol being used.

Response: NONE

Disable the Heartbeat Function

Transmission:

Transmission for Disabling the Heartbeat Function

Beginning of Frame	ADDR	FUNC	H.O. ADDR	L.O. ADDR	DATA	EOF	Ready to rec. resp
:	FF	01	00	64	^AZFF^BE00^D9D	CR	LF

TIP See section InView Display Communication Protocol Functions and Descriptions on for further explanation of the InView sign protocol being used.

Response: NONE

Heartbeat Transmission

The following is the transmission for the heartbeat that is required for the display once the heartbeat function is enabled.

Transmission for the Heartbeat

Beginning of Frame	Data	EOF	Ready to rec. resp
:	00	CR	LF

TIP Recommended interval to be transmitted: once every 500 ms.

Variable data or message data that is being updated in the displays acts as a heartbeat for the No Network Activity error message.

Response: NONE

Clear the Display Memory

This command is used to clear all of the memory (messages) in the displays, resize the memory partitions to 100 bytes (2,000 messages), and load each memory slot with a default message number (for example, Message #0002)

TIP The Clearing Memory string may be required prior to the downloading of messages.

Transmission:

Transmission for Clearing Display Memory

Beginning of Frame	ADDR	FUNC	H.O. ADDR	L.O. ADDR	DATA	EOF	Ready to rec. resp
:	FF	01	00	64	^AZ00^BE$^D	CR	LF

TIP See section InView Display Communication Protocol Functions and Descriptions on for further explanation of the InView sign protocol being used.

Response: NONE

Clear the Message Queue using Modbus ASCII in Broadcast Mode (Recommended)

The display uses a message queue for all currently running messages on the display. This command is used to remove all currently running messages being displayed on all displays. This is also required when switching between priority messages and add/remove messages modes of operation.

Transmission:

Transmission for Clearing the Message Queue with 06 Frame Broadcast

Beginning of Frame	ADDR	FUNC	H.O. ADDR	L.O. ADDR	DATA	LRC Error	EOF	Ready to rec. resp
:	FF	06	00	65	FFFF	98	CR	LF

Response: NONE

Clear the Message Queue using Modbus ASCII in Guaranteed Mode

The following transmission is used to remove all currently running messages on a specific display address. For example, clearing all messages being displayed for display address 001:

Transmission:

Query for Clearing the Message Queue with 06 Frame Guaranteed

Beginning of Frame	ADDR	FUNC	H.O. ADDR	L.O. ADDR	DATA	LRC Error	EOF	Ready to rec. resp
:	01	06	00	65	FFFF	96	CR	LF

Response:

The normal response to a function 06 is to echo (or re-transmit) the query after the holding register is updated.

Response from Clear Queue with a 06 Frame Guaranteed

ADDR	Beginning of Frame	FUNC	H.O. ADDR	L.O. ADDR	DATA	LRC Error	EOF	Ready to rec. resp
:	01	06	00	65	FFFF	96	CR	LF

Set Time in Broadcast Mode with AM/PM Format

The Set Time in Broadcast Mode with 24 Hour Format command is used to set the time and the format for the time in all displays. It is used primarily with the automation software to synchronize the time in the displays with the computer. This requires two separate transmissions. First, set the time and format for the time. Second, clear the queue.

The following is an example of setting the time to 1034 and the format for the time to be AM/PM.

1. Set the time and time format.

Transmission:

Transmission for Setting Time with AM/PM Format

ADDR	Beginning of Frame	FUNC	H.O. ADDR	L.O. ADDR	DATA	EOF	Ready to rec. resp
:	FF	01	00	64	^AZ00^BE 1034^C^BE'S^C^D	CR	LF

TIP See section InView Display Communication Protocol Functions and Descriptions on for further explanation of the InView sign protocol being used.

Response: **NONE**

300 ms pause

2. Clear the message queue.

   This transmission is used to remove the time that was just loaded into the message queue.

Transmission:

Transmission for Clearing the Message Queue

Beginning of Frame	ADDR	FUNC	H.O. ADDR	L.O. ADDR	DATA	LRC Error	EOF	Ready to rec. resp
:	FF	06	00	65	FFFF	98	CR	LF

Response: NONE

Set Time in Broadcast Mode with 24 Hour Format

This command is used to set the time and the format for the time in all displays. This is primarily done using the automation software to synchronize the time in the displays with the computer. This requires two separate transmissions. First, set the time and format for the time. Second, clear the queue. The following is an example of setting the time to 1035 and the format for the time to be 24 hour (military) format.

1. Set the time and time format.

Transmission:

Transmission for Setting Time with 24 Hour Format

ADDR	Beginning of Frame	FUNC	H.O. ADDR	L.O. ADDR	DATA	EOF	Ready to rec. resp
:	FF	01	00	64	^AZ00^BE 1035^C^BE'M^C^D	CR	LF

TIP See section InView Display Communication Protocol Functions and Descriptions on for further explanation of the InView sign protocol being used.

Response: NONE

300 ms pause

2. Clear the message queue.

   This transmission is used to remove time that was just loaded into the message queue.

Transmission:

Transmission for Clearing the Message Queue

Beginning of Frame	ADDR	FUNC	H.O. ADDR	L.O. ADDR	DATA	LRC Error	EOF	Ready to rec. resp
:	FF	06	00	65	FFFF	98	CR	LF

Response: NONE

Set Day and Date in Broadcast Mode

This command is used to set the date in all displays. This is primarily done using the automation software to synchronize the date in the displays with the computer. This requires three separate transmissions. First, set the date. Second, set the day of week. Third, clear the queue. The following is an example of setting the day and date to Thursday, January 4, 2001.

1. Set the date.

Transmission:

Transmission for Setting Date

Beginning of Frame	ADDR	FUNC	H.O. ADDR	L.O. ADDR	DATA	EOF	Ready to rec. resp
:	FF	01	00	64	^AZ00^BE;01040^D	CR	LF

TIP See section InView Display Communication Protocol Functions and Descriptions on for further explanation of the InView sign protocol being used.

Response: **NONE**

300 ms pause

2. Set the day of week.

Transmission:

Transmission for Setting Day of Week

Beginning of Frame	ADDR	FUNC	H.O. ADDR	L.O. ADDR	DATA	EOF	Ready to rec. resp
:	FF	01	00	64	^AZ00^BE&5^D	CR	LF

TIP See section InView Display Communication Protocol Functions and Descriptions on for further explanation of the InView sign protocol being used.

Response: NONE

300 ms pause

3. Clear the message queue.

   This transmission is used to remove date and day of week that was just loaded into the message queue.

Transmission:

Transmission for Clearing the Message Queue

Beginning of Frame	ADDR	FUNC	H.O. ADDR	L.O. ADDR	DATA	LRC Error	EOF	Ready to rec. resp
:	FF	06	00	65	FFFF	98	CR	LF

Response: NONE

Preview a Message

TIP A message preview is not recommended for run-time.

Four separate types of transmissions are required for message preview. This is primarily done using the automation software to preview a message. First, clear the Message Queue. Second, download the message to the appropriate memory partition. Third, trigger the message triggered for viewing. Fourth, generate a heartbeat (if enabled) so that there is some serial network activity allowing the message to be previewed. The software automatically performs these steps.

TIP Message preview causes the loss of data in the memory partition where the message is stored.

This is an example of previewing Message #0001 as a target memory position.

1. Clear the message queue

   This transmission is used to remove all currently running messages on the display for all displays.

Transmission:

Transmission for Clearing the Message Queue

Beginning of Frame	ADDR	FUNC	H.O. ADDR	L.O. ADDR	DATA	LRC Error	EOF	Ready to rec. resp
:	FF	06	00	65	FFFF	98	CR	LF

Response: NONE

300 ms pause

2. Download Message #0001 to the appropriate memory position.

   This stores the message in the message number used within the data field. It overwrites any data already stored in the memory position.

TIP Messages are downloaded to register 101 (40101), which then moves the InView message to the appropriate memory position.

Transmission:

Download Message 1 to be Previewed

Beginning of Frame	ADDR	FUNC	H.O. ADDR	L.O. ADDR	DATA	EOF	Ready to rec. resp
:	FF	01	00	64	^AZ00^BA2001^["b^I^^1^\1Hello^D	CR	LF

TIP See section InView Display Communication Protocol Functions and Descriptions on page 4-41 for further explanation of the InView sign protocol being used.

Response: NONE

300 ms pause

3. Trigger the message that was just downloaded.

Trigger the message that was just downloaded by activating the message number that you want to preview in the message queue.

Transmission:

Trigger Message for Viewing

Beginning of Frame	ADDR	FUNC	H.O. ADDR	L.O. ADDR	DATA	LRC Error	EOF	Ready to rec. resp
:	FF	06	00	66	0001	94	CR	LF

Response: NONE

300 ms pause

4. Generate a heartbeat to view the message that was downloaded (if the Heartbeat function has been enabled).

   Use the heartbeat to provide serial activity so the message may be previewed. Disabling the heartbeat causes the previewed message to turn off after a 3 second internal time-out.

Transmission:

Transmission for Heartbeat

Beginning of Frame	Data	EOF	Ready to rec. resp
:	00	CR	LF

TIP Send the Heartbeat every 500 ms until no longer needed for the previewing of the message.

Response: NONE

500 ms pause between each heartbeat transmission

Download Messages

Messages can be downloaded to the display so that they can be triggered (or activated) at a later time. The download of messages is generally done using the InView messaging software, but can be done

from ladder logic using the instructions below. There are three basic steps that must be done to accomplish this. First, set the memory size. Second, messages are then downloaded. Third, clear the queue.

It may be necessary to clear the memory in the display prior to downloading of messages. This can be done either through a serial transmission from the InView messaging software (2706-PSW1), or ladder logic commands.

Download Three Messages Example

This example shows the display downloading three messages (with three different priority levels). Setting the message size to 200 bytes (0xC8) for each message.

1. Set message partition size in the display(s) to 200 bytes.

Transmission:

Transmission for Setting Message size to 200 Bytes (Example 1)

Beginning of Frame	ADDR	FUNC	H.O. ADDR	L.O. ADDR	DATA	EOF	Ready to rec. resp
:	FF	01	00	64	^AZ00^BEa00C8^D	CR	LF

TIP See section InView Display Communication Protocol Functions and Descriptions on for further explanation of the InView sign protocol being used.

Response: NONE

2000 ms pause

2. Download three messages.

   This step is accomplished with three separate transmissions to the display, one for each message.

TIP The total number of bytes for each transmission (from the Beg of Frame to Ready to rec. resp.) must not exceed 500 bytes.

Download message file #0001

Transmission:

Transmission for Downloading Message 1 (Example 1)

Beginning of Frame	ADDR	FUNC	H.O. ADDR	L.O. ADDR	DATA	EOF	Ready to rec. resp
:	FF	01	00	64	^AZ00^BA2001^["b^I^^1^\1Priority High^D	CR	LF

TIP See section InView Display Communication Protocol Functions and Descriptions on for further explanation of the InView sign protocol being used.

Response: NONE

300 ms pause

Download message to file #0002

Transmission:

Transmission for Downloading Message 2 (Example 1)

Beginning of Frame	ADDR	FUNC	H.O. ADDR	L.O. ADDR	DATA	EOF	Ready to rec. resp
:	FF	01	00	64	^AZ00^BA1002^["b^I^^1^\1Priority Medium^D	CR	LF

TIP See section InView Display Communication Protocol Functions and Descriptions on for further explanation of the InView sign protocol being used.

Response: NONE

300 ms pause

Download message to file #0003

Transmission:

Transmission for Downloading Message 3 (Example 1)

Beginning of Frame	ADDR	FUNC	H.O. ADDR	L.O. ADDR	DATA	EOF	Ready to rec. resp
:	FF	01	00	64	^AZ00^BA0003^["b^I^^1^\1Priority Low^D	CR	LF

TIP See section InView Display Communication Protocol Functions and Descriptions on page 4-41 for further explanation of the InView sign protocol being used.

Response: NONE

300 ms pause

1. Clear the message queue.

   This transmission is used to remove all currently running messages downloaded to the message queue.

Transmission:

Transmission for Clearing the Message Queue

Beginning of Frame	ADDR	FUNC	H.O. ADDR	L.O. ADDR	DATA	LRC Error	EOF	Ready to rec. resp
:	FF	06	00	65	FFFF	98	CR	LF

Response: NONE

Download Two Messages with a Variable Example

This example shows downloading two messages (one with a variable). Setting the message size to 60 bytes (0x3C) for each message.

1. Set message partitions in the display(s) to 60 bytes.

Transmission:

Transmission for Setting Message Size to 60 Bytes (Example 2)

Beginning of Frame	ADDR	FUNC	H.O. ADDR	L.O. ADDR	DATA	EOF	Ready to rec. resp
:	FF	01	00	64	^AZ00^BEa003C^D	CR	LF

TIP See section InView Display Communication Protocol Functions and Descriptions on for further explanation of the InView sign protocol being used.

Response: NONE

2000 ms pause

2. Download two messages.

This step is accomplished with two separate transmissions to the display, one for each message.

TIP The total number of bytes for each transmission (from the beginning of frame to ready to rec. resp.) must not exceed 500 bytes.

Download message file #0001

Transmission:

Transmission for Downloading Message 1 (Example 2)

Beginning of Frame	ADDR	FUNC	H.O. ADDR	L.O. ADDR	DATA	EOF	Ready to rec. resp
:	FF	01	00	64	^AZ00^BA2001^["b^I^^1^\1Hello^D	CR	LF

TIP See section InView Display Communication Protocol Functions and Descriptions on for further explanation of the InView sign protocol being used.

Response: NONE

300 ms pause

Download message to file #0002

Transmission:

Transmission for Downloading Message 2 (Example 2)

Beginning of Frame	ADDR	FUNC	H.O. ADDR	L.O. ADDR	DATA	EOF	Ready to rec. resp
:	FF	01	00	64	^AZ00^BA1002^[b^I^^1^\2Part count = ^]A0^]B0^P00^D	CR	LF

TIP See section InView Display Communication Protocol Functions and Descriptions on for further explanation of the InView sign protocol being used.

Response: NONE

300 ms pause

3. Clear the message queue.

   This transmission is used to remove all currently running messages downloaded to the message queue.

Transmission:

Transmission for Clearing the Message Queue

Beginning of Frame	ADDR	FUNC	H.O. ADDR	L.O. ADDR	DATA	LRC Error	EOF	Ready to rec. resp
:	FF	06	00	65	FFFF	98	CR	LF

Response: NONE

Add/Remove a Message using a Modbus ASCII 10 Frame Query (Recommended)

This method uses both registers 40101 and 40102 in the display to add and remove a message from the message queue respectively. By using the Guaranteed mode, only the display that is addressed on the network accepts and processes the information it receives. The following is an example of adding message #0015 and removing message #0045 from the message queue on display number 019.

Transmission:

Query for Add/Remove a Message

Beginning of Frame	ADDR	FUNC	H.O. ADDR	L.O. ADDR	QUANTITY	BYTE CNT	DATA	
:	13	10	00	64	0002	04	000F	002D

LRC Error	EOF	Ready to rec. resp
37	CR	LF

Response:

The normal response to a function 10 is to echo the address, function code, starting address and the number of registers that were loaded.

Response for Add/Remove a Message

Beginning of Frame	ADDR	FUNC	H.O. ADDR	L.O. ADDR	QUANTITY	LRC Error	EOF	Ready to rec. resp
:	13	10	00	64	0002	77	CR	LF

Add/Remove a Message using Modbus ASCII 10 Frame Transmission

This method uses both registers 40101 and 40102 in the display to activate and de-activate messages respectively. By using the Broadcast mode, all displays on the network will accept and process the

information received. The following is an example of adding message #0003 and removing message #0002 from the message queue.

Transmission:

Transmission for Add/Remove a Message

Beginning of Frame	ADDR	FUNC	H.O. ADDR	L.O. ADDR	QUANTITY	BYTE CNT	DATA	
:	FF	10	00	64	0002	04	0003	0002

LRC Error	EOF	Ready to rec. resp
7E	CR	LF

Response: NONE

Priority Messaging using a Modbus ASCII Query (Recommended)

This method writes to the first register in the message queue (40103). When this happens, the previous message in the queue is replaced with the new message to be loaded.

This is an example of sending a Priority Message #0099 to display address 001.

Transmission:

Query for a Priority Message

Beginning of Frame	ADDR	FUNC	H.O. ADDR	L.O. ADDR	DATA	LRC Error	EOF	Ready to rec. resp
:	01	06	00	66	0063	30	CR	LF

Response:

The normal response to a function 06 is to echo (or re-transmit) the query after the holding register is updated.

Response for a Priority Message

Beginning of Frame	ADDR	FUNC	H.O. ADDR	L.O. ADDR	DATA	LRC Error	EOF	Ready to rec. resp
:	01	06	00	66	0063	30	CR	LF

Priority Messaging using a Modbus ASCII Transmission

This method writes to the first register in the message queue (40103). When this happens, the previous message in the queue is replaced with the new message to be activated. This is an example sending a Priority Message #0800 to all displays that are on the network.

Transmission:

Transmission for Priority Messaging

Beginning of Frame	ADDR	FUNC	H.O. ADDR	L.O. ADDR	DATA	LRC Error	EOF	Ready to rec. resp
:	FF	06	00	66	0320	72	CR	LF

Response: NONE

Update a Variable using a Modbus ASCII 06 Frame in Broadcast Mode (Recommended)

This method writes (or loads) variable data to the appropriate variable registers in all displays. The following is an example of loading variable 20 (register 40020) with the value of 3656 for all displays on the network.

Transmission:

Transmission to Update a Variable Register with 06 Frame Broadcast

Beginning of Frame	ADDR	FUNC	H.O. ADDR	L.O. ADDR	DATA	LRC Error	EOF	Ready to rec. resp
:	FF	06	00	13	0E48	92	CR	LF

Response: NONE

Update a Variable using a Modbus ASCII 06 Frame in Guaranteed Mode

This method writes (or loads) variable data to the appropriate variable register in a specific display. The following is an example of loading variable 32 (register 40032) with the value 612 in display address 005.

Transmission:

Query for Updating a Variable Register

Beginning of Frame	ADDR	FUNC	H.O. ADDR	L.O. ADDR	DATA	LRC Error	EOF	Ready to rec. resp
:	05	06	00	1F	0264	70	CR	LF

Response:

The normal response to a function 06 is to echo (or re-transmit) the query after the holding register is updated.

Response for Updating a Variable Register

Beginning of Frame	ADDR	FUNC	H.O. ADDR	L.O. ADDR	DATA	LRC Error	EOF	Ready to rec. resp
:	05	06	00	1F	0264	70	CR	LF

TIP Use of the Guaranteed mode for variable updates may slow down variable updates due to the response transmission.

Update Variables using a Modbus ASCII 10 frame in Broadcast mode (Recommended)

This method allows the ability to update more than one variable register in all displays. A maximum of 60 registers can be updated in one transmission.

The following example shows how to update variables 1, 2, and 3 (registers 40001, 40002, and 40003) with values 24, 53, and 56 respectively in all displays.

Transmission:

Transmission for Updating Variable Registers with 10 Frame Broadcast

Beginning of Frame	ADDR	FUNC	H.O. ADDR	L.O. ADDR	QUANTITY	BYTE CNT	DATA		
:	FF	10	00	00	0003	06	0018	0035	0038

LRC Error	EOF	Ready to rec. resp
63	CR	LF

Response: NONE

Update Variables using a Modbus ASCII 10 frame in Guaranteed mode

This method allows the ability to update more than one variable in a specific display address. A maximum of 60 registers can be updated in one transmission. Unused high order bits must be set to zero. The following is an example of updating variables 1, 2, and 3 with values 23, 734, and 7 respectively in display address 003.

Below is an example of a preset multiple register transmission.

Transmission:

Query for Updating Variable Registers using a 10 Frame

Beginning of Frame	ADDR	FUNC	H.O. ADDR	L.O. ADDR	QUANTITY	BYTE CNT	DATA		
:	03	10	00	00	0003	06	0017	02DE	0007

LRC Error	EOF	Ready to rec. resp
E6	CR	LF

TIP Use of the Guaranteed mode for variable updates, messages may not be displayed as expected.

Response:

The normal response to a function 10 query is to echo the address, function code, starting address and the number of registers that were loaded.

Response for Updating Variable Registers using a 10 Frame

Beginning of Frame	ADDR	FUNC	H.O. ADDR	L.O. ADDR	QUANTITY	LRC Error	EOF	Ready to rec. resp
:	03	10	00	00	0003	EA	CR	LF

Read the Message Queue using a Modbus ASCII 03 frame

This function allows the ability to read message numbers that are currently running in the message queue on a display. A maximum of 64 registers can be read since there is a maximum of 64 registers (or concurrently running messages) in the message queue. The following is an example of request for the first 3 registers in the message queue (Registers 40103 through 40105) which contain message data values 4, 6, and 11 respectively in display address 010.

Transmission:

Query for Requesting Message Queue Data

Beginning of Frame	ADDR	FUNC	H.O. ADDR	L.O. ADDR	DATA Number of register to read	LRC Error	EOF	Ready to rec. resp
:	0A	03	00	66	0003	8A	CR	LF

Response:

The addressed slave responds with its address and the function code, followed by the information field. The information field contains 2 bytes describing the quantity of data bytes to be returned. The contents of the registers requested (DATA) are two bytes each, with the binary content right justified within each pair of characters.

The normal response to a function 03 query is to echo the address, function code, starting address and the data for the registers that were requested.

Response for Requesting Message Queue Data

Beginning of Frame	ADDR	FUNC	BYTE COUNT	DATA OUTPUT REG H.O. 0066	DATA OUTPUT REG L.O. 0066	DATA OUTPUT REG H.O. 0067	DATA OUTPUT REG L.O. 0067
:	0A	03	06	00	04	00	06

DATA OUTPUT REG H.O. 0068	DATA OUTPUT REG L.O. 0068	LRC	EOF	Ready to rec. resp
00	0B	D8	CR	LF

Read Variables in a Display using a Modbus ASCII 03 frame

This function allows the ability to read variable data stored in a display. A maximum of 100 registers can be read since there is a maximum of 100 registers of data. Below is an example of the request for registers 40002 through 40004 in display address 020.

Transmission:

Query for Requesting Variable Data

Beginning of Frame	ADDR	FUNC	H.O. ADDR	L.O. ADDR	DATA Number of register to read	LRC Error	EOF	Ready to rec. resp
:	14	03	00	01	0003	E5	CR	LF

Response:

The addressed slave responds with its address and the function code, followed by the information field. The information field contains 2 bytes describing the quantity of data bytes to be returned. The contents of the registers requested (DATA) are two bytes each, with the binary content right justified within each pair of characters. Below shows the response to query for registers 40002 through 40004 having the decimal contents of 44, 63, and 1 respectively.

The normal response to a function 03 query is to echo the address, function code, starting address and the data for the registers that were requested.

Response for Requesting Variable Data

Beginning of Frame	ADDR	FUNC	BYTE COUNT	DATA OUTPUT REG H.O. 0002	DATA OUTPUT REG L.O. 0002	DATA OUTPUT REG H.O. 0003	DATA OUTPUT REG L.O. 0003
:	14	03	06	00	2C	00	3F

DATA OUTPUT REG H.O. 0004	DATA OUTPUT REG L.O. 0004	LRC	EOF	Ready to rec. resp
00	01	77	CR	LF

Change the InView Display Address

This function allows the ability to change the serial address in a display. For example change display address 001 to address 020. When doing this, you need to know the address of the display you want to change. This is typically done using the automation software.

The following is an example of changing a display (with the address of 005) to address 004.

Transmission:

Transmission for Changing the Serial Address

Beg of Frame	ADDR	FUNC	H.O. ADDR	L.O. ADDR	DATA	EOF	Ready to rec. resp
:	05	01	00	64	^AZ05^BE704^D	CR	LF

TIP See section InView Display Communication Protocol Functions and Descriptions on for further explanation of the InView sign protocol being used.

Response: NONE

InView Display Communication Protocol Functions and Descriptions

The InView display communication protocol that is used in conjunction with the Modbus ASCII protocol is mostly limited due to the number of functions and features that required by the InView products. This Protocol can be used for downloading new messages of alpha numeric messages from an Allen-Bradley controller.

InView Message Format used within Modbus ASCII Protocol

Information that is used within the InView message is formatted differently than that of the standard protocol. The following table shows the basic message structure with a brief explanation of each part.

Basic InView Message Format

<SOH>	Type Code	Display Address	<STX>	Command Code	Message Control	Message Attributes	Insert Objects	Insert Variables	Message Data	<EOT>

Name	Description
<SOH>	Start of Header
Type Code	What display type to communicate with.
Display Address	Address of display where information is written.
<STX>	Start of Text
Command Code	Describes what type function to perform, Message priority, and Message number.
Message Control	Describes the How the message is displayed, such as Position, Mode, Pause, and Justification.
Message Attributes	Describes any Font, Color, Width/Height, and Flash.
Insert Objects	Describes any special items that are inserted within a message such as Time, Date, and Extended Character set.
Insert Variables	Describes Variable number and formatting.
Message Data	Data for the Message itself
<EOT>	End of Transmission

Items in Bold must be used in each transmission. The automation software will automatically put this information into the message that is transmitted. Some of these functions are modified from the InView protocol that is used in the standard product line, for example, message number versus file labels. Below is a list of the valid values

for each of the fields shown above. Each of these are concatenated together to make up the InView message.

InView Message Format

<SOH>			Type Code			Display Address		
Description	**ASCII**	**Hex**	**Description**	**ASCII**	**Hex**	**Description**	**ASCII**	**Hex**
Start of Header	^A	01	All displays	Z	5A	Display Address	00	3030

InView Message Format Continued

<STX>			Command Code					
			Command			Priority		
Description	**ASCII**	**Hex**	**Description**	**ASCII**	**Hex**	**Description**	**ASCII**	**Hex**
Start of Text	^B	02	Write Text file	A	41	Low	0	30
			Write Special Function	E[1]	45	Medium	1	31
						High	2	32

[1] Refer to Trigger a Message on a Specific Display using Priority Messaging on page 6 for further explanation of the Special Function command

InView Message Format Continued

Command Code (Continued)			Message Control					
Message #			<ESC>			Display Position		
Description	**ASCII**	**Hex**	**Description**	**ASCII**	**Hex**	**Description**	**ASCII**	**Hex**
0001	001	303031	Start of Mode Field	^[	1B	Middle	(space)	20
Through						Top	“	22
4000	FA0	464130				Bottom	&	26
4095	FFF	464646				Fill	0	30

InView Message Format Continued

Mode			Speed			Justification		
Description	**ASCII**	**Hex**	**Description**	**ASCII**	**Hex**	**Description**	**ASCII**	**Hex**
Rotate left	a	61	(No Hold)	^I	09	Left	^^1	1E31
Hold	b	62	(1 Sec.)	^U	15	Center	^^0	1E30
			(2 Sec.)	^V	16			
			(3 Sec.)	^W	17			
			(4 Sec.)	^X	18			
			(5 Sec.)	^Y	19			

InView Message Format Continued

Message Attributes								
Character Font			**Character Color**			**Character Width/Height**		
Description	**ASCII**	**Hex**	**Description**	**ASCII**	**Hex**	**Description**	**ASCII**	**Hex**
5 High Standard	^Z1	1A31	Red	^\1	1C31	Standard	^Q^]10	111D3130
7 High Standard	^Z3	1A33	Green	^\2	1C32	Wide	^R^]10	121D3130
7 High Fancy	^Z5	1A35	Yellow	^\3	1C33	Dble Wide	^Q^]11	111D3131
10 High Standard	^Z6	1A36				Double High	^Q^]21	111D3231
16 High Fancy (Full Height)	^Z8	1A38						
16 High Standard (Full Height)	^Z9	1A39						
24/32 Fancy	^Z8^E1	1A3805 31						
24/32 High	^Z9^E1	1A3905 31						

InView Message Format Continued

Message Attributes (Continued)			Insert Objects					
Character Flash			**Time**			**Date**		
Description	**ASCII**	**Hex**	**Descriptio n**	**ASCII**	**Hex**	**Description**	**ASCII**	**Hex**
Flash ON	^G1	0731	Time	^S	13	MM/DD/YY	^K0	0B30
Flash OFF	^G0	0730				DD/MM/YY	^K1	0B31
						MM-DD-YY	^K2	0B32
						DD-MM-YY	^K3	0B33
						MM.DD.YY	^K4	0B34

InView Message Format Continued

Message Attributes (Continued)			Insert Objects					
						DD.MM.YY	^K5	0B35
						MM DD YY	^K6	0B36
						DD MM YY	^K7	0B37
						MMM.DD YYYY	^K8	0B38

InView Message Format Continued

Insert Object (Continued)			Insert Variable - Numeric		
Miscellaneous			**Variable Format**		
Description	**ASCII**	**Hex**	**Description**	**ASCII**	**Hex**
See Appendix A			No Padding, XX	^]A0^]B0	1D41301D4230
			Leading 0, 000XX	^]A1^]B0	1D41311D4230
			Leading Space, ___XX	^]A2^]B0	1D41321D4230
			_+/- No Padding, +/- XX	^]A0^]B1	1D41301D4231
			+/- leading 0, +/- 000XX	^]A1^]B1	1D41311D4231
			+/- Leading Space, +/-, ___XX	^]A2^]B1	1D41321D4231

InView Message Format Continued

Insert Variable - Numeric			Message Field			<EOT>		
Call Variable			**Message or Data**					
Description	**ASCII**	**Hex**	**Description**	**ASCII**	**Hex**	**Description**	**ASCII**	**Hex**
Variable 1	^P00	103030	ASCII Data	(space) - DEL	20-7F	End of Transmission	^D	04
Variable 2	^P01	103031						
…	…	…						
Variable 99	^P62	103632						
Variable 100	^P63	103633						

InView Message Format Continued

Insert Variable - Alphanumeric					
Variable Format			**Call Variable**		
Description	**ASCII**	**HEX**	**Description**	**ASCII**	**HEX**
Alpha Length 1	^]A301	1D41333031	Variable 1	^PA00	10413030
....			....		
Alpha Length 128	^]A380	1D41333830	Variable 100	^PA63	10413633

InView Message Format Continued

Insert Bitmaps		
Bitmaps		
Description	ASCII	HEX
Bitmap 0	^N0000	0E30303030
....		
Bitmap 2047	^N07FF	0E30374646

InView Message Format Continued

<EOT>		
Description	**ASCII**	**Hex**
End of Transmission	^D	04

Special Function Command

The Special Function Command is used to; Clear the Display Memory, Set Message Size, Set Time and Date, Read Memory from a display on the network, and set the serial address.

The following tables show the valid information to perform each on the commands

Clear the Display Memory

Special Function command to Clear Display Memory

<SOH>			Type Code			Display Address		
Description	**ASCII**	**Hex**	**Description**	**ASCII**	**Hex**	**Description**	**ASCII**	**Hex**
Start of Header	^A	01	All displays	Z	5A	Display Address	00	3030

Special Function command to Clear Display Memory

<STX>			Command Code					
			Command			**Function**		
Description	**ASCII**	**Hex**	**Description**	**ASCII**	**Hex**	**Description**	**ASCII**	**Hex**
Start of Text	^B	02	Write Special Function	E	45	Clear Memory	$	24

Special Function command to Clear Display Memory

<EOT>		
Description	**ASCII**	**Hex**
End of Transmission	^D	04

Set Message Size

The message size is the number of bytes that each message can be stored in. This message size will partition the displays memory based on the number of bytes used in the message size. When this command is used, it (generally, based on model of display) takes 200,000 bytes and divides it by the number of bytes used for the message size. For example, 2,000 message partitions would be available if the message size was set to 100 bytes (200,000 bytes/100 bytes/message = 2,000 messages).

The number of bytes used in each message is the number of bytes used from the <SOH> to the <EOT> inclusive. Therefore, care must be used to insure that the number of bytes sent does not exceed the Message Size. The range for the message size is 50 bytes to 450 bytes. The following is the message data used to set the message size.

Special Function Command to Set Memory Size

<SOH>			Type Code			Display Address		
Description	**ASCII**	**Hex**	**Description**	**ASCII**	**Hex**	**Description**	**ASCII**	**Hex**
Start of Header	^A	01	All displays	Z	5A	Display Address	00	3030

Special Function Command to Set Memory Size Continued

<STX>			Command Code					
			Command			Function		
Description	**ASCII**	**Hex**	**Description**	**ASCII**	**Hex**	**Description**	**ASCII**	**Hex**
Start of Text	^B	02	Write Special Function	E	45	Set Message Size	a	61

Special Function Command to Set Memory Size Continued

Command Code (Continued)			<EOT>		
Description	**ASCII**	**Hex**	**Description**	**ASCII**	**Hex**
Message Size (minimum) 50 Bytes	0032	30303332	End of Transmission	^D	04
Message Size (maximum) 450 Bytes	01C2	30314332			

Set Time

Time can be set in either AM/PM format or 24 hour (military) format. The following shows the valid values for this command

Special Function Command to Set Time and Time Format

<SOH>			Type Code			Display Address		
Description	**ASCII**	**Hex**	**Description**	**ASCII**	**Hex**	**Description**	**ASCII**	**Hex**
Start of Header	^A	01	All displays	Z	5A	Display Address	00	3030

Special Function Command to Set Time and Time Format Continue

<STX>			Command Code					
			Command			Function		
Description	**ASCII**	**Hex**	**Description**	**ASCII**	**Hex**	**Description**	**ASCII**	**Hex**
Start of Text	^B	02	Write Special Function	E	45	Set Time	(Sp)	20

Special Function Command to Set Time and Time Format Continued

Command Code (Continued)			<ETX		
Set Time					
Set Hour and Minutes HhMm	ASCII	Hex	Description	ASCII	Hex
HhMm 1034 (Example)	1034	31303334	End of Text	^C	03
HhMm 0945 (Example)	0945	30393435			
H = ASCII digit for hours (10's digit)					
h = ASCII digit for hours (1's digit)					
M = ASCII digit for Minutes (10's digit)					
m = ASCII digit for Minutes (1's digit)					

Special Function Command to Set Time and Time Format Continued

<STX>			Command Code			<ETX		
Description	**ASCII**	**Hex**	**Description**	**ASCII**	**Hex**	**Description**	**ASCII**	**Hex**
Start of Text	^B	42	Set Time Format AM/PM	'S	2753	End of Text	^C	03
			Set Time Format 24Hr (Military)	'M	274D			

Special Function Command to Set Time and Time Format Continued

<EOT>		
Description	**ASCII**	**Hex**
End of Transmission	^D	04

Set Date

This command is used to set the date.

Format for displaying the date is shown under insert object on page 4-35.

Special Function command to set Time and Date

<SOH>			Type Code			Display Address		
Description	**ASCII**	**Hex**	**Description**	**ASCII**	**Hex**	**Description**	**ASCII**	**Hex**
Start of Header	^A	01	All displays	Z	5A	Display Address	00	3030

Special Function command to set Time and Date Continued

<STX>			Command Code					
			Command			Function		
Description	**ASCII**	**Hex**	**Description**	**ASCII**	**Hex**	**Description**	**ASCII**	**Hex**
Start of Text	^B	02	Write Special Function	E	45	Set Date	;	

Special Function command to set Time and Date Continued

Command Code (Continued)			<ETX		
Set Date					
Set Hour and Minutes HhMm	**ASCII**	**Hex**	**Description**	**ASCII**	**Hex**
January 4, 2001 (Example)	010401	303130343031	End of Text	^C	03
December 5, 2002 (Example)	120502	313230353032			

Special Function command to set Time and Date Continued

<STX>			Command Code			<ETX		
Description	**ASCII**	**Hex**	**Description**	**ASCII**	**Hex**	**Description**	**ASCII**	**Hex**
Start of Text	^B	42	Set Time Format AM/PM	‘S	2753	End of Text	^C	03
			Set Time Format 24Hr (Military)	‘M	274D			

Special Function command to set Time and Date Continued

<EOT>		
Description	**ASCII**	**Hex**
End of Transmission	^D	04

Set Day of Week

This command sets the day of week once the date is set.

Special Function command to set Day of Week

<SOH>			Type Code			Display Address		
Description	**ASCII**	**Hex**	**Description**	**ASCII**	**Hex**	**Description**	**ASCII**	**Hex**
Start of Header	^A	01	All displays	Z	5A	Display Address	00	3030

Special Function command to set Day of Week Continued

<STX>			Command Code					
			Command			Function		
Description	**ASCII**	**Hex**	**Description**	**ASCII**	**Hex**	**Description**	**ASCII**	**Hex**
Start of Text	^B	02	Write Special Function	E	45	Set Date	&	26

Special Function command to set Day of Week Continued

Command Code (Continued)			<EOT>		
Set Day of Week	**ASCII**	**Hex**	**Description**	**ASCII**	**Hex**
Sunday	1	31	End of Transmission	^D	04
Monday	2	32			
Tuesday	3	33			
Wednesday	4	34			
Thursday	5	35			
Friday	6	36			
Saturday	7	37			

Set Serial Address

This command will change a serial address for a display.

Special Function Command to Set Serial Address

<SOH>			Type Code			Display Address		
Description	**ASCII**	**Hex**	**Description**	**ASCII**	**Hex**	**Description**	**ASCII**	**Hex**
Start of Header	^A	01	All displays	Z	5A	Display Address	01-FF	3031-4646

Special Function Command to Set Serial Address Continued

<STX>			Command Code					
			Command			Function		
Description	**ASCII**	**Hex**	**Description**	**ASCII**	**Hex**	**Description**	**ASCII**	**Hex**
Start of Text	^B	02	Write Special Function	E	45	Set address	7	37

Special Function Command to Set Serial Address Continued

Command Code (Continued)			<EOT>		
Serial address	**ASCII**	**Hex**	**Description**	**ASCII**	**Hex**
New serial address	01-FE	3031-4645	End of Transmission	^D	04

Text Position Placement

Allen-Bradley uses the 2706-P42, 2706-P44, and 2706-P72 series displays with InView industrial protocol. The displays can be single line, two-line or 3-line. Displaying of messages using protocol is slightly different based on which display is being used.

Below are some rules for the 2706-P44 and 2706-P72 display. The 2706-P42 display ignores the display position and show (display) the text.

Valid Modes Used in P44 Series Displays

P44 Series	
Display Position	Description
Top	Displays text on top line only.
Bottom	Displays text on the bottom line only.
Middle	Used to display full height text (Fancy 16 Pixel or 16 Pixel).
Fill	Displays two lines of 7 pixel characters.

Valid Modes Used in P72 Series Displays

P72 Series			
Display Position	Description	Comment 1	Comment 2
Top	Displays text on top line only.	If the top line only has one row of text, the remaining bottom rows are considered bottom.	If the top line only has two rows of text, the remaining bottom row is considered bottom.
Bottom	Displays text on the bottom line only.	If the bottom line only has one row of text, the remaining top rows are considered top.	If the bottom line has two rows of text, the remaining top row is considered top.
Middle	Not used	Not used	Not used
Fill	Displays full screen of text.	Can be used to display Fancy 16 Pixel or 16 Pixel characters.	

ASCII Characters

You can enter extended ASCII characters directly within the text of a message. Some of the characters may not show up depending on the fonts on your PC. Please refer to the software help, 2706-PSW1, for a complete listing of the extended ASCII character set.

TIP You must preview your message to view the extended characters when using the InView Messaging Software.

Reference Material

For additional information refer to, Modicon Modbus Protocol Reference Guide, PI-MBUS-300 Rev C.

InView Control and InView Control API

Introduction

The purpose of this chapter is to describe the API for the InView control. The chapter is divided into two sections. The first section is a quick overview on how to use the control. It highlights the basic steps needed to get the control up and running. The second section is a detailed reference of the properties and methods available in the control. Each property and method is listed in a table with a brief description and a link to a more complete description.

Quick Overview

The InView control is designed primarily for use with the InView messaging software. The InView messaging software is used to create and download messages to the display, and the InView control is used to trigger the messages and update variables within those messages. Assuming that the InView messaging software has already been used to load the display with messages, there are five basic steps to using the control to trigger a message:

1. Add the control to your project. It appears as InView control under Project|Components… in Visual Basic.
2. Call the Initialize method to open a connection to the display.
3. Set the heartbeat property to 2 to disable the display's heartbeat requirement.
4. Call the AddMessage method to trigger a message on the display.
5. Call the UpdateVariable method to change the value of a variable.

Following is a snapshot of a Visual Basic form and its associated code that illustrates these five steps. This code assumes that the display contains a message in slot number 1, and that the message contains variable 0 within its body. It also uses the controls default communications settings of serial on COM1 to connect with the display.

```
Private Sub Command1_Click()
```

```
        InViewCtrl1.UpdateVariable 0, Text1.Text   'Update variable 0
        with
    End Sub                                        'number in edit box
    Private Sub Form_Load()
        InViewCtrl1.Initialize          'Open COM1
        InViewCtrl1.Heartbeat = 2       'Disable heartbeat
        InViewCtrl1.AddMessage 1        'Trigger message #1
    End Sub
```

Reference

- Name: InView Control
- ProgId: Invwctrl.InView
- Interface: InViewCtrl SupportErrorInfo

Properties

InViewCtrl Properties	Description
ConnectMode	Sets/Returns method by which the control communicates with the display.
NetworkAddress	Sets/Returns IP address used to communicate with the display.
NetworkPort	Sets/Returns socket port used to communicate with the display.
SerialComPort	Sets/Returns serial port used to communicate with the display.
SerialBaudRate	Sets/Returns serial baud rate used to communicate with the display.
SerialParity	Sets/Returns serial parity used to communicate with the display.
SerialDataBits	Sets/Returns serial data bits used to communicate with the display.
SerialStopBits	Sets/Returns serial stop bits used to communicate with the display.
DisplayAddress	Sets/Returns the address being used to communicate with the display.
PartitionSize	Sets/Returns the maximum size (in bytes) per message in the display.
Heartbeat	Sets/Returns the use of a heartbeat while communicating with the display.

Methods

InViewCtrl Methods	Description
Initialize	Establishes or re-establish a connection with the display.
Close	Terminates a connection with the display.
Partition	Configures the maximum size per message (and number of messages) in the display.
ClearMessageQueue	Turns off any messages running on the display.
ClearMemory	Clears all memory in the display and reset the display.
DownloadMessage	Downloads a simple message to the display.
DownloadMessageEx	Downloads any type of message to the display (Advanced Use Only).
AddMessage	Starts a previously downloaded message running on the display.
RemoveMessage	Stops a message from running on the display.
SingleMessage	Stops any currently running messages on the display and run a single previously downloaded message.
UpdateVariable	Updates the value of a single variable.
UpdateVariableEx	Updates the values of a range of variables.
SetTime	Sets the time stored in the display.
SetDate	Sets the date stored in the display.
ChangeDisplayAddress	Changes the address of the display.
ChangeDisplayBaudRate	Changes the display's communication rate.
ChangeDisplayIPAddress	Changes the display's IPAddress (part of the TCP/IP protocol).
ChangeDisplaySubnetMask	Changes the display's subnet mask (part of the TCP/IP protocol).
ChangeDisplayGateway	Changes the display's gateway (part of the TCP/IP protocol).
ClearBitmapTable	Clears the contents of the display's bitmap table.
DownloadBitmaps	Downloads a range of bitmaps to the display's sbitmap table.

Properties

Properties

InViewCtrl Properties	Properties	Description
ConnectMode	Syntax	object.ConnectMode = value Read/Write (short)
	Values	0 - Serial Communication 1 - TCP/IP Communication
	Default	0
	Description	This property is used to set the method by which the control communicates with the display

Properties

InViewCtrl Properties	Properties	Description
NetworkAddress	Syntax	object.NetworkAddress = string Read/Write (BSTR)
	Values	A valid IP address on the network such as 207.67.12.57.
	Default	None
	Description	This property is used to set the IP address that the control uses to communicate with the display. It is only necessary to set this property if the ConnectMode is set to a value of 1 - TCP/IP.
NetworkPort	Syntax	object.NetworkPort = value Read/Write [short]
	Values	A listening socket port such as 3001 (the Ethernet Adapter's port is 3001).
	Default	3001
	Description	This property is used to set the socket port that the control will use to communicate with the display. It is only necessary to set this property if the ConnectMode is set to a value of 1 - TCP/IP.
SerialComPort	Syntax	object.SerialComPort = string Read/Write [BSTR]
	Values	COM1 COM2 COM3 COM4
	Default	COM1
	Description	This property is used to set the serial port that the control will use to communicate with the display. It is only necessary to set this property if the ConnectMode is set to a value of 0 - Serial.
SerialBaudRate	Syntax	object.SerialBaudRate = value Read/Write [long]
	Values	110, 300, 600, 1200, 2400, 4800, 9600, 14400, 19200, 28800, 38400, 56000, 57600, 115200, 128000, 256000
	Default	9600
	Description	This property is used to set the serial baud rate that the control will use to communicate with the display. It is only necessary to set this property if the ConnectMode is set to a value of 0 - Serial. Currently, 9600 baud is the rate supported by the display.

Properties

InViewCtrl Properties	Properties	Description
SerialParity	Syntax	object.SerialParity = string Read/Write [BSTR]
	Values	Even Odd None Mark Space
	Default	Even
	Description	This property is used to set the serial parity that the control will use to communicate with the display. It is only necessary to set this property if the ConnectMode is set to a value of 0 - Serial. Currently, Even parity is the parity supported by the display.
SerialDataBits	Syntax	object.SerialDataBits = value Read/Write [short]
	Values	4 5 6 7 8
	Default	7
	Description	This property is used to set the serial data bits that the control will use to communicate with the display. It is only necessary to set this property if the ConnectMode is set to a value of 0 - Serial. Currently, 7 bits is the data bit setting supported by the display.
SerialStopBits	Syntax	object.SerialStopBits = value Read/Write [float]
	Values	1 and 2
	Default	2
	Description	This property is used to set the serial stop bits that the control will use to communicate with the display. It is only necessary to set this property if the ConnectMode is set to a value of 0 - Serial. Currently, 2 bits is the stop bit setting supported by the display.

Properties

InViewCtrl Properties	Properties	Description
DisplayAddress	Syntax	object.DisplayAddress = value Read/Write [short]
	Values	255 - Broadcast to all displays 254 - Display address 254 only 253 - Display address 253 only … 1 - Display address 1 only
	Default	255
	Description	This property is used to set the address the control will use to communicate with the display. If the address is set to 255, all of the connected displays will receive transmissions from the control.
PartitionSize	Syntax	object.PartitionSize = value Read/Write [short]
	Values	50, 51, … 450
	Default	100
	Description	This property is used to set the maximum size in bytes reserved for each message in the display. The size of each message also determines the maximum number of messages that can be stored in the display. The number of messages is calculated as 200000 / PartitionSize. For example, with the default size of 100 the display can hold 2000 messages. It is only necessary to set this property if the Partition method will be used to partition the display's memory.

Properties

InViewCtrl Properties	Properties	Description
Heartbeat	Syntax	object.Heartbeat = value Read/Write [short]
	Values	0 - No heartbeat from control 1 - Heartbeat generated by control 2 - Heartbeat disabled
	Default	0
	Description	This property is used to set how the control will handle the heartbeat requirement of the display. The display requires serial activity approximately every 3 seconds. In the absence of such activity the display will show a No Network Activity message. If the heartbeat property is set to 0, the activity is assumed to come from sources such as variable updates. If the heartbeat property is set to 1, the control will generate a serial heartbeat command that prevents the display from displaying the no activity message. If the heartbeat property is set to 2, the need for constant serial activity will be disabled in the display.

Methods

Methods

InViewCtrl Methods	Properties	Description
Initialize	Syntax	HRESULT Initialize()
	Parameters	None
	Return Value	S_OK - Success E_FAIL - Failure
	Description	This method is used to open the COM port or socket that will be used to communicate with the display. If Initialize is called more than once, any open connection will be closed, and a new connection opened.
Close	Syntax	HRESULT Close()
	Parameters	None
	Return Value	S_OK - Success E_FAIL - Failure
	Description	This method is used to close any open connection to free its resources for other applications. Any open connection is automatically closed when the control is unloaded.

Methods

InViewCtrl Methods	Properties	Description
Partition	Syntax	HRESULT Partition()
	Parameters	None
	Return Value	S_OK - Success E_FAIL - Failure
	Description	This method is used to partition the memory in the display. A partition command will be sent to the display address set by the DisplayAddress property. The size of the partitions is set to the PartitionSize property. Both DisplayAddress and PartitionSize should be set before calling this method.
ClearMessageQueue	Syntax	HRESULT ClearMessageQueue()
	Parameters	None
	Return Value	S_OK - Success E_FAIL - Failure
	Description	This method is used to clear the queue of messages that are running on the display. Once the queue is cleared the background message (if any) will be displayed. The clear message queue command will be sent to the display address set by the DisplayAddress property. DisplayAddress should be set before calling this method.
ClearMemory	Syntax	HRESULT ClearMemory()
	Parameters	None
	Return Value	S_OK - Success E_FAIL - Failure
	Description	This method is used to reset the display and clear its memory. After clearing memory the display will be set to 2000 messages of 100 bytes each, and each message slot will be set to a message of Message #n where n is the message number. The clear memory command will be sent to the display address set by the DisplayAddress property. DisplayAddress should be set before calling this method.
DownloadMessage	Syntax	HRESULT DownloadMessage(short nMessageNumber, short nPriority, short nPosition, short nMode, short nSpeed, short nFont, short nColor, BSTR bstrBody)

Methods

InViewCtrl Methods	Properties	Description
DownloadMessage	Parameters	nMessageNumber The number of the message slot in the display to receive the message. nPriority The priority assigned to the message. 0 - Low 1 - Medium 2 - High nPosition The position on the display where the message will run. 0 - Fill 1 - Top 2 - Bottom 3 - Middle nMode The presentation mode of the running message. 0 - Rotate 1 - Hold nSpeed The pause time between transitions of screens of the message. 0 - 0 Second 1 - 1 Second 2 - 2 Second 3 - 3 Second 4 - 4 Second 5 - 5 Second nFont The font used to display the message text. 0 - Five high 1 - Seven high 2 - Seven high fancy 3 - Ten high 4 - Sixteen high fancy 5 - Sixteen high 6 - Twenty-four/Thirty-two high 7 - Twenty-four/Thirty-two high fancy nColor The color used to display the message text. 0 - Red 1 - Green 2 - Yellow bstrBody The actual text of the message displayed. The length of the text and attributes cannot exceed the PartitionSize.
	Return Value	S_OK - Success E_FAIL - Failure

Methods

InViewCtrl Methods	Properties	Description
DownloadMessage	Description	This method is used to download a simple message to the display. The download message command will be sent to the display address set by the DisplayAddress property. DisplayAddress should be set before calling this method.
DownloadMessageEx	Syntax	HRESULT DownloadMessageEx (BSTR bstrMessage)
	Parameters	bstrMessage A complete InView protocol formatted download message string.
	Return Value	S_OK - Success E_FAIL - Failure
	Description	This method is for advanced users only and requires knowledge of the InView Protocol. It allows you to download a message of any complexity to the display. The download message command will be sent to the display address set by the DisplayAddress property. DisplayAddress should be set before calling this method.
AddMessage	Syntax	HRESULT AddMessage (short nMessageNumber)
	Parameters	nMessageNumber The number of the message to be added to the queue of running messages.
	Return Value	S_OK - Success E_FAIL - Failure
	Description	This method is used to trigger a message to run on the display. A message of lower priority will not be visible if a higher priority message is running. The message to trigger must be downloaded to the display before it can be triggered. The maximum number of messages that can be queued to run is 60. The add message command will be sent to the display address set by the DisplayAddress property. DisplayAddress should be set before calling this method.

Methods

InViewCtrl Methods	Properties	Description
RemoveMessage	Syntax	HRESULT RemoveMessage (short nMessageNumber)
	Parameters	nMessageNumber The number of the message to be removed from the queue of running messages.
	Return Value	S_OK - Success E_FAIL - Failure
	Description	This method is used to trigger a message to stop running on the display. The remove message command will be sent to the display address set by the DisplayAddress property. DisplayAddress should be set before calling this method.
SingleMessage	Syntax	HRESULT SingleMessage (short nMessageNumber)
	Parameters	nMessageNumber The number of the sole message to be added to the queue of running messages.
	Return Value	S_OK - Success E_FAIL - Failure
	Description	This method is used to trigger a single message to run on the display. Any messages currently running on the display will be removed. The message to trigger must be downloaded to the display before it can be triggered. The single message command will be sent to the display address set by the DisplayAddress property. DisplayAddress should be set before calling this method.
UpdateVariable	Syntax	HRESULT UpdateVariable (short nVariable, long nValue)
	Parameters	nVariable The variable number to update. Valid values are 0 … 99. nValue The new value for the variable. The display is limited to 16-bit numbers, which can be signed or unsigned.
	Return Value	S_OK - Success E_FAIL - Failure
	Description	This method is used to update a variable in the display. If the variable is embedded in a running message, the new value will be shown. The update variable command will be sent to the display address set by the DisplayAddress property. DisplayAddress should be set before calling this method.

Methods

InViewCtrl Methods	Properties	Description
UpdateVariableEx	Syntax	HRESULT UpdateVariableEx (short nVariable, long nValue)
	Parameters	nVariable The variable number to update. Valid values are 0 … 99. nValues The new value for the variable. The display is limited to 16-bit numbers, which can be signed or unsigned.
	Return Value	S_OK - Success E_FAIL - Failure
	Description	This method is used to update a variable in the display. If the variable is embedded in a running message, the new value will be shown. The update variable command will be sent to the display address set by the DisplayAddress property. DisplayAddress should be set before calling this method.
SetTime	Syntax	HRESULT SetTime (DATE dtTime, BOOL fMilitary)
	Parameters	dtTime The time used to update the display's clock. fMilitary A flag used to indicate if the time should be displayed using 24-hour format. TRUE - use 24-hour format FALSE - use AM/PM format
	Return Value	S_OK - Success E_FAIL - Failure
	Description	This method is used to set the display's clock and to set how the time will be shown on the display (AM/PM vs. 24-Hour). The set time command will be sent to the display address set by the DisplayAddress property. DisplayAddress should be set before calling this method.
SetDate	Syntax	HRESULT SetDate (DATE dtDate)
	Parameters	dtDate The date used to update the display's calendar.
	Return Value	S_OK - Success E_FAIL - Failure
	Description	This method is used to set the display's calendar. The set date command will be sent to the display address set by the DisplayAddress property. DisplayAddress should be set before calling this method.

Methods

InViewCtrl Methods	Properties	Description
ChangeDisplayAddress	Syntax	HRESULT ChangeDisplayAddress (short nNewDisplayAddress)
	Parameters	nNewDisplayAddress The new address to which the display will be set.
	Return Value	S_OK - Success E_FAIL - Failure
	Description	This method is used to change the address of a display. The change display address command will be sent to the display address set by the DisplayAddress property. DisplayAddress should be set before calling this method. Be careful when using the broadcast address (255) with this method on a network of displays.
ChangeDisplayBaudRate This method is only recognized by the P9x series of displays.	Syntax	HRESULT ChangeDisplayBaudRate short nNewDisplayBaudRate)
	Parameters	nNewDisplayBaudRate An enumerated value of the currently available baud rates. 0 = 9600 baud, 1 = 19200 baud, and 2 = 38400 baud.
	Return Value	S_OK - Success E_FAIL - Failure
	Description	This method is used to change the display's baud rate for communication transmissions. The change display baud rate command will be sent to the display address set by the DisplayAddress property. DisplayAddress should be set before calling this method.
	Example	ChangeDisplayBaudRate(1) Changes the display's baud rate to 19200 baud.

Methods

InViewCtrl Methods	Properties	Description
ChangeDisplayIPAddress This method is only recognized by the P9x series of displays.	Syntax	HRESULT ChangeDisplayIPAddress (BSTR ipaddress)
	Parameters	ipaddress An IPAddress string with the syntax of NNN.NNN.NNN.NNN, where each octet is between 0 and 255.
	Return Value	S_OK - Success E_FAIL - Failure
	Description	This method is used to change the display's IPAddress for TCP/IP communication. The change display IPAddress command will be sent to the display address set by the DisplayAddress property. DisplayAddress should be set before calling this method.
	Example	ChangeDisplayIPAddress (192.168.0.1) Changes the display's IPAddress to 192.168.0.1
ChangeDisplaySubnetMask This method is only recognized by the P9x series of displays.	Syntax	HRESULT ChangeDisplaySubnetMask (BSTR ipaddress)
	Parameters	ipaddress An IPAddress string with the syntax of NNN.NNN.NNN.NNN, where each octet is between 0 and 255.
	Return Value	S_OK - Success E_FAIL - Failure
	Description	This method is used to change the display's subnet mask for TCP/IP communication. The change display subnet mask command will be sent to the display address set by the DisplayAddress property. DisplayAddress should be set before calling this method.
	Example	ChangeDisplaySubnetMask (255.255.255.0) Changes the display's subnet mask to 255.255.255.0.

Methods

InViewCtrl Methods	Properties	Description
ChangeDisplayGateway This method is only recognized by the P9x series of displays.	Syntax	HRESULT ChangeDisplayGateway (BSTR ipaddress)
	Parameters	ipaddress An IPAddress string with the syntax of NNN>NNN>NNN>NNN, where each octet is between 0 and 255.
	Return Value	S_OK - Success E_FAIL - Failure
	Description	This method is used to change the display's gateway for TCP/IP communication. The change display gateway command will be sent to the display address set by the DisplayAddress property. DisplayAddress should be set before calling this method.
	Example	ChangeDisplayGateway (192.168.0.1) Changes the display's gateway to 192.168.0.1.
ClearBitmapTable This method is only recognized by the P9x series of displays.	Syntax	HRESULT ClearBitmapTable()
	Parameters	None
	Return Value	S_OK - Success E_FAIL - Failure
	Description	This method is used to clear the contents of the display's bitmap table. The clear bitmap table command will be sent to the display address set by the DisplayAddress property. DisplayAddress should be set before calling this method.
	Example	ClearBitmapTable() Clears the bitmap table for the display with the display address set through the DisplayAddress property.

Methods

InViewCtrl Methods	Properties	Description
DownloadBitmaps This method is only recognized by the P9x series of displays.	Syntax	HRESULT DownloadBitmaps (short nBitmapCount, BSTR bstrBitmaps)
	Parameters	nBitmapCount The number of bitmaps that will be included in the bstrBitmaps string. The maximum that can be downloaded is 2048. bstrBitmaps A string that contains the contents of each bitmap that will be downloaded concatenated together. The format of a single bitmap string is as follows: OOOOWWWHH[bitmap definition] OOOO = the ASCII hex offset (0 to 0x07FF) WWW = the bitmap width (0 to 0x020) HH = the bitmap height (0 to 0x20) [bitmap definition] = the bitmap information, where each row of the bitmap is compressed into a series of bytes. For example, a 24 x 24 bitmap will have 72 bytes of information (3 bytes for each row and the last 4 bits of the third byte being zeroed out because they are not used).
	Return Value	S_OK - Success E_FAIL - Failure
	Description	This method is used to download a range of bitmaps to a display. The range of bitmaps to be downloaded is based on the bitmap count passed into the method and the data for each bitmap is based on the string holding the concatenation of bitmap information. The download bitmaps command will be sent to the display address set by the DisplayAddress property. DisplayAddress should be set before calling this method.

Specifications

2706-P43, 2706-P42, 2706-P44, 2706-P72 Specifications

Display	**2706-P43R** **2706-P43C**	**2706-P42R[1], 2706-P42C[1]** **2706-P44R[2], 2706-P44C[2]**	**2706-P72CN*x*[1]** **2706-P74CN*x*[2]**
Display Type	LED matrix: Red (R) or Tri-Color (C)	LED matrix: Red (R) or Tri-Color (C)	LED matrix: Tri-Color (C)
Display Size (W x H), Approx.	173.2 x 10.2 cm (68.1 x 4 in.)	81.4 x 12.2 cm (36 x 4.8 in.) [1] 182.8 x 12.2 cm (72 x 4.8 in.)[2]	91.4 x 18.3 cm (36 x 7.2 in.)[1] 152.4 x 18.3 cm (60 x 7.2 in.) [2]
Display Array	120 x 7 pixels	120 x 16 or 240 x 16 pixels	120 x 24 or 200 x 24 pixels
Center to Center Pixel Spacing (Pitch)	14.48 mm (0.57 in.)	7.62 mm (0.3 in.)	7.62 mm (0.3 in.)
Number of Lines	1	1 or 2	1 to 4
Lines of Text/Character Height/ Minimum Characters per Line	1 line/4 in/20 char	1 line/4.8 in/12[1] or 24[2] 2 line/2.1 in/20[1] or 40[2]	1 line/7.2 in/12[1] or 20[2] 2 line/3.0 in/20[1] or 33[2] 3 line/2.1 in/20[1] or 33[2] 4 line/1/5 in/24[1] or 40[2]
Character Set	Standard and Extended ASCII	Standard and Extended ASCII	Standard and Extended ASCII
Viewing Distance, Approx.	60 m (200 ft)	60 m (200 ft)	100 m (350 ft)
Electrical and Environmental			
Input Voltage	100 … 240V ac; 50/60 Hz	100 … 240V ac; 50/60 Hz	120 … 240V ac; 50/60 Hz
Operating Temperature	0…50 °C (32…122 °F)	0…50 °C (32…122 °F)	0…50 °C (32…122 °F)
Humidity	5 … 95% noncondensing	5 … 95% noncondensing	5 … 95% noncondensing
Enclosure Approximate Weight	18 kg (40 lbs)	12.7 kg (28 lbs) or 22.7 kg (50 lbs)	27.2 kg (60 lbs) or 36.3 kg (80 lbs)
Enclosure Dimensions (W x D x H), Approx.	182.7 x 13.97 x 20.0 cm (71.9 x 5.5 x 7.88 in.)	102.57 x 13.97 x 20.0 cm (40.38 x 5.5 x 7.88 in.)[1] 194 x 13.97 x 20.0 cm (76.38 x 5.5 x 7.88 in.)[2]	107.32 x 15.24 x 34.93 cm (42.25 x 6 x 13.75 in.)[1] 168.28 x 15.24 x 34.93 cm (66.25 x 6 x 13;.75 in.)[2]
Ratings	NEMA 12	NEMA 12	NEMA 4, 4X
Certifications	ETL approved; CE marked	ETL approved; CE marked	ETL approved; CE marked

(1) Display is available in short format 0.91 m (3 feet).

(2) Display is available in long format 1.83 m (6 feet).

2706-P92, 2706-P94 Specifications

Display	2706-P92C	2706-P94C
Display Type	LED matrix: Tri-Color (C)	
Display Window Size (W x H), Approx.	91.4 x 24.4 cm (36 x 9.6 in.)(1)	182.9 x 24.4 cm (72 x 9.6 in.)(2)
Display Array	120 x 32 pixels	240 x 32 pixels
Center to Center Pixel Spacing (Pitch)	0.76 cm (0.3 in.)	
Number of Lines	1 to 5	
Lines of Text/Character Height/ Minimum Characters per Line	1 line/243.8 mm (9.6 in.)/13(1) 2 line/114.3 mm (4.5 in.)/13(1) 3 line/76.2 mm (3.0 in.)/13(1) 4 line/53.34 mm (2.1 in.)/20(1) 5 line/38.10 mm (1.5 in.)/24(1)	1 line/243.8 mm (9.6 in.)/26(2) 2 line/114.3 mm (4.5 in.)/26(2) 3 line/76.2 mm (3.0 in.)/26(2) 4 line/53.34 mm (2.1 in.)/40(2) 5 line/38.10 mm (1.5 in.)/48(2)
Character Set	Standard and Extended ASCII	
Viewing Distance, Approx.	137m (450 ft)	
Electrical and Environmental		
Input Voltage	100 … 240V ac; 50/60 Hz	
Current Draw	6.4 A at 100V ac; 2.8 A at 240V ac(1)	12 A at 100V ac; 5.2 A at 240V ac(2)
Operating Temperature	0…50 °C (32…122 °F)	
Humidity	5 … 95% noncondensing	
Enclosure Weight, Approx.	32 kg (70 lbs) or	54.4 kg (120 lbs)
Enclosure Dimensions (W x D x H), Approx.	105 x 13 x 40 cm (41.14 x 5.25 x 15.9 in.)(1)	196 x 13 x 40 cm (77.2 x 5.25 x 15.9 in.)(2)
Ratings	Designed to meet UL types 12, 13 and 4 (indoor use only)	
Certifications	cULus, CE and C-Tick	

(1) Display is available in short format 0.91 m (3 feet).

(2) Display is available in long format 1.83 m (6 feet).

Input Current Requirements for 2706-P92C and 2706-P94C

Line Voltage (V ac)	Frequency (Hz)	100% Display Load (Amp)	50% Display Load (Amp)	25% Display Load (Amp)
100 (2706-P92C)	50/60	3.6	2.1	1.3
100 (2706-P94C)	50/60	7.1	3.9	2.3
120 (2706-P92C)	50/60	2.9	1.7	1.0
120 (2706-P94C)	50/60	5.8	3.2	1.9
240 (2706-P92C)	50/60	1.4	0.9	0.6
240 (2706-P94C)	50/60	2.8	1.6	1.0

Display Load 2706-P9*x*	
100%	Condition - All display pixels are lit in amber.
	Usage - Highly unlikely, use this value for sizing input power circuit.
50%	Condition - 50% of the display lit in amber (screen full of 32 pixel amber 'B's).
	Usage - Unlikely, not a typical display condition, may be seen with use of bitmaps.
25%	Condition - Mixture of red, green and amber characters and spaces.
	Usage - Typical display load for most message types.

2706-P22R Specifications

Display Characters

Attribute	Value
Character Height Two line display	17.8 mm (0.7 in.)
Character Set English	Standard and Extended ASCII Characters
Characters per Display Line	20
Viewing Distance, Approx.	7.6 m (25 ft)
Character Type	Red LED Indicator

Electrical

Attribute	Value
Input Voltage	18 … 30V dc, 0.5 A at 18V dc
Input Power	10 Watts
Fuse Type	Fast Acting Littel fuse series 217, or equivalent, 1.6 A
Battery	Lithium(1)

(1) Refer to publication AG.5-4 for battery disposal information.

Serial Communications

Attribute	Value
Electrical Interface	RS-232 (EIA-/TIA-232-E) RS-485 (EIA-485)
Communication Rate	9600

Environmental

Attribute	Value
Temperature Range - Operating	0…55 °C (32…131 °F)
Temperature Range - Storage	-20…85 °C (-4…185 °F)
Humidity	5% … 95% (non-condensing)
Shock	Operating 15 g, Non-operating 30 g pulses
Vibration	Operating 2.0 g

Mechanical

Attribute	Value
Enclosure Type	UL listed for NEMA Type 12, 13, 4X (indoor use only) when mounted in a suitable enclosure of Type 12, 13, 4X, IP65, or IP54
Weight, Approx.	0.85 kg (1.87 lb)

Certifications

Attribute	Value
UL Listings	• UL listed for UL508-Industrial Control Products • UL Listed for UL1604-Hazardous Environments Class I, Division 2, Groups A, B, C and D; Class II, Division 2, Groups F and G; and Class III, Division 2 • UL Listed for Canadian Safety Standards CSA 22.2 No. 14, No. 213 and C22.2 No. 142
European Union Directive	• Electromagnetic Compatibility Directive (89/336/EEC) • EN 61000-6-2 Generic Immunity Standard - Industrial Environment • EN 50081-2 Generic Emission Standard - Industrial Environment • IEC 1131-2 Programmable Controllers - Equipment Class I
C-Tick	• AS/NZS 2064 Group 1, Class A

Catalog Number Explanation

TIP

- The 4 inch displays are available in NEMA 12 only.
- The 7 inch displays are available with the Standard LED pitch only.
- The 7 inch displays are available in color only.
- The 9 inch displays are available in color only.

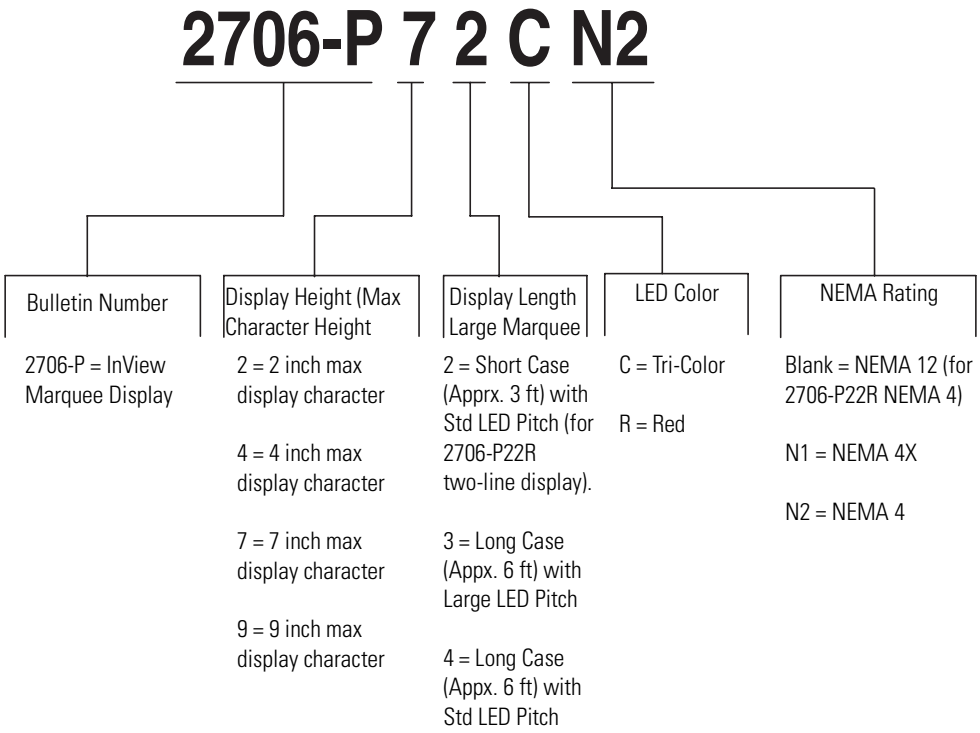

Temperature Protection in NEMA-Rated Enclosures

Some InView signs in NEMA-rated enclosures have automatic temperature controls that help to protect the sign from damage when the internal temperature of the sign is too hot to continue normal operation.

If the internal temperature of the sign reaches a pre-determined dimming point, the LED output from the sign is forced into a 50 percent reduced power mode, effectively dimming the brightness of LED output by about 50 percent.

If the internal temperature of the sign continues to increase, another sensing circuit will execute an automatic shut down to protect the sign from damage. The LED output from the sign is turned off.

The dimming and shutdown points are listed in the table below. Once the temperature drops below the auto-shutdown threshold, the LED output is turned on at the dimming level. Once the temperature drops below the dimming threshold, auto-dimming is disabled and the LED brightness is back to 100 percent.

Model	Enclosure	Dimming Point	Auto-Shutdown On
2706-P42, 2706-P44	NEMA 2	55 °C (131 °F)	70 °C (158 °F)
	NEMA 12	55 °C (131 °F)	70 °C (158 °F)
2706-P43	NEMA 12	55 °C (131 °F)	70 °C (158 °F)
2706-P72, 2706-P74	NEMA 2	55 °C (131 °F)	70 °C (158 °F)
	NEMA 12	55 °C (131 °F)	70 °C (158 °F)
	NEMA 4, NEMA 4x	55 °C (131 °F)	70 °C (158 °F)
2706-P92, 2706-P94	NEMA	55 °C (131 °F)	75 °C (167 °F)

TIP Take into account the effects of ambient temperature when evaluating mounting locations for the sign. You should always maintain recommended clearance distances around the sign and avoid poorly ventilated mounting locations that could be subject to radiation, convection, conduction or other thermal transfer effects.

A

additional information P9x
- compact flash card 2-7
- flash programmable firmware 2-9
- isolated communication ports 2-9
- legacy communications board kit 2-6
- multiple baud rate 2-7

alarm relay
- specifications A-3

ASCII characters 4-52

C

catalog number explanation B-1
change serial address 1-2
checkout procedure 1-2
communications
- connections 1-25
- specifications A-3

compact flash card P9x 2-7
CompactLogix
- out channel zero or one 3-5

connections
- electrical precautions 1-1

ControlLogix
- out channel zero 3-4

Control-T
- examples 4-5
- function frame 4-1

Control-V
- examples 4-9
- fuction frame 4-3

creating message file 2-16
cutout
- dimensions P22R 1-23

D

dimensions
- 2-line display P22R 1-24
- 4-line display P22R 1-24

dip switch P9x 2-4
- switch 1 2-4
- switch 2 2-5

DIP switch settings
- P22R 1-26

download message application 1-27

E

electrical
- connections
  - P22R 1-24
  - P42, P43, P44 1-2
  - P72, P74 1-14
  - P92C, P94C 1-19
- precautions 1-1

enclosure
- rating A-4

EU
- directives A-4

F

features
- P22 2-2
- P42, P44, P72, P74 2-1

flash programmable firmware 2-9
FlexLogix
- out channel zero 3-6

H

humidity A-4

I

installation 1-1
- cutouts P22R 1-23
- electrical precautions 1-1

InView communication used with Modbus ASCII 4-11
InView Control 5-1
- methods 5-7
- properties 5-3
- reference 5-2

InView Control API 5-1
- quick overview 5-1

InView Protocol 4-1
- functions and descriptions 4-41
- special function command 4-45
- text position placement 4-51
- used within Modbus ASCII protocol 4-41

InView System Connectivity 2-1
InView with Modbus ASCII 4-11
- display memory map 4-12
- longitudinal redundancy check 4-16
- LRC error check and calculation 4-16
- mode of transmission 4-12
- transmission methods 4-13

isolated communication ports P9x 2-9

L

legacy communications P9x 2-6

M

message file 2-16
- attaching a note 2-17
- category 2-18
- clear memory 2-22
- date time and variables 2-17
- download messages 2-20
- message header 2-19
- pause 2-19
- preview messages 2-19
- set the display address 2-19
- text color 2-17

message priorities 2-18
methods 5-7
- AddMessage 5-10
- ChangeDisplayAddress 5-13
- ChangeDisplayBaudRate 5-13
- ChangeDisplayGateway 5-15
- ChangeDisplayIPAddress 5-14
- ChangeDisplaySubnetMask 5-14
- ClearBitmapTable 5-15
- ClearMessageQueue 5-8
- Close 5-7
- DownloadBitmaps 5-16
- DownloadMessage 5-8, 5-9, 5-10
- DownloadMessageEx 5-10
- Initialize 5-7
- Partition 5-8
- RemoveMessage 5-11
- SetDate 5-12
- SetTime 5-12
- SingleMessage 5-11
- UpdateVariable 5-11
- UpdateVariableEx 5-12

MicroLogix
- out channel zero or one 3-3

Modbus ASCII functions 4-17
- add remove message 10 frame query 4-33
- add remove message 10 frame transmission 4-33
- cjamgomg display address 4-40
- clear display memory 4-20
- clear message queue in broadcast mode 4-20
- clear message queue in guaranteed mode 4-21
- protocol 4-10

mount instructions
- back-to-back mount 1-11
- back-to-back P9x 1-19
- ceiling mount 1-9
- cutout dimensions P22R 1-23
- P22R 1-23, 1-24
- P42, P43, P44 1-6
- P72, P74 series NEMA 4 and 4x 1-13
- P94C, P94C 1-17
- stack mount 1-10
- wall mount 1-7

multiple baud rate P9x 2-7

N

NEMA
- rating A-4

P

PLC5
- out channel zero 3-1

power
- requirements A-3

power-up messages 2-10
- P22 2-10
- P42, P43, P44, P72, P74, P92, P94 2-10

properties
- ConnectMode 5-3
- DisplayAddress 5-6
- Heartbeat 5-7
- NetworkAddress 5-4
- NetworkPort 5-4
- PartitionSize 5-6
- SerialBaudRate 5-4
- SerialComPort 5-4
- SerialDataBits 5-5
- SerialParity 5-5
- SerialStopBits 5-5

R

reference material 4-52
relay
- specifications A-3

RS-232 to RS-485 networking 1-27
RS-485
- echo 1-28
- ground 1-29
- terminate 1-29

S

serial address
- change 1-2

serial ASCII communications 2-1
serial communications
specifications A-3
setting up the display 2-11
settings
DIP switch P22R 1-26
shock A-4
SLC 5/03, 5/04 or 5/05
out channel zero 3-2
specifications A-1

T

technical specifications A-1
P22R A-3
P22R additional information A-5
P42, P43, P44, P72 A-1
P92, P94 A-2
temperature
operating ranges A-4
protection C-1
temperature protection C-1
Trigger Messages and Update Variables 4-1

U

UL
listing A-4
use Modbus ASCII functions
download messages 4-27
heartbeat 4-18
preview message 4-25
priority messaging using query 4-34
priority messaging using transmission 4-35
read message queue using 03 frame 4-38
read variables using 03 frame 4-39
set time in broadcast mode 4-21
set time in broadcast mode 24 hour format 4-22
update variable using 06 frame in broadcast mode 4-35
update variable using 06 frame in guaranteed mode 4-36
update variables using 10 frame in broadcast mode 4-36
update variables using 10 frame in guaranteed mode 4-37
using Modbus ASCII functions
setting day and date in broadcast mode 4-23

V

vibration A-4
viewing distance A-3
voltage
input requirements A-3

Rockwell Automation Support

Rockwell Automation provides technical information on the Web to assist you in using its products. At http://support.rockwellautomation.com, you can find technical manuals, a knowledge base of FAQs, technical and application notes, sample code and links to software service packs, and a MySupport feature that you can customize to make the best use of these tools.

For an additional level of technical phone support for installation, configuration, and troubleshooting, we offer TechConnect Support programs. For more information, contact your local distributor or Rockwell Automation representative, or visit http://support.rockwellautomation.com.

Installation Assistance

If you experience a problem with a hardware module within the first 24 hours of installation, please review the information that's contained in this manual. You can also contact a special Customer Support number for initial help in getting your module up and running.

United States	1.440.646.3223 Monday – Friday, 8am – 5pm EST
Outside United States	Please contact your local Rockwell Automation representative for any technical support issues.

New Product Satisfaction Return

Rockwell tests all of its products to ensure that they are fully operational when shipped from the manufacturing facility. However, if your product is not functioning, it may need to be returned.

United States	Contact your distributor. You must provide a Customer Support case number (see phone number above to obtain one) to your distributor in order to complete the return process.
Outside United States	Please contact your local Rockwell Automation representative for return procedure.

InView message displays, PLC controllers, SLC controllers, CompactLogix controllers, ControlLogix controllers, MicroLogix controllers are trademarks of Rockwell Automation, Inc.

Trademarks not belonging to Rockwell Automation are property of their respective companies.

www.rockwellautomation.com

Power, Control and Information Solutions Headquarters

Americas: Rockwell Automation, 1201 South Second Street, Milwaukee, WI 53204-2496 USA, Tel: (1) 414.382.2000, Fax: (1) 414.382.4444
Europe/Middle East/Africa: Rockwell Automation, Vorstlaan/Boulevard du Souverain 36, 1170 Brussels, Belgium, Tel: (32) 2 663 0600, Fax: (32) 2 663 0640
Asia Pacific: Rockwell Automation, Level 14, Core F, Cyberport 3, 100 Cyberport Road, Hong Kong, Tel: (852) 2887 4788, Fax: (852) 2508 1846

Publication 2706-UM016D-EN-P - March 2006 PN 41061-279-01(4)
Supersedes Publication 2706-UM016C-EN-P - May 2004
Copyright © 2006 Rockwell Automation, Inc. All rights reserved. Printed in the U.S.A.