Installation Instructions

FLEX Ex Thermocouple/RTD Input Module

Catalog Number 1797-IRT8

Contents

For Information About	See Page
Important User Information	2
Module Installation	3
Installation in Zone 1	5
Installation in Zone 22	5
European Communities (EC) Directive Compliance	6
Inputs	8
Indicators	14
Output Map	15
Fault Mode - Write Word 0	16
Add-on Filter Selections - Write Word 0	16
Reference Junction Selection - Write Word 0	16
RTD Offset Select - Write Word 2	17
Sensor Type Select - Write Word 1	18
Specifications	19
Entity Parameters	23

Publication 1797-IN004G-EN-P - August 2017

Important User Information

Solid state equipment has operational characteristics differing from those of electromechanical equipment. Safety Guidelines for the Application, Installation and Maintenance of Solid State Controls (Publication SGI-1.1 available from your local Rockwell Automation sales office or online at http://www.literature.rockwellautomation.com) describes some important differences between solid state equipment and hard-wired electromechanical devices. Because of this difference, and also because of the wide variety of uses for solid state equipment, all persons responsible for applying this equipment must satisfy themselves that each intended application of this equipment is acceptable.

In no event will Rockwell Automation, Inc. be responsible or liable for indirect or consequential damages resulting from the use or application of this equipment.

The examples and diagrams in this manual are included solely for illustrative purposes. Because of the many variables and requirements associated with any particular installation, Rockwell Automation, Inc. cannot assume responsibility or liability for actual use based on the examples and diagrams.

No patent liability is assumed by Rockwell Automation, Inc. with respect to use of information, circuits, equipment, or software described in this manual.

Reproduction of the contents of this manual, in whole or in part, without written permission of Rockwell Automation, Inc., is prohibited.

Throughout this manual we use notes to make you aware of safety considerations.

WARNING	Identifies information about practices or circumstances that can cause an explosion in a hazardous environment, which may lead to personal injury or death, property damage, or economic loss.
IMPORTANT	Identifies information that is critical for successful application and understanding of the product.
ATTENTION	Identifies information about practices or circumstances that can lead to personal injury or death, property damage, or economic loss. Attentions help you identify a hazard, avoid a hazard, and recognize the consequence
SHOCK HAZARD	Labels may be located on or inside the product to alert people that dangerous voltage may be present.
BURN HAZARD	Labels may be located on or inside the product to alert people that surfaces may be dangerous temperatures.

Module Installation

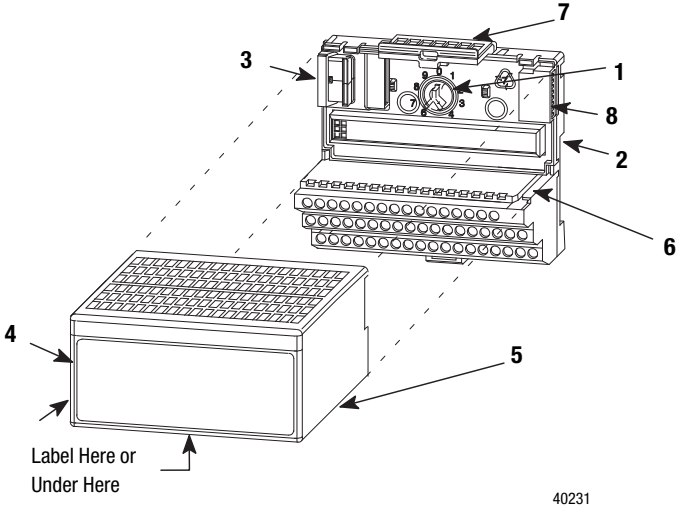

Component Identification			
1	Keyswitch	5	Alignment Bar
2	Terminal Base Unit	6	Alignment Groove
3	Flexbus Connector	7	Latching Mechanism
4	Module	8	Cap Plug

This module must be used with a 1797-TB3 or 1797-TB3S intrinsically safe terminal base unit.

ATTENTION

This equipment is considered Group 1, Class A industrial equipment according to IEC/CISPR Publication 11. Without appropriate precautions, there may be potential difficulties ensuring electromagnetic compatibility in other environments due to conducted as well as radiated disturbance.

This equipment is supplied as open-type equipment. It must be mounted within an enclosure that is suitably designed for those specific environmental conditions that will be present and appropriately designed to prevent personal injury resulting from accessibility to live parts. The interior of the enclosure must be accessible only by the use of a tool. Subsequent sections of this publication may contain additional information regarding specific enclosure type ratings that are required to comply with certain product safety certifications.

1. Rotate keyswitch (1) on terminal base unit (2) clockwise to position 2 as required for this type of module.

   Do not change the position of the keyswitch after wiring the terminal base unit.

2. Make certain the flexbus connector (3) is pushed all the way to the left to connect with the neighboring terminal base/adapter.

   You cannot install the module unless the connector is fully extended.

3. Make sure the pins on the bottom of the module are straight so they will align properly with the connector in the terminal base unit.
4. Position the module (4) with its alignment bar (5) aligned with the groove (6) on the terminal base.
5. Press firmly and evenly to seat the module in the terminal base unit.

   The module is seated when the latching mechanism (7) is locked into the module.

6. Make certain that you only connect terminal base units to other intrinsically safe system modules or adapters to maintain the integrity of the intrinsically-safe backplane.

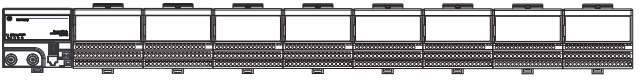

20128M

7. Remove cap plug (8) and attach another intrinsically safe terminal base unit to the right of this terminal base unit if required.

Installation in Zone 1

This module must not be exposed to the environment. Provide a suitable metal enclosure. This module has a protection factor of IP20.

ATTENTION

This module cannot be used in an intrinsically safe environment after it has been exposed to nonintrinsically safe signals.

Installation in Zone 22

When the module is installed in Zone 22, the following cabinets must be used: IVK-ISRPI-V16LC; IVK-ISRPI-V8HYW; or IVK-ISRPI-V8LC. These cabinets can be purchased from Pepperl+Fuchs GmbH, Lilienthalstrasse 200 68307 Mannheim, Germany. Information available at www.pepperl-fuchs.com.

The IS-RPI cabinets (type IVK2-ISRPI-V8LC, IVK2-ISRPI-V8HYW, or IVK2-ISPRI-V16LC) ensures the basic protection for the intrinsically safe apparatus of the FLEX Ex I/O system for use in Zone 22. It corresponds with category 3D according to RL 94/9 EG and with the type label marked with the following information:

Pepperl+Fuchs GmbH
68307 Mannheim
IVK2-ISRPI-V8LC (or IVK2-ISRPI-V8HYW or IVK2-ISRPI-V16LC)
EX Ex II 3 D Ex tD A22 IP54 T70 °C
CE
Serial (manufacturing) number
Model

Electrostatic Charge

Protect the system against electrostatic charge. Post a sign near this module:
WARNING Avoid electrostatic charging.
ADVERTÊNCIA! PREVENIR CONTRA O ACÚMULO DE CARGA ELETROSTÁTICA.
For your convenience, a sign that can be cut out and posted is included in this installation instruction.

Removal and Insertion Under Power

WARNING

These modules are designed so you can **remove and insert them under power**. However, take special care when removing or inserting modules in an active process. I/O attached to any module being removed or inserted can change states due to its input or output signal changing conditions.

If you insert or remove the module while backplane power is on, an electrical arc can occur. This could cause an explosion in hazardous location installations.

Be sure that power is removed or the area is nonhazardous before proceeding.

European Communities (EC) Directive Compliance

If this product has the CE mark it is approved for installation within the European Union and EEA regions. It has been designed and tested to meet the following directives.

EMC Directive

These products are tested to meet the Council Directive 2014/30/EU by applying the following standards:

- EN 61000-6-4:2007, Electromagnetic Compatibility (EMC) - Part 6-4: Generic Standard for Industrial Environments (Class A)
- EN 61000-6-2:2005, Electromagnetic Compatibility (EMC) - Part 6-2: Generic Standards - Immunity for Industrial Environments
- EN 61326-1:2013 (Industrial), Electrical Equipment For Measurement, Control, and Laboratory Use - Industrial EMC Requirements

European Hazardous Location Approval

The following applies to products marked CE Ex II (1)2 G and CE Ex II (1) D

- Are Equipment Group II, Equipment Category (1) 2, and comply with the Essential Health and Safety Requirements relating to the design and construction of such equipment given in Annex II to Directive 2014/34/EU. See the EC Declaration of Conformity at http://www.rockwellautomation.com/products/certification for details.
- The type of protection is "Ex ib[ia] IIC T4" and "[Ex iaD]" according to EN 60079-11.
- Comply to Standards EN 60079-0:2006, EN60079-11:2007, EN 60079-26:2004, EN 61241-0:2006, and EN 61241-11:2006, reference certificate number DMT 98 ATEX E 023 X.
- Are intended for use in areas in which explosive atmospheres caused by gases, vapors, mists, or air are likely to occur occasionally. Such locations correspond to Zone 1 or 2 classification according to ATEX directive 2014/34/EU.

IEC Hazardous Location Approval

The following applies to products with the IECEx certification:

- Are intended for use in areas in which explosive atmospheres caused by gases, vapors, mists, or air are likely to occur only infrequently and for short periods. Such locations correspond to Zone 1 or 2 classification to IEC 60079-0.
- The type of protection is "[Zone 0] Ex ib[ia] IIC T4" according to IEC 60079-11 and "[Ex iaD]" according to IEC 60079-11.
- Comply to Standards IEC 60079-0:2004, IEC 60079-11:2006, IEC 60079-26:2004, IEC 61241-0:2004, and IEC 61241-11:2005, reference IECEx certificate number IECEx BVS 09.0029X.

Special Conditions for Safe Use:

The module may only be used with the terminal base type 1797-TB3/* or type 1797-TB3S/* (DMT 98 ATEX E012U)

A warning label shall be installed in immediate proximity of these apparatus: **ATTENTION! Avoid electrostatic charging**.

Inputs

Each input can be operated from a thermocouple (TC) or resistance temperature detector (RTD). **Do not apply any nonintrinsically safe signals to this module.**

When using an intrinsically safe electrical apparatus according to EN50020, the European directives and regulations must be followed.

The channels in this module are electrically connected to each other and have a common plus-line.

IMPORTANT When interconnecting several lines, you must consider the total accumulated power and check for intrinsic safety.

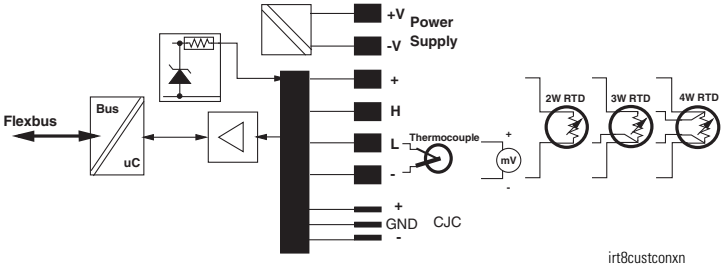

Wire to a 1797-TB3 or 1797-TB3S Terminal Base Unit

Connect wiring to the terminal base as shown below.

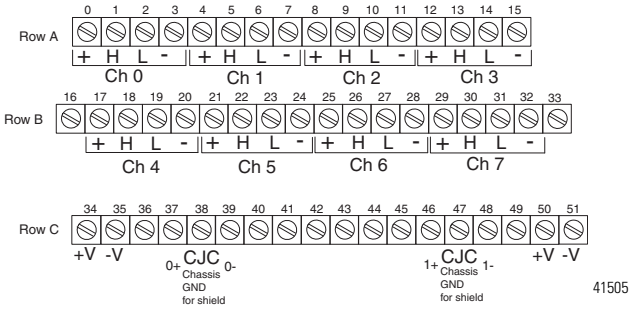

No connection allowed to terminals 36, and 49

Wiring

1. For RTD inputs:

   a. connect the individual source current input wiring to (+) terminals for each individual channel (0, 4, 8, and 12) on the 0 to 15 row (A) and terminals 17, 21, 25, and 29 on the 16 to 33 row (B) as indicated in the table below.

   b. connect the associated signal return (-) to the corresponding (-) terminals (3, 7, 11, and 15) on the 0 to 15 row (A), and terminals 20, 24, 28, and 32 on the 16 to 33 row (B).

2. For thermocouple inputs:

   a. connect the individual high signal input wiring to (L) terminals for each individual channel (2, 6, 10, and 14) on the 0 to 15 row (A) and terminals 19, 23, 27, and 31 on the 16 to 33 row (B) as indicated in the table below.

   b. connect the associated low signal (-) to the corresponding (-) terminals (3, 7, 11, and 15) on the 0 to 15 row (A), and terminals 20, 24, 28, and 32 on the 16 to 33 row (B).

   c. connect cold junction compensation wiring to terminals 37, 38, and 39, and terminals 46, 47, and 48.

d. Connect the tail of the CJC as follows:

- when using inputs 0 to 3 (row A) only for thermocouple inputs: connect the tail of CJC1 to terminal 5 and CJC2 to terminal 12 on row A.
- when using inputs 4 to 7 (row B) only for thermocouple inputs: connect the tail of CJC1 to terminal 22 and CJC2 to terminal 29 on row B.
- when using thermocouple inputs 0 to 7: connect the tail of CJC1 to terminal 5 on row A, and CJC2 to terminal 29 on row B.

IMPORTANT Whenever you use thermocouple inputs, you must use both cold junction compensators

3. Connect +V to terminal 34 on the 34 to 51 row (C).

4. Connect -V to terminal 35 on the 34 to 51 row (C).

WARNING

Make certain that you power this module with an intrinsically safe power supply. Do not exceed the values listed in the specifications for this module.
If you connect or disconnect wiring while the field-side power is on, an electrical arc can occur. This could cause an explosion in hazardous location installations. Be sure that power is removed or the area is nonhazardous before proceeding.

5. If continuing power to the next terminal base unit, connect a jumper from terminal 50 (+V) on this base unit to terminal 34 on the next base unit.

6. If continuing common to the next terminal base unit, connect a jumper from terminal 51 (-V) on this base unit to terminal 35 on the next base unit.

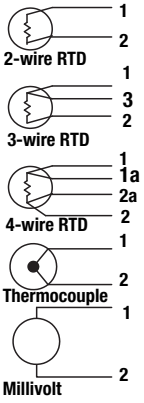

Type of Input	Connect the Following				
	+	H	L	-	Shield[1]
RTD - 2-wire	1			2	
RTD - 3-wire	1		3	2	
RTD - 4-wire	1	1a	2a	2	
Thermocouple			1	2	
Millivolt			1	2	

1Terminals 16, 33, 40…45 are chassis ground.

RTD or Thermocouple Channel	RTD Source Current (+)	High Signal Terminal (H)	Low Signal Terminal (L)	Signal Return (-)
0	0	1	2	3
1	4	5	6	7
2	8	9	10	11
3	12	13	14	15
4	17	18	19	20
5	21	22	23	24
6	25	26	27	28
7	29	30	31	32
+V		Terminals 34 and 50		
-V		Terminals 35 and 51		

1 Terminals 37, 38, and 39, and 46, 47, and 48 are for cold junction compensation (with 38, and 47 chassis ground). Connect CJC1 to terminal 5 or 22, CJC2 to terminal 12 or 29

2 Terminals 16, 33, and 40…45, are chassis ground.

ATTENTION

Do not use the unused terminals on this terminal base unit. Using these terminals as supporting terminals can result in damage to the module and/or unintended operation of your system.

Example of 2-, 3-, and 4-wire RTD and Thermocouple Wiring to a 1797-TB3 Terminal Base Unit

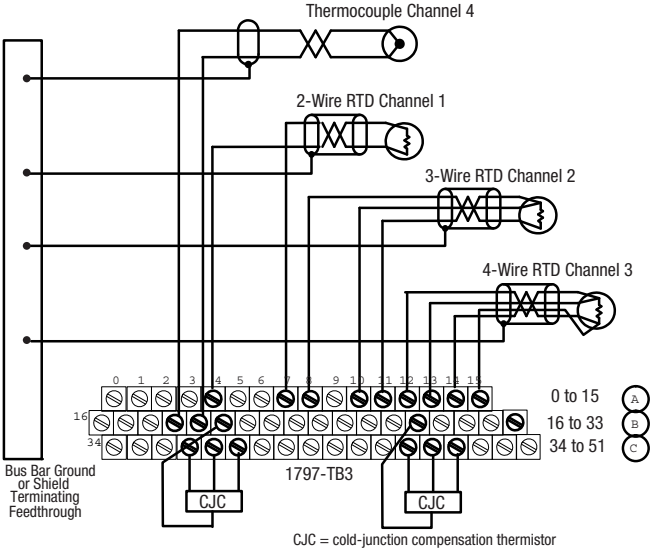

Example of Millivolt Wiring to a 1797-TB3 Terminal Base Unit

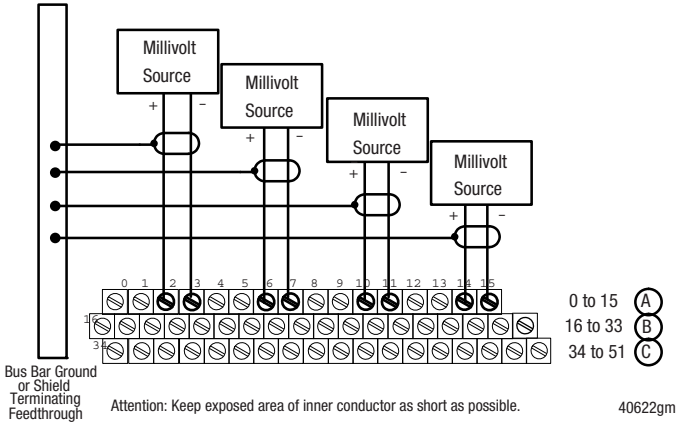

Grounding

All I/O wiring must use shielded wire. Shields must be terminated external to the module, such as bus bars and shield-terminating feed throughs.

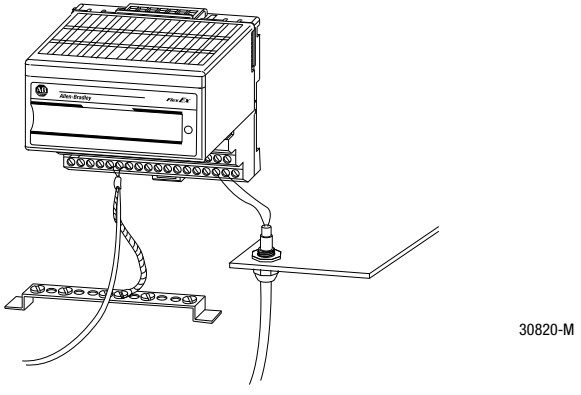

Indicators

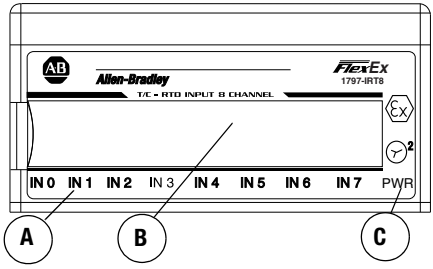

A = Status Indicators -
Flashing red - channel fault - Channel 0 indicator will turn red while power-up check is running.
(Channel 0 solid red - module did not pass power-up test.)

B = Insertable labels for writing individual I/O designations

C = Power Indicator - green - indicates power applied to module

Input Map

Bit⇨	15	14	13	12	11	10	09	08	07	06	05	04	03	02	01	00
Word⇓	Read															
0	Channel 0 Input Data															
1	Channel 1 Input Data															
2	Channel 2 Input Data															
3	Channel 3 Input Data															
4	Channel 4 Input Data															
5	Channel 5 Input Data															
6	Channel 6 Input Data															
7	Channel 7 Input Data															
8	Overrange Alarm Bits (channel 0 = bit 08, ch 1 = bit 09, and so on)								Underrange Alarm Bits (ch 0 = bit 00, ch 1 = bit01, and so on)							
9	Flt Alm ch 7	Flt Alm ch 6	Flt Alm ch 5	Flt Alm ch 4	Flt Alm ch 3	Flt Alm ch 2	Flt Alm ch 1	Flt Alm ch 0		CJC 2 Alm	CJC 1 Alm		Diagnostic Status			
10		Module command response							Module response data							

Output Map

Bit⇨	15	14	13	12	11	10	09	08	07	06	05	04	03	02	01	00
Word⇓	Write															
0					Data Format				Flt Mode ch 4…7	Flt Mode ch 0…3	Reference Junction			Filter Cutoff		
1	TC/RTD Ch 4…7		Sensor Mode ch 4…7		Sensor Type Ch 4…7				TC/RTD Ch 0…3		Sensor Mode Ch 0…3		Sensor Type Ch 0…3			
2	RTD Offset ch 7		RTD Offset ch 6		RTD Offset ch 5		RTD Offset ch 4		RTD Offset ch 3		RTD Offset ch 2		RTD Offset ch 1		RTD Offset ch 0	
3		Module command							Module command data							

Data Format for All Channels - Write Word 0

Bit	11	10	09	08	Data type for channels 0…7
	0	0	0	0	°C (see note)
	0	0	0	1	°F (see note)
	0	0	1	0	°K (see note)
	0	0	1	1	-32767…+32767
	0	1	0	0	0…65535
	0101 to 1111 not used				

Note: Module defaults to -4000…10,000 in Millivolt mode, and 0…5000 in Ohms mode.

Fault Mode - Write Word 0

Bit	06	Fault enable for channels 0…3
	07	Fault enable for channels 4…7
		0 = disabled 1 = enable wire-off detection

Add-on Filter Selections - Write Word 0

Bit	02	01	00	Definition
	0	0	0	Hardware filtering only (default filtering)
	0	0	1	40 Hz (25 ms)
	0	1	0	10 Hz (100 ms)
	0	1	1	4 Hz (250 ms)
	1	0	0	2 Hz (500 ms)
	1	0	1	1 Hz (1 s)
	1	1	0	0.5 Hz (2 s)
	1	1	1	0.2 Hz (5 s)

Reference Junction Selection - Write Word 0

Bits 03…05	Reference Junction - used when sensor is set to thermocouple and sensor mode is set to internal compensation. Sets a fixed reference junction to compensate all thermocouple channels.				
	Bit	05	04	03	Reference Junction
		0	0	0	0 °C
		0	0	1	20 °C
		0	1	0	25 °C
		0	1	1	30 °C
		1	0	0	40 °C
		1	0	1	50 °C
		1	1	0	60 °C
		1	1	1	70 °C

Sensor Mode Select - Write Word 1

Bit	05	04	Sensor mode for channels 0…3
	13	12	Sensor mode for channels 4…7
			Thermocouple Mode
	0	0	External compensation - uses cold junction sensor
	0	1	Internal compensation - Uses the value selected for reference junction
	1	0	No compensation (Data is referenced to 0 °C)
	1	1	Differential measurement between 2 channels
			RTD Mode
	0	0	2-wire RTD - no compensation
	0	1	2-wire RTD with user compensation
	1	0	3-wire RTD
	1	1	4-wire RTD

RTD Offset Select - Write Word 2

Bit	01	00	RTD Offset Select Bits - Channel 0
	03	02	RTD Offset Select Bits - Channel 1
	05	04	RTD Offset Select Bits - Channel 2
	07	06	RTD Offset Select Bits - Channel 3
	09	08	RTD Offset Select Bits - Channel 4
	11	10	RTD Offset Select Bits - Channel 5
	13	12	RTD Offset Select Bits - Channel 6
	15	14	RTD Offset Select Bits - Channel 7
	0	0	Use channel loop compensation value stored during calibration procedure for 2-wire RTD (default = 0 Ω)
	0	1	5 Ω
	1	0	10 Ω
	1	1	15 Ω

Note: This parameter not applicable for Cu 10 Ω, which defaults to 0 Ω.

Sensor Type Select - Write Word 1

RTD Type					
Bit	**03**	**02**	**01**	**00**	**Sensor type for channels 0…3**
Bit	**11**	**10**	**09**	**08**	**Sensor type for channels 4…7**
	0	0	0	0	Resistance (default)
	0	0	0	1	100 Ω Pt α = 0.00385 Euro (-200…+870 °C)
	0	0	1	0	200 Ω Pt α_ = 0.00385 Euro (-200…+380 °C)
	0	0	1	1	100 Ω Pt α = 0.003916 U.S. (-200…+630 °C)
	0	1	0	0	200 Ω Pt α = 0.003916 U.S. (-200…+377 °C)
	0	1	0	1	100 Ω Nickel α = 0.00618 U.S. (-60…+250 °C)
	0	1	1	0	200 Ω Nickel α = 0.00618 U.S. (-60…+200 °C)
	0	1	1	1	120 Ω Nickel α = 0.00672 U.S. (-80…+320 °C)
	1	0	0	0	10 Ω Copper α = 0.00427 U.S. (-200…+260 °C)
	1001…1111 not used				
Thermocouple Type					
Bit	**03**	**02**	**01**	**00**	**Sensor type for channels 0…3**
Bit	**11**	**10**	**09**	**08**	**Sensor type for channels 4…7**
	0	0	0	0	mV (default)
	0	0	0	1	B 300…1800 °C (572…3272 °F)
	0	0	1	0	E -270…1000 °C (-454…1832 °F)
	0	0	1	1	J -210…1200 °C (-346…2192 °F)
	0	1	0	0	K -270…1372 °C (-454…2502 °F)
	0	1	0	1	TXK/XK(L) -200…800 °C (-328…1472 °F)
	0	1	1	0	N -270…1300 °C (-454…2372 °F)
	0	1	1	1	R -50…1768 °C (-58…3214 °F)
	1	0	0	0	S -50…1768 °C (-58…3214 °F)
	1	0	0	1	T -270…400 °C (-454…752 °F)
	1010…1111 not used				

Repair

This module is not field-repairable. Any attempt to open this module will void the warranty and IS certification. If repair is necessary, return this module to the factory.

Specifications

Specifications - 1797-IRT8 Thermocouple/RTD Module	
Number of Inputs	8 channels
IS input type	Ex ia IIB/IIC T4 AEx ia IIC T4 Class I, II, III, Division 1 Group A-G T4
IS module type	Ex ib IIB/IIC T4 AEx ib IIC T4 Class I, Division 1 Group A-G T4
Input Type	Suitable for Pt 100, Pt 200, Ni 100, Ni 120, Ni 200, 10 Cu RTD, thermocouple Type B, E, J, K, N, R, S, T, TXK/XK (L) Configuration via internal bus
Signal Input Range	0…485 Ω; -40…100 mV
Settling Time to 99% of Final Value	8 ms (mV mode, °F thermocouple)
Open RTD Detection	Out of range upscale reading
Lead Resistance Compensation	< 15 W total
Transfer Characteristics	
Accuracy	RTDs: 0.1% of span @ 20 °C, filter cutoff < 1 Hz Thermocouples: 0.1% of span @ 20 °C, filter cutoff < 1 Hz Cold junction compensation = ±1 °C
Temperature Effect	150 ppm/°C (primary range)
Indicators	8 red fault indicators 1 green module power indicator
Specifications continued on next page	

Data Organization	
Overrange Alarm	Individually for each channel
Lead Breakage Alarm	Individually for each channel
Fault State	Individually for each channel (includes overrange, lead breakage and short circuit)
Sensor Mode RTD 2, 3, or 4-wire,	Common to groups of 4 channels (ch 0…3, ch 4…7)
TC Sensor Type (such as TC, Type B, E, J..., RTD or mV	Common to groups of 4 channels (ch 0…3, ch 4…7)
Internal Reference Junction (TC mode)	Common to all channels (0 °C, 20 °C, 25 °C, 30 °C, 40 °C, 50 °C, 60 °C, 70 °C selectable
Output (Intrinsically Safe) (16 Position Male/Female Flexbus Connector)	$U_i \leq 5.8V$ $I_i \leq 400$ mA Li = Negligible Ci $\leq 1.35\ \mu F$
Isolation Path	Isolation Type
Input to Power Supply	Galvanic to DIN EN60079-11
Input to Flexbus	Galvanic to DIN EN60079-11
Input to Input	None
Power Supply to Flexbus	Galvanic to DIN EN60079-11
Power Supply (+V, -V Intrinsically Safe)	$U_i \leq 9.5V$ dc $I_i \leq 1$ A Li = Negligible Ci = Negligible
Module Field-side Power Consumption	1.6 W
Power Dissipation	1.6 W
Thermal Dissipation	Max 5.46 BTU/hr
Module Location	Cat. No. 1797-TB3 or 1797-TB3S Terminal Base Unit
Conductor Wire Size	4 mm^2 (12 gauge) stranded max 1.2 mm (3/64in.) insulation max
Dimensions Metric Imperial	46 mm x 94 mm x 75 mm (1.8 in. x 3.7 in. x 2.95 in.)
Weight	200 g (approximate)
Keyswitch Position	2
Specifications continued on next page	

Environmental Conditions	
Operational Temperature	-20…+70°C (-4…+158°F)
Storage Temperature	-40…+85°C (-40…+185°F)
Relative Humidity	5…95% noncondensing
Shock Operating	Tested to 15 g peak acceleration, 11(+1) ms pulse width
Nonoperating	Tested to 15 g peak acceleration, 11(+1) ms pulse width
Vibration	Tested 2 g @ 10…500 Hz per IEC68-2-6
Agency Certification	
CENELEC	II (1) 2G Ex ib[ia] IIC T4 II (1) D [Ex iaD]
U, C-UL	Class I, Groups A, B, C and D; Class II, Groups E, F and G; Class III Hazardous Locations Class I Zone 1 AEx ib[ia] IIC T4,
FM	Intrinsically safe Class I, Div 1, Groups A, B, C, D, T4. Associated Apparatus with intrinsically safe Connection Class I, II, III, Div 1, Groups A--G Intrinsically safe Class I, Zone 1, AEx ib[ia] IIC T4.
INMETRO	BR-Ex ia/ib IIB/IIC T4
IECEx	[Zone 0] Ex ib[ia] IIC T4 [Ex iaD]
Certificate of Conformity	
CENELEC	DMT 98 ATEX E 023 X
UL, C-UL	UL, C-UL File Number E197983
FM	FM Certificate Number 3009806
INMETRO	05/UL-BRAE-0015X INMETRO
IECEx	IECEx BVS 09.0029X

UL, C-UL Certification

IMPORTANT For detailed certification information, refer to the FLEX Ex System Certification Reference Manual, publication 1797-RM001.

If these products have the UL/C-UL mark, they have been designed, evaluated, tested, and certified to meet the following standards:

- UL 913, 1988, Intrinsically Safe Apparatus and Associated Apparatus for Use in Class I, II, and III Division 1, Hazardous (Classified) Locations
- UL 1203, Explosion-Proof and Dust-Ignition-Proof Electrical Equipment for Use in Hazardous (Classified) Locations
- UL 2279, Electrical Equipment for Use in Class I, Zone 0, 1, and 2 Hazardous (Classified) Locations
- UL 61010, UL Standard for Safety Electrical Equipment For Measurement, Control, and Laboratory Use; Part 1: General Requirements
- CSA C22.2 No. 157-92, Intrinsically Safe and Non-Incendive Equipment for Use in Hazardous Locations
- CSA C22.2 No. 30-M1986, Explosion-Proof Enclosures for Use in Class I Hazardous Locations
- CSA-E79-0-95, Electrical Apparatus for Explosive Gas Atmospheres, Part 0: General Requirements
- CSA-E79-11-95, Electrical Apparatus for Explosive Gas Atmospheres, Part 11: Intrinsic Safety “i”
- CSA C22.2 No. 14-95, Industrial Control Equipment

Entity Parameters

CE/CENELEC I/O Entity Parameters

Input circuits (+ to -) for ch0 to ch7 (terminals: 0 to 3, 4 to 7; 8 to 11, 12 to 15, 17 to 20, 21 to 24, 25 to 28, 29 to 32)

	Protection	Group	Allowed Capacitance	Allowed Inductance	L_0/R_0 Ratio
U_0 = 9V I_0 = 37 mA P_0 = 83 mW	Ex ia	IIB	40 µF	80 mH	1.7 mH/Ω
	Ex ia	IIC	4.9 µF	20 mH	0.4 mH/Ω

CJC circuits (+ to -) for CJC0 and CJC1 (terminals: 37, 39, 46, and 48)

	Protection	Group	Allowed Capacitance	Allowed Inductance	L_0/R_0 Ratio
U_0 = 9V I_0 = 1 mA P_0 = 3 mW	Ex ia	IIB	40 µF	1 H	63 mH/Ω
	Ex ia	IIC	4.9 µF	1 H	15 mH/Ω

Input circuits (+ to -) for ch0 to ch7 and CJC circuits (+ to -) for CJC0 and CJC1 (terminals 0 to 3, 37, 39; 4 to 7, 37, 39; 8 to 11, 37, 39; 12 to 15, 37, 39; 17 to 20, 37, 39; 21 to 24, 37, 39; 25 to 28, 37, 39; 29 to 32, 37, 39; 0-3, 46, 48; 4 to 7, 46, 48; 8 to 11, 46, 48; 12 to 15, 46, 48; 17 to 20, 46, 48; 21 to 14, 46, 48; 25 to 28, 46, 48; 29 to 32, 46, 48)

	Protection	Group	Allowed Capacitance	Allowed Inductance	L_0/R_0 Ratio
U_0 = 9V I_0 = 38 mA P_0 = 86 mW	Ex ia	IIB	40 µF	80 mH	1.7 mH/Ω
	Ex ia	IIC	4.9 µF	20 mH	0.4 mH/Ω

UL, C-UL I/O Entity Parameters

Table 1

Wiring Method	Channel	Terminals	V_{oc} (V)	I_{sc} (mA)	V_t (V)	I_t (mA)	Groups	C_a (µF)	L_a (mH)
1 and 2	Any one channel (for example, ch0)	0(+), 1(H), 2(L), 3(-)	9.0	37.0	-	-	A, B	4.9	20.0
							C, E	14.7	80.0
							D, F, G	39.2	160.0
		37, 38, 39 (CJC0) or 46, 47, 48 (CJC1)	9.0	1.0	-	-	A, B	4.9	1000.0
							C, E	14.7	1000.0
							D, F, G	39.2	1000.0
		0(+), 1(H), 2(L), 3(-) 37, 38, 39 (CJC0) or 46, 47, 48 (CJC1)	-	-	9.0	38.0	A, B	4.9	20.0
							C, E	14.7	80.0
							D, F, G	39.2	160.0

Wiring Methods

- Wiring method 1 - Each channel is wired separately.
- Wiring method 2 - Multiple channels in one cable, providing each channel is separated in accordance with the National Electric Code (NEC) or Canadian Electric Code (CEC).

Table 2

Terminals	V_t (V)	I_t (mA)	Groups	C_a (µF)	L_a (µH)
Male Bus Connector	5.8	400	A-G	3.0	3.0

① The entity concept allows interconnection of intrinsically safe apparatus with associated apparatus not specifically examined in combination as a system when the approved values of V_t and I_t of the associated apparatus are less than or equal to V_{oc} and I_{sc} or V_{max} and I_{max} of the intrinsically safe apparatus and the approved values of C_a and L_a of the associated apparatus are greater than $C_i + C_{cable}$ and $L_i + L_{cable}$ respectively for the intrinsically safe apparatus.

② Simple apparatus is defined as a device which neither generates nor stores more than 1.2V, 0.1 A, 20 mJ, or 25 mW.

③ Wiring methods must be in accordance with the National Electric Code, ANSI/NFPA 70, Article 504 and 505 or the Canadian Electric Code CSA C22.1, Part 1, Appendix F. For additional information refer to ANSI/ISA RP12.6.

④ This module, 1797-IRT8, must be used with terminal base 1797-TB3 or 1797-TB3S.

⑤ Terminals 36 and 49 shall not be connected.

WARNING

Substitution of components may impair intrinsic safety.

AVERTISSEMENT

La substitution de composant peut compromettre la securite intrinseque.

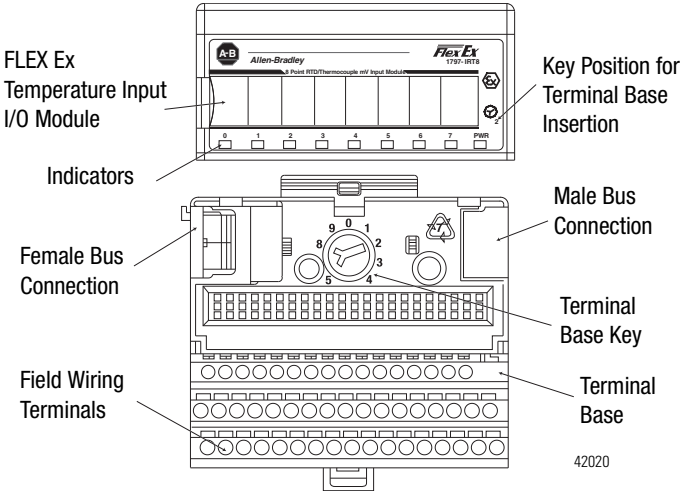

ATTENTION

A terminal base may or may not have an I/O module installed.

Hazardous (Classified) Location
Class I, Zones 0, 1, & 2 Groups IIC, IIB, IIA
Class I, Div. 1 & 2 Groups A, B, C, D
Class II, Div. 1 & 2 Groups E, F, G
Class III, Div. 1 & 2

Hazardous (Classified) Location
Class I, Zones 1 & 2 Groups IIC, IIB, IIA
Class I, Div. 1 & 2 Groups A, B, C, D

Any Simple Apparatus ② or I.S. device with Entity Concept parameters ① (V_{max}, I_{max}, C_i, L_i) appropriate for connection to associated apparatus with Entity Concept parameters listed in Table 1.

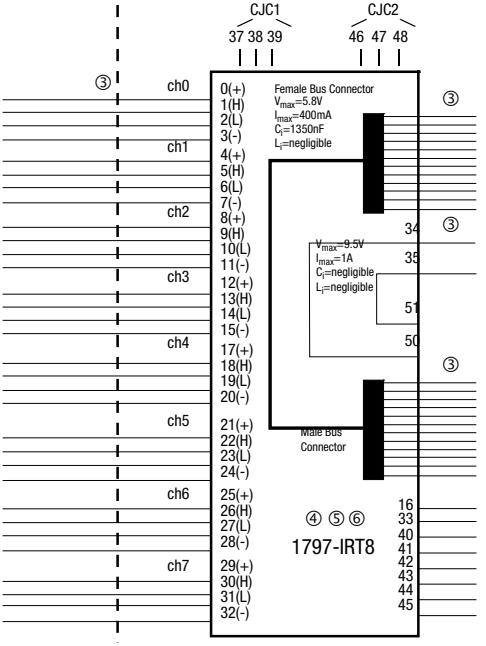

To any intrinsically safe device or associated apparatus with Entity Concept ① parameters of $V_{oc} \leq 5.8V$; $I_{sc} \leq 400$ mA.

To any intrinsically safe device or associated apparatus with Entity Concept ① parameters of $V_{oc} \leq 9.5V$; $I_{sc} \leq 1$ A.

To any IS device with Entity Concept ① parameters of (V_{max}, I_{max}, C_i, L_i) appropriate for connection to associated apparatus with Entity Concept parameters listed in Table 2.

Shield Connection Only

IMPORTANT For detailed certification information, refer to the FLEX Ex System Certification Reference Manual, publication 1797-RM001.

FM I/O Entity Parameters

If this product has the FM mark, it has been designed, evaluated, tested and certified to meet the following standards:

- FM C1. No 3600:1998, Electrical Equipment for Use in Hazardous (Classified) Locations General Requirements
- FM C1. No 3610:1999, Intrinsically Safe Apparatus and Associated Apparatus for Use in Class I, II, III Division 1 Hazardous (Classified) Locations
- FM C1. No 3615:1989, Explosionproof Electrical Equipment General Requirements
- FM C1. No 3810:1989, 1995, Electrical and Electronic Test, Measuring and Process Control Equipment
- ANSI/NEMA 250, 1991, Enclosures for Electrical Equipment

Wiring Methods

- Wiring method 1 - Each channel is wired separately.
- Wiring method 2 - Multiple channels in one cable, providing each channel is separated in accordance with the National Electric Code (NEC).

Table 1

Wiring Method	Channel	Terminals	V_{oc} (V)	I_{sc} (mA)	V_t (V)	I_t (mA)	Groups	C_a (μF)	L_a (mH)
1 and 2	Any one channel, for example, ch0	0(+), 1(H), 2(L), 3(-)	9.0	37.0	-	-	A, B	3.0	20.0
							C, E	9.0	60.0
							D, F, G	24.0	160.0
		37, 38, 39 (CJC0) or 46, 47, 48 (CJC1)	9.0	1.0	-	-	A, B	3.0	1000.0
							C, E	9.0	1000.0
							D, F, G	24.0	1000.0
		0(+), 1(H), 2(L), 3(-) 37, 38, 39 (CJC0) or 46, 47, 48 (CJC1)	-	-	9.0	38.0	A, B	3.0	20.0
							C, E	9.0	60.0
							D, F, G	24.0	160.0

Table 2

Terminals	V_t (V)	I_t (mA)	Groups	C_a (μF)	L_a (μH)
Male Bus Connector	5.8	400	A-G	3.0	3.0

① The entity concept allows interconnection of intrinsically safe apparatus with associated apparatus not specifically examined in combination as a system when the approved values of V_{oc} and I_{sc} or V_t and I_t of the associated apparatus are less than or equal to V_{max} and I_{max} of the intrinsically safe apparatus and the approved values of C_a and L_a of the associated apparatus are greater than $C_i + C_{cable}$ and $L_i + L_{cable}$ respectively for the intrinsically safe apparatus. The internal capacitances Ci of the terminal base must be taken into account to verify the intrinsic safety.

② Simple apparatus is defined as a device which neither generates nor stores more than 1.2V, 0.1 A, 20 μJ, or 25 mW.

③ Wiring methods must be in accordance with the National Electric Code, ANSI/NFPA 70, Article 504 and 505. For additional information refer to ANSI/ISA RP12.6.

④ This module, 1797-IRT8, must be used with terminal base 1797-TB3 or 1797-TB3S.

⑤ Terminals 36 and 49 shall not be connected.

⑥

WARNING Substitution of components may impair intrinsic safety.

AVERTISSEMENT La substitution de composant peut compromettre la securite intrinseque.

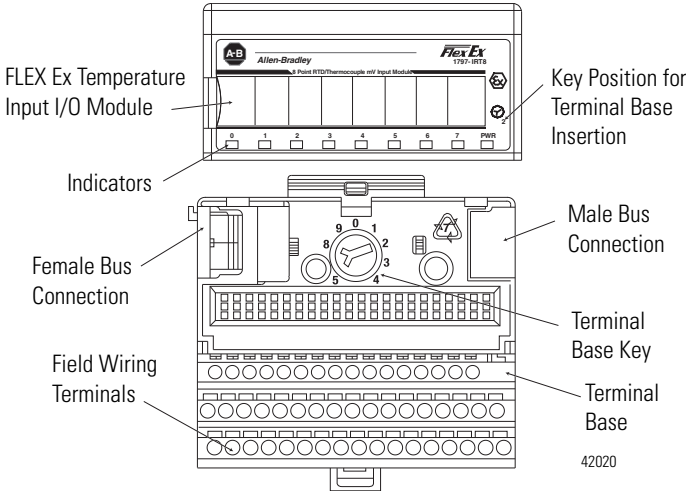

ATTENTION

A terminal base may or may not have an I/O module installed.

Hazardous (Classified) Location
Class I, Zone 0 Group IIC
Class I, Div. 1 Groups A, B, C, D
Class II, Div. 1 Groups E, F, G
Class III, Div. 1

Hazardous (Classified) Location
Class I, Zone 1 Group IIC
Class I, Div. 1 Groups A, B, C, D

Any Simple Apparatus ② or FM approved device with Entity Concept parameters ① (V_{max}, I_{max}, C_i, L_i) appropriate for connection to associated apparatus with Entity Concept parameters listed in Table 1.

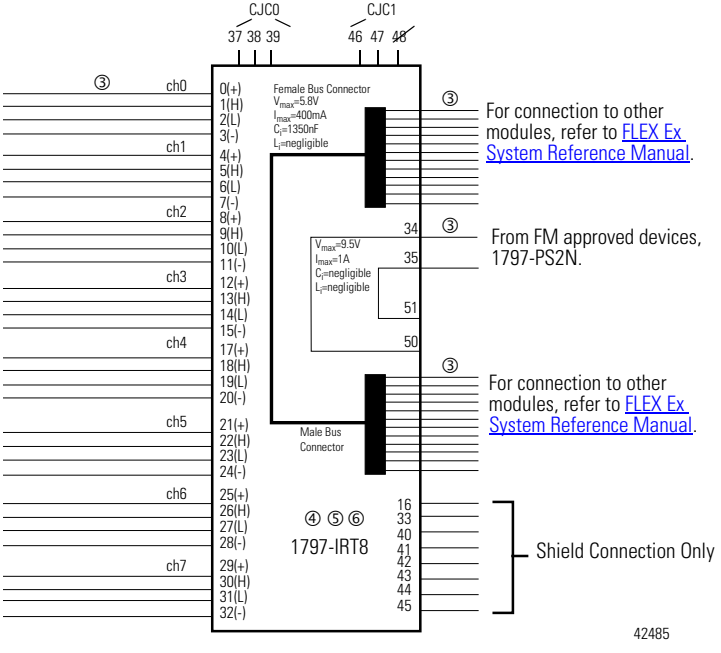

WARNING Avoid electrostatic charging.
ADVERTÊNCIA! PREVENIR CONTRA OACÚMULO DE CARGA ELETROSTÁTICA.

FLEX Ex is a trademark of Rockwell Automation, Inc.

Notes:

Notes:

Notes:

Rockwell Automation Support

Rockwell Automation provides technical information on the Web to assist you in using its products. At http://support.rockwellautomation.com, you can find technical manuals, a knowledge base of FAQs, technical and application notes, sample code and links to software service packs, and a MySupport feature that you can customize to make the best use of these tools.

For an additional level of technical phone support for installation, configuration, and troubleshooting, we offer TechConnect Support programs. For more information, contact your local distributor or Rockwell Automation representative, or visit http://support.rockwellautomation.com.

Installation Assistance

If you experience a problem with a hardware module within the first 24 hours of installation, please review the information that's contained in this manual. You can also contact a special Customer Support number for initial help in getting your module up and running.

United States	1.440.646.3434 Monday – Friday, 8am – 5pm EST
Outside United States	Please contact your local Rockwell Automation representative for any technical support issues.

New Product Satisfaction Return

Rockwell tests all of its products to ensure that they are fully operational when shipped from the manufacturing facility. However, if your product is not functioning, it may need to be returned.

United States	Contact your distributor. You must provide a Customer Support case number (see phone number above to obtain one) to your distributor in order to complete the return process.
Outside United States	Please contact your local Rockwell Automation representative for return procedure.

Allen-Bradley, Rockwell Automation, ControlLogix, RSLinx, TechConnect, and FLEX I/O are trademarks of Rockwell Automation, Inc.
Trademarks not belonging to Rockwell Automation are property of their respective companies.

Rockwell Automation maintains current product environmental information on its website at http://www.rockwellautomation.com/rockwellautomation/about-us/sustainability-ethics/product-environmental-compliance.page.

www.rockwellautomation.com

Power, Control and Information Solutions Headquarters

Americas: Rockwell Automation, 1201 South Second Street, Milwaukee, WI 53204-2496 USA, Tel: (1) 414.382.2000, Fax: (1) 414.382.4444
Europe/Middle East/Africa: Rockwell Automation NV, Pegasus Park, De Kleetlaan 12a, 1831 Diegem, Belgium, Tel: (32) 2 663 0600, Fax: (32) 2 663 0640
Asia Pacific: Rockwell Automation, Level 14, Core F, Cyberport 3, 100 Cyberport Road, Hong Kong, Tel: (852) 2887 4788, Fax: (852) 2508 1846

Publication 1797-IN004G-EN-P - August 2017 PN-455782

Supersedes Publication 1797-IN004F-EN-P - June 2010
Copyright © 2017 Rockwell Automation, Inc. All rights reserved. Printed in the U.S.A.