Technical Data

Allen-Bradley

E3 and E3 Plus Overload Relay Specifications

Bulletin Number 193, 592

Topic	Page
Product Overview	2
Standards Compliance and Certifications	2
Features	3
Catalog Number Explanation	6
General Specifications	6
Trip Curves	11
Wiring Diagrams	12
Approximate Dimensions	14

Additional Resources

These documents contain additional information concerning related products from Rockwell Automation.

Resource	Description
Industrial Automation Wiring and Grounding Guidelines, publication 1770-4.1	Provides general guidelines for installing a Rockwell Automation industrial system.
Product Certifications website, http://www.ab.com	Provides declarations of conformity, certificates, and other certification details.

You can view or download publications at http://www.rockwellautomation.com/literature/. To order paper copies of technical documentation, contact your local Allen-Bradley distributor or Rockwell Automation sales representative.

Bulletin	**193-EC1**	**193-EC2/EC3**	**193-EC5**	**193-EC4**
Type	E3 Electronic Overload Relay	E3 Plus Electronic Overload Relay		E3 Plus Current Monitoring Relay
Rated Current (Range)	0.4…5000 A			
NEMA Operating Voltage, Nominal	600V			
IEC Operating Voltage, Nominal	690/1000V			
Overload Type	Microprocessor-Based			
Trip Class (Fixed)	—			
Trip Class (Adjustable)	5…30			—
Ambient Temperature Compensated	✓			—
Reset Type	Automatic and Manual			
Adjustment Range	5:1			
Phase Loss	Adjustable Delay			—
Ground (Earth) Fault	—	Sensitive	Sensitive	Sensitive
Overcurrent (Jam) Detection	✓	✓	✓	—
Stall Detection	✓	✓	✓	—
Underload Detection	✓	✓	✓	—
Current Imbalance	✓	✓	✓	—
PTC Thermistor Monitoring	—	✓	—	—
Warning Settings	✓	✓	✓	✓
N.C. Trip Contact	✓	✓	✓	✓
N.O. Alarm Contact	—	—	—	—
No. of Outputs	1	2	2	2
No. of Inputs	2	4	6	4
ODVA (DeviceNet) Conformance	✓	✓	✓	✓
Variable Frequency Drive (VFD) Compatible	✓	✓	✓	✓

Standards Compliance

EN 60947-4-1
CSA C22.2 No. 14
UL 508, UL1053 (class 1)

Certifications

ABS
CE
cULus Listed (File No. E14840, Guide NKCR, NKCR7; File No. E53935, Guide KDAX)
C-tick
CCC

The E3 Overload Relay is available in two configurations: the E3 and E3 Plus. The following table illustrates the functional differences between the two configurations.

Feature	E3	EC Plus			
	193/592-EC1	193/592-EC2	193/592-EC3	193-EC4	193/592-EC5‡
Inputs★	2	4	4	4	6
Outputs	1	2	2	2	2
PTC Thermistor Input		✓	✓		
Ground Fault Protection		Internal 1…5 A	External 20 mA… 5 A§	External 20 mA… 5 A§	External 20 mA… 5 A§
DeviceLogix		✓	✓	✓	✓
Heat Trace				✓	
Voltage Monitoring					✓

★ Inputs are rated 24V DC.
‡ Voltage sensing range is 43…65 Hz
§ Requires the use of an external ground fault sensor, Cat. No. 193-CBCT_.

Thermal Overload

Thermal Utilization

The E3 Overload Relay provides overload protection through true RMS current measurement of the individual phase currents of the connected motor. Based on this information, a thermal model that simulates the actual heating of the motor is calculated. Percent of thermal capacity utilization (%TCU) reports this calculated value and can be read via the DeviceNet network. An overload trip occurs when the value reaches 100%.

Adjustable Settings

Thermal overload protection setup is accomplished simply by programming the motor's full load current (FLC) rating and the desired trip class (5…30). Programming of the actual values through software programming ensures the accuracy of the protection.

Thermal Memory

The E3 Overload Relay includes a thermal memory circuit designed to approximate the thermal decay for a trip class 30 setting. This means that the thermal model of the connected motor is maintained at all times, even if the supply power is removed.

Reset Modes

This flexibility allows the end-user in the ability to select between manual and automatic reset for an overload trip, allowing for broad application. The point of reset is user adjustable from 1…100% TCU.

Time to Trip

During an overload condition, the E3 Overload Relay provides an estimated time to trip that is accessible via the DeviceNet network. This allows corrective action to be taken so that production may continue uninterrupted.

Time to Reset

Following an overload trip, the E3 Overload Relay will not reset until the calculated percentage of thermal capacity utilization falls below the reset level. As this value decays, the time to reset, which is accessible via the DeviceNet network, is reported.

Thermal Warning

The E3 Overload Relay provides the capability to alert in the event of an impending overload trip. A thermal warning bit is set in the Warning Status when the calculated percentage of thermal capacity utilization exceeds the programmed thermal warning level, which has a setting range of 0…100% TCU.

Two-Speed Protection

The E3 Plus Overload Relay offers a second FLA setting for 2-speed motor protection. What used to require two separate overload relays - one for each set of motor windings - can now be accomplished with one device. Improved protection is delivered as thermal utilization is maintained in one device during operation in both speeds.

Phase Loss

The E3 Overload Relay offers configurable phase loss protection, allowing the installer to enable or disable the function plus set a time delay setting, adjustable from 0.1…25.0 seconds. The trip level is factory-set at a current imbalance measurement of 100%.

Ground (Earth) Fault

The E3 Plus Overload Relay incorporates zero sequence (core balance) sensing into its design through the 90 A rating for low level (arcing) ground fault detection. Trip and warning settings are adjustable from 20 mA…5.0 A. For devices rated greater than 90 A and for ground fault detection less than 1.0 A, the external core balance current transformer accessory is required. Class I protection is provided as defined by UL1053. Series B or later devices provide a trip-inhibit setting, offering flexibility to prevent tripping when the ground fault current magnitude exceeds 10 A. This can be useful to guard against the opening of the controller when the fault current could potentially exceed the controller's interrupting capacity rating.

Note: The E3 Plus Overload Relay is **not** a Ground Fault Circuit Interrupter for personnel protection as defined in article 100 of the U.S. National Electric Code.

Stall

"Stall" is defined as a condition where the motor is not able to reach full-speed operation in the appropriate amount of time required by the application. This can result in motor overheating as current draw is in excess of the motor's full load current rating.

The E3 Overload Relay provides user-adjustable stall protection. The trip setting has a range of 100…600% FLA, and the enable time is adjustable up to 250 seconds.

Jam (Overcurrent)

The E3 Overload Relay can respond quickly to take a motor off-line in the event of a mechanical jam, thereby reducing the potential for damage to the motor and the power transmission components. Trip adjustments include a trip setting adjustable from 50…600% FLA and a trip delay time with a range of 0.1…25.0 seconds. A separate warning setting is adjustable from 50…600% FLA.

Underload (Undercurrent)

A sudden drop in motor current can signal conditions such as:

- Pump cavitation
- Tool breakage
- Belt breakage

For these instances, rapid fault detection can help minimize damage and aid in reducing production downtime.

Additionally, monitoring for an underload event can provide enhanced protection for motors that are coded by the medium handled (e.g., submersible pumps that pump water). Such motors can become overheated despite being underloaded. This can result from an absence or an insufficient amount of the medium (due to clogged filters, closed valves, etc.).

The E3 Overload Relay offers underload trip and warning settings adjustable from 10…100% FLA. The trip function also includes a trip delay time with a range of 0.1…25.0 seconds.

Over-temperature Protection

The E3 Plus Overload Relay provides motor over-temperature protection with the added provisions for terminating and monitoring of stator windingembedded positive temperature coefficient (PTC) thermistors. PTC thermistors are semiconductors that exhibit a large increase in resistance when the rated response temperature is exceeded. When the monitored PTC thermistor resistance exceeds the response level of the E3 Plus Overload Relay (3400 Ω), it can be set to trip immediately or programmed to set the PTC bit of the Warning Status word.

Current Imbalance (Asymmetry)

The E3 Plus Overload Relay offers current imbalance trip and warning settings adjustable from 10…100%. The trip function also includes a trip delay time with a range of 0.1…25.0 seconds.

Remote Trip

The remote trip function allows an external device (e.g., a vibration sensor) to induce the E3 Overload Relay to trip. External device relay contacts are wired to the E3 Overload Relay discrete inputs. These discrete inputs are configurable with an option for assigning the remote trip function.

Current Monitoring Functions

The E3 Overload Relay allows the user to monitor the following operational data over the DeviceNet network:

- Individual phase currents — in amperes
- Individual phase currents — as a percentage of motor FLC
- Average current — in amperes
- Average current — as a percentage of motor FLC
- Percentage of thermal capacity utilized
- Current imbalance percentage
- Ground fault current (E3 Plus)

Diagnostic Functions

The E3 Overload Relay allows the user to monitor the following diagnostic information over the DeviceNet network:

- Device status
- Trip status
- Warning status
- Time to an overload trip
- Time to reset after an overload trip
- History of past five trips
- History of positive warnings
- Hours of operation
- Number of starts
- Trip snapshot

Status Indicators

The E3 Overload Relay provides the following LED indicators:

- **Network Status —** This green/red LED indicates the status of the network connection.
- **TRIP/WARN —** This LED flashes an amber code under a warning condition and a red code when tripped.
- **OUT A & B —** These amber LEDs illuminate when the output contacts are commanded closed.
- **IN 1 - 4 —** These amber LEDs illuminate when the user-connected device contact is closed.:
  Note: IN3 and 4 and OUT B are available only on the E3 Plus Overload Relay.

Inputs/Outputs

Inputs allow the connection of such devices as contactor and disconnect auxiliary contacts, pilot devices, limit switches, and float switches. Input status can be monitored via the network and mapped to a controller's input image table. Inputs are rated 24V DC and are current sinking. Power for the inputs is sourced from the DeviceNet network connection with convenient customer terminations at control terminals 5 and 6. Relay contact outputs can be controlled via the network or DeviceLogix function blocks for performing such tasks as contactor operation.

Test/Reset Button

The Test/Reset button, located on the front of the E3 Overload Relay, allows the user to perform the following:

- **Test** — The trip relay contact will open if the E3 Overload Relay is in an untripped condition and the Test/Reset button is pressed for 2 seconds or longer.
- **Reset —** The trip relay contact will close if the E3 Overload Relay is in a tripped condition, supply voltage is present, and the Test/Reset button is pressed.

Single/Three-Phase Operation

The E3 Overload Relay can be applied to three-phase as well as single-phase applications. A programming parameter is provided for selection between single- and three-phase operation. Straight-through wiring is afforded in both cases.

DeviceNet Communications

The E3 Overload Relay is a Group 2 "slave only" device and supports the following:

- Unconnected Message Manager (UCMM) messages
- Polled I/O messaging
- Change-of-state/cyclic messaging
- Explicit messaging
- Group 4 — Off-line node recovery messaging
- Full parameter object support
- Auto-baud network rate identification
- Configuration consistency value

For more information on operation and maintenance of this product, please reference the user manual, publication 193-UM002*.

DeviceLogix

The E3 Plus offers increased control flexibility with DeviceLogix capabilities. Using RSNetWorx for DeviceNet (version 3.0 or later), function block programs can be configured and saved to an E3 Plus Overload Relay to operate single logic routines. The function blocks are programmed using standard Boolean operators (e.g., AND, OR, XOR, and NOT) and plus timers, counters, and latches. In addition to allowing the use of the integral discrete inputs, protection functions can also be used as inputs to trigger outputs. For example, the Ground Fault Protection function could be used to control Output A of the E3 Plus Overload Relay for operation of a circuit breaker short-trip mechanism.

AC Input Interface Module Accessory

The AC Input Interface Module conveniently allows the E3 Overload Relay to be retrofitted or applied in new applications that require 110/120V AC control circuitry. This new accessory simply plugs into the E3 Overload Relay's existing input terminals, optimizing panel space utilization. The module accepts termination of up to four external devices, making it compatible with the E3 and E3 Plus versions of the E3 overload relay. Optical isolation is provided between the AC input wiring and the internal 24V circuitry of the E3.

Voltage Protection (model EC5 only)

The E3 Plus model EC5 will provide the user with enhanced current-based motor protection just like the E3 Plus model, EC3, with the addition of voltage protection. With this product, users can protect against voltage issues e.g., undervoltage, voltage unbalance, phase loss, frequency, and phase rotation) before the contactor coil is energized.

Power Protection (model EC5 only)

While the motor is powering a load, the E3 Plus model, EC5, will also protect the motor based on power. This product will monitor and protect for excessive real power (kW), reactive power (kVAR), apparent power (kVA), and power factor for a specific application (e.g., pump applications).

Motor Energy Consumption (model EC5 only)

The E3 Plus model, EC5, can be included in a company's energy management system. This product will provide voltage, current, power (kW, kVAR, and kVA), energy (kWh, kVARh, kVAh, kW Demand, kVAR Demand, and kVA Demand), and power quality (power factor, frequency, and phase rotation) information down at the motor level.

Communications Accessories

CopyCat™

- Used to upload, store, and download device configurations and DeviceLogix™ programs for DeviceNet devices via your network
- User can easily replace and reconfigure scan lists of DeviceNet scanners (minus the Automatic Device Replacement configuration)
- Parameters can be accessed as either groups or as a numbered list of all parameters, and can be monitored and edited

DeviceNet™ Configuration Terminal (for use with E1 Plus overload relays, E3 and E3 Plus overload relays, ArmorStart® distributed motor controllers, and Bulletin 825-P modular protection systems)

The DeviceNet Configuration Terminal (**Cat. No. 193-DNCT**) is a handheld device that can be used to commission, configure, program, and monitor devices on your DeviceNet network. The 193-DNCT allows you to increase productivity and ease troubleshooting with easy access to information and diagnostics of your system. The 193-DNCT can be used with any DeviceNet devices and has DeviceLogix, metering, graphing, and auto-display capabilities. These capabilities can help ease troubleshooting by commissioning devices online through your network.

Network Who

- Terminal searches for all devices on the network and provides device address, device name, and status of a device.
- Used to upload, store, and download device configurations and DeviceLogix™ programs for DeviceNet devices via your network
- User can easily replace and reconfigure scan lists of DeviceNet scanners (minus the Automatic Device Replacement configuration)
- Parameters can be accessed as either groups or as a numbered list of all parameters, and can be monitored and edited

Diagnostics

- Simplifies troubleshooting
- Can present DeviceNet diagnostics, network utilization, and make network statistics available to include baud rate, bus voltage, percentage of bus loading, and CAN errors

DeviceLogix

- Terminal allows the user to enable, monitor, edit, or delete DeviceLogix programs.

Parameter Monitoring and Editing

- If the selected device supports the full parameter object, parameters can be accessed as either groups or as a numbered list of all parameters
- Parameter screen displays all information for a single parameter
- Values can be monitored, edited, or copied from the parameter screen

EtherNet/IP Communication Auxiliary (for use with E3 and E3 Plus overload relays and Bulletin 825-P modular protection systems)

The EtherNet/IP Communications Auxiliary (**Cat. Nos. 193-DNENCAT and -DNENCATR**) allows users of DeviceNet-based intelligent electronic overload relays to seamlessly communicate on an EtherNet/IP network without the need for using RSNetWorx for DeviceNet for network configuration. The communication auxiliary acts as a linking device to pass through EtherNet-based CIP explicit and I/O messages to the DeviceNet-based devices. Upon a configuration request, the communication auxiliary polls the DeviceNet network for the first 6 devices. For devices that support the full parameter object, parameters will be made available through an internal Web page for the user to view real-time information and configure each device when the user has the appropriate security privileges.

- Users will be able to view and configure parameters using a text file via the internal web page
- Allows users to read information into the programmable logic or automation controller
- Allows users to use RSLinx Classic or RSLinx Enterprise to serve device Parameters via Microsoft OPC (OLE, Object Linked Element, for Process Control) to SCADA systems and/or historical data collection systems such as FactoryTalk View, FactoryTalk Historian, and RSEnergyMetrix
- Option to allow users to connect to a DLR (Device Level Ring) network topology
  - allows the network to choose another physical communication path in the event that the physical link between two EtherNet devices is broken.
- ADR (Automatic Device Replacement) capabilities
  - the ADR recognizes when one of the six DeviceNet-based devices has been replaced with a new device, and it will automatically download the previous configuration parameters and node address to the new replacement device

Catalog Number Explanation

193 –	EC1	B	B
	a	*b*	*c*

a

Type	
Code	Description
EC1	E3
EC2	E3 Plus with internal ground fault sensor
EC3	E3 Plus with external ground fault sensor
EC4	E3 Plus current monitor relay with external ground fault sensor
EC5♦	E3 Plus with voltage monitoring

b

Adjustment Rating [A]	
Code	Description
P	0.4…2.0
A	1…5
B	3…15
C	5…25
D	9…45
E	18…90
F	28…140
G	42…210
H	60…302
J	84…420
K	125…630
L	172…860
Z	9…5000

c

Bulletin 100 Contactor Size	
Code	Description
B	C09…C23
D	C30…C43
E	C60…C85
F	D95…D180
G	D210…D420
H	D630…D860
Z	Panel mount★

★ Only available for Cat. Nos. 193-EC1ZZ, 193-EC3ZZ, and 193-EC4ZZ. For all other cat. nos., order Cat. No. 193-ECPM_ separately.

♦ Voltage input module and ribbon cable are included with Cat. No. 193-EC5.

CT Ratio to FLA Setting Range Correlation

CT Ratio	FLA Setting Range (A)	CT Ratio	FLA Setting Range (A)	CT Ratio	FLA Setting Range (A)
50:5	9…45	300:5	60…302	1200:5	240…1215
100:5	18…90	500:5	84…420	2500:5	450…2250
150:5	28…140	600:5	125…630	5000:5	1000…5000
200:5	42…210	800:5	172…860	—	—

3-Pole Terminal Blocks

Cat. No. 100-DTB180	Cat. No. 100-DTB420
(A) 6…1/0 AWG, 16…50 mm^2 B) 6 AWG…250 MCM, 16…120 mm^2 90…110 lb•in, 10…12 N•m	(2) 4 AWG…600 MCM, 25…240 mm^2 180…220 lb•in, 20…25 N•m

Terminal Lug Kits

Cat. No. 100-DL110	Cat. No. 100-DL180	Cat. No. 100-DL420	Cat. No. 100-DL630	Cat. No. 100-DL860
Lug: 6…2/0 AWG, 16…70 mm^2 90…110 lb•in, 10…12 N•m Terminal: 13/32 in, 10 mm 150 lb•in, 17 N•m	Lug: 6 AWG…250 MCM, 16…120 mm^2 90…110 lb•in, 10…12 N•m Terminal: 1/2 in, 13 mm 275 lb•in, 16 N•m	Lug: 2 AWG…350 MCM, 375 lb•in, 42 N•m Terminal: 11/16 in, 17 mm 140 lb•in, 16 N•m	Lug: 2/0 AWG…500 MCM, 70…240 mm^2 400 lb•in, 45 N•m Terminal: 3/4 in, 19 mm 600 lb•in, 68 N•m	Lug: 2/0 AWG…500 MCM, 70…240 mm2 400 lb•in, 45 N•m Terminal: 3/4 in, 19 mm 600 lb•in, 68 N•m

Maximum Heat Dissipation (Watts)

	Cat. No. 193-EC_B, 193-EC_D	Cat. No. 193-EC_E	Cat. No. 193-EC_F	Cat. No. 193-EC_G	Cat. No. 193-EC_H
E3	3.83	4.43	10.67	22.52	35.36
E3 Plus	4.53	5.13	11.37	23.22	36.06

Main Circuits

	Cat. No. 193-EC_B, 193-EC_D, 193-EC_Z, 592-EC_T, 592-EC_C	Cat. No. 193-EC_E, 592-EC_D	Cat. No. 193-EC_F	Cat. No. 193-EC_G	Cat. No. 193-EC_H
Rated Insulation Voltage (U_i)	690V AC		1000V AC		
Rated Impulse Strength (U_{imp})	6 kV AC		6 kV AC		
Rated Operating Voltage (U_e) IEC/UL	690V AC/600V AC		1000V AC/600V AC		
Rated Frequency	20…250 Hz		50/60 Hz		
Terminal Cross-Sections			—	—	—
Terminal Type Terminal Screws	M5	M8			
Flexible-Stranded with Ferrule Single Conductor Torque	2.5…16 mm^2 2.5 N•m	4…35 mm^2 4 N•m			
Flexible-Stranded with Ferrule Multiple Conductor Torque	6…10 mm^2 3.4 N•m	4…25 mm^2 4 N•m			
Coarse-Stranded/Solid Single Conductor Torque	2.5…25 mm^2 2.5 N•m	4…50 mm^2 4 N•m			
Coarse-Stranded/Solid Multiple Conductor Torque	6…16 mm^2 3.4 N•m	4…35 mm^2 4 N•m			
Stranded/Solid– Single Conductor Torque	#14…6 AWG 22 lb•in	#12…1 AWG 35 lb•in			
Stranded/Solid Multiple Conductor Torque	#10…6 AWG 30 lb•in	#6…2 AWG 35 lb•in			
Pozidriv Screwdriver Size	2	—			
Slotted Screwdriver (mm)	1 x 6	—			
Hexagon Socket Size SW (mm)	—	4			

Control Circuits

Power Supply Ratings	
Rated Supply Voltage (U_s)	24V DC (supply via DeviceNet connection)
Operating Range	11…25V DC
Power Consumption	
E3	3.2 W
E3 Plus	3.9 W
Output Relay Ratings	
Type of Contacts	Form A SPDT–NO
Rated Insulation Voltage (U_i)	300V AC
Rated Operating Voltage (U_e)	250V AC
Rated Operating Current (I_e)	5 A
Minimum Operating Current	10 mA @ 5V DC
Switching Capacity	B300 AC-15
Resistive Load Rating (p.f. = 1.0)	5 A, 250V AC/5 A, 30V DC
Inductive Load Rating (p.f. = 0.4) (L/R = 7 ms)	2 A, 250V AC/2 A, 30V DC
Input Ratings	
Supply Voltage	24V DC ± 10% (provided by E3)
Input Type	Current Sinking
Thermistor/PTC Input Ratings	
Type of Control Unit	Mark A
Max. No. of Sensors in Series	6
Max. Cold Resistance of PTC Sensor Chain	1500 Ω
Trip Resistance	3400 Ω ± 150 Ω
Reset Resistance	1600 Ω ± 100 Ω
Short-Circuit Trip Resistance	25 Ω ± 10 Ω

Thermistor/PTC Input Ratings, Continued	
Max. Voltage @ PTC Terminals (R_{PTC} = 4 kΩ)	7.5V DC
Max. Voltage @ PTC Terminals (R_{PTC} = open)	30V DC
Response Time	500 ms
Sensor Characteristic	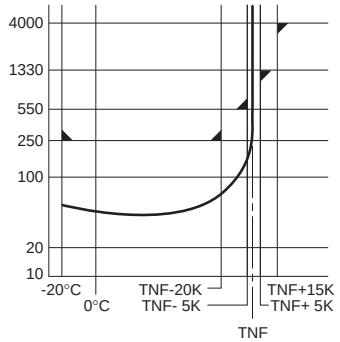 ***Per IEC 34-11-2***

UL Short-Circuit Ratings

Cat. No.	Maximum Available Fault Current [A]	Maximum Voltage [V]
193-EC_B, 592-EC_T	5 000	600
193-EC_D, 592-EC_C	5 000	600
193-EC_E, 592-EC_D	10 000	600
193-EC_F	10 000	600
193-EC_G	18 000	600
193-EC_H	42 000	600
193-EC_Z	5 000	600

IEC Short-Circuit Ratings

Cat. No.	Maximum Available High Fault Current [A]	Maximum Voltage [V]
193-EC_B, 592-EC_T	100,000	690
193-EC_D, 592-EC_C	100,000	690
193-EC_E, 592-EC_D	100,000	690
193-EC_F	100,000	1000
193-EC_G	100,000	1000
193-EC_H	100,000	1000
193-EC_Z	100,000	690

Control and DeviceNet Terminal Cross-Sections	
Terminal Screws	M3
Flexible-Stranded with Ferrule – Single Conductor Torque	0.25…2.5 mm^2 0.55 N•m
Flexible-Stranded with Ferrule – Multiple Conductor Torque	0.5…0.75 mm^2 0.55 N•m
Coarse-Stranded/Solid–Single Conductor Torque	0.2…4.0 mm^2 0.55 N•m
Coarse-Stranded/Solid–Multiple Conductor Torque	0.2…1.5 mm^2 0.55 N•m
Stranded/Solid–Single Conductor Torque	24…12 AWG 5 lb•in
Stranded/Solid–Multiple Conductor Torque	24…16 AWG 5 lb•in
Slotted Screwdriver (mm)	0.6 x 3.5

Electromagnetic Compatibility Ratings

Electrostatic Discharge Immunity Test Level	8kV Air Discharge, 6kV Contact Discharge
Performance Criteria	A ‡
RF Immunity Test Level	10V/m
Performance Criteria	A ‡
Electrical Fast Transient/Burst Immunity Test Level	4kV (Power), 2kV (Control & Comm)
Performance Criteria	A ‡
Surge Immunity Test Level	2kV (L-E), 1kV (L-L)
Performance Criteria	A ‡
Radiated Emissions	Class A
Conducted Emissions	Class A

‡ Performance Criteria A requires the device under test (DUT) to experience no degradation or loss of performance.

Environmental Ratings

Ambient Temperature Storage Operating	 -40…+85 °C (-40…+185 °F) -20…+55 °C (-4…+131 °F)
Humidity Operating Damp Heat – Steady-State (per IEC 68-2-3) Damp Heat – Cyclic (per IEC 68-2-30)	 5…95% Non-condensing 92% r.h., 40 °C(104 °F), 56 days 93% r.h., 25 °C/40 °C(77 °F/104 °F), 21 cycles
Vibration (per IEC 68-2-6)	3 G
Shock (per IEC 68-2-27)	30 G
Pollution Environment	Degree 2
Degree of Protection 193-ECxxx 592-ECxxx	 1P1X 1P0

Current Reporting Accuracy

Phase Currents: 100% min. FLA Setting Value … 720% max. FLA Setting Value 50%…100% min FLA Setting Value	 +/- 5% +/- 10%
Ground Current (0.5…9.0 A)	+/- 10%

External Current Transformers (for use with Cat. Nos. 193-EC1ZZ1, 193-EC3ZZ, 193-EC4ZZ, and 193-EC5ZZ)

The user shall provide one current transformer (CT) for each motor phase,and shall connect the CT's secondary leads to the appropriate E3 overload relay power terminals, as shown in current transformer's wiring diagrams. The CT shall have the appropriate ratio (refer to the product nameplate or product description). Additionally, the CT shall be selected to be capable of providing the required VA to the secondary load, which includes the E3 overload relay burden of 0.1 VA at the rated secondary current and the wiring burden. Finally, the CT shall be rated for protective relaying to accomodate the high inrush currents associated with motor startup, and shall have an accuracy of <±2% over its normal operating range. Typical CT ratings include (Instrument Transformers, Inc. — Model #23 or equivalent):

ANSI (USA)	**Class C5B0.1**
CSA (Canada)	**Class 10L5**
IEC (Europe)	**5 VA Class 5P10**

General

	Cat. No. 193-EC_B, 193-EC_D, 193-EC_Z	Cat. No. 193-EC_E	Cat. No. 193-EC_F	Cat. No. 193-EC_G	Cat. No. 193-EC_H
Approximate Weights	0.80 kg (1.77 lb)	1.23 kg (2.71 lb)	2.95 kg (6.5 lb)	4.43 kg (9.75 lb)	8.63 kg (19.0 lb)
Standards	CSA C22.2 No.14, DIN VDE 0660, EN 60 947, UL 508, UL 1053				
Certifications	CE, C-tick, cUL, CCC (pending)				

Protection and Warning Summary

Protective Function	Trip Enable	Warning Enable	Trip Level Settings		Trip Delay Settings		Warning Level Settings		Inhibit Time Settings‡	
	Factory Default	Factory Default	Range	Default	Range [s]	Default [s]	Range	Default	Range [s]	Default [s]
Thermal Overload	Enabled	Disabled	0.4…5000 A	—	Trip Class 5…30	Trip Class 10	0…100 %TCU	85%	—	—
Phase Loss	Enabled	—	§	§	0.1…25.0	1.0	—	—	0…250	0
Ground (Earth) Fault	Disabled	Disabled	1.0…5.0 A	2.5 A	0.1…25.0	0.5	1.0…5.0 A	2.0 A	0…250	10
Stall (High Overload During Start)	Disabled	—	100…600 % FLA ♣	600 % FLA ♣	0…250 ♣	10♣	—	—	—	—
Jam (High Overload During Run)	Disabled	Disabled	50…600 % FLA	250 % FLA	0.1…25.0	5.0	50…600 % FLA	150 % FLA	0…250	10
Underload	Disabled	Disabled	10…100 % FLA	50 % FLA	0.1…25.0	5.0	10…100 % FLA	70 % FLA	0…250	10
PTC	Disabled	Disabled	—	—	—	—	—	—	—	—
Current Imbalance (Asymmetry)	Disabled	Disabled	10…100%	35%	0.1…25.0	5.0	10…100%	20%	0…250	10
Comm Fault	Enabled	Disabled	—	—	—	—	—	—	—	—
Comm Idle	Disabled	Disabled	—	—	—	—	—	—	—	—

♣ Inhibit time settings are used for both trip and warning functions.
§ Phase loss trip level is set at a current imbalance greater than or equal to 100% and is not user adjustable.
‡ Stall protection is only applicable to the motor starting sequence.

Programming and Control Terminal

Display	
Display type	128x64 LCD with yellow-green backlighting
Viewing area	57 x 30 mm (2.24 x 1.18 in.)
Keypad	
Keypad type	Tactile embossed, domed keys, sealed membrane
Operation force	453 g (16 oz.)
Operational life	1 million operations
Communications	
Communication protocol	DeviceNet™ (125, 250, 500 Kbaud selectable)
Electrical	
Input voltage range	11…25V DC
Input power, typical	1.7 W
Input current	70 mA @ 24V DC
Environmental	
Operating temperature	0…50 °C (32…122 °F)
Storage temperature	-40…+85 °C (-40…+185 °F)
Humidity	5…95%, non-condensing
Operating shock	30 g
Non-operating shock	50 g
Operating vibration	2.5 g @ 5 Hz…2 kHz
Non-operating vibration	5 g @ 5 Hz…2 kHz
Dimensions	
Height	116 mm (4.57in.)
Width	70 mm (2.76 in.)
Depth	15.5 mm (0.67 in.)
Weight	85 g (3 oz.)
Certifications	
cULus	UL 508, C22.2, No. 14
CE	EN61000-6-2:2005 EN61000-6-4:2001
RoHS	This product meets the material restrictions of the European Union RoHS Directive

AC Input Interface Module

Electrical	
Number of inputs	4
Voltage category	110/120V AC
Operating voltage range	79…132V AC
Frequency range	47…63 Hz
Off-state voltage (max.)	20V AC
On-state voltage (min.)	79V AC
On-state current	2.0 mA @ 79V AC (min.), 10.0 mA @ 132V A (max.)
Inrush current (max.)	150 mA
Off-state current (max.)	1.0 mA
Heat dissipation (max.)	0.10 W/input
IEC input compatibility	Type 1
Environmental	
Operating temperature	-20…+55 °C (-4…+131 °F)
Storage temperature	-40…+85 °C (-40…+185 °F)
Humidity	5…95%, non-condensing
Vibration (IEC 68-2-6)	3 G
Shock (IEC 68-2-27)	30 G
Environmental	
Maximum altitude	2,000 m
Pollution environment	Pollution degree 2
Terminal marking	EN50012
Degree of protection	IP2LX
Electromagnetic Compatibility	
ESD Immunity (IEC 10000-4-2)	6 kV contact, 8 kV air
Radiated Immunity (IEC 10000-4-3)	10V/m
Fast transient burst (IEC 10000-4-4)	4 kV (Power), 2 kV (Control)
Surge immunity (IEC 10000-4-5)	2 kV common mode, 1 kV differential mode
Radiated and conducted emissions	Class A
Physical	
Weight	60 g (2.1 oz.)
Certifications	UR, cUR, CE

Trip Class 5

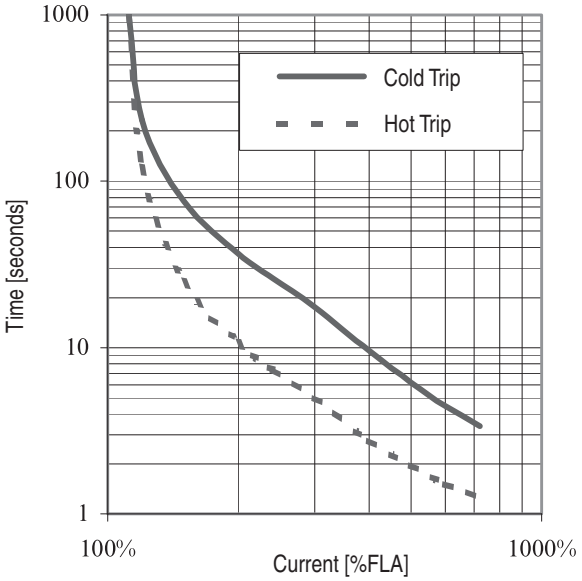

Trip Class 10

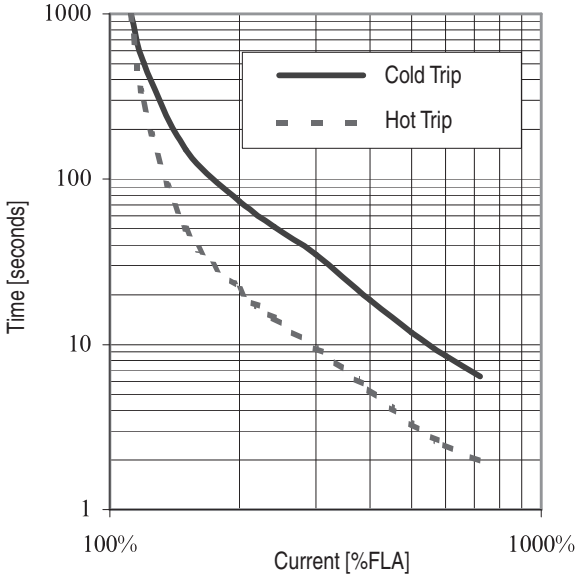

Trip Class 20

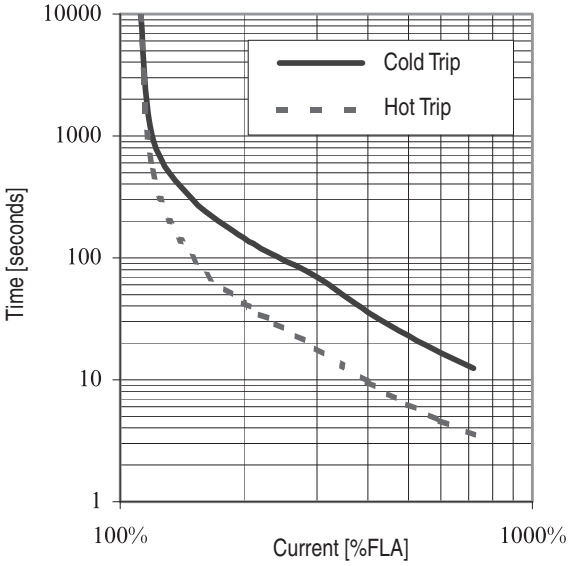

Trip Class 30

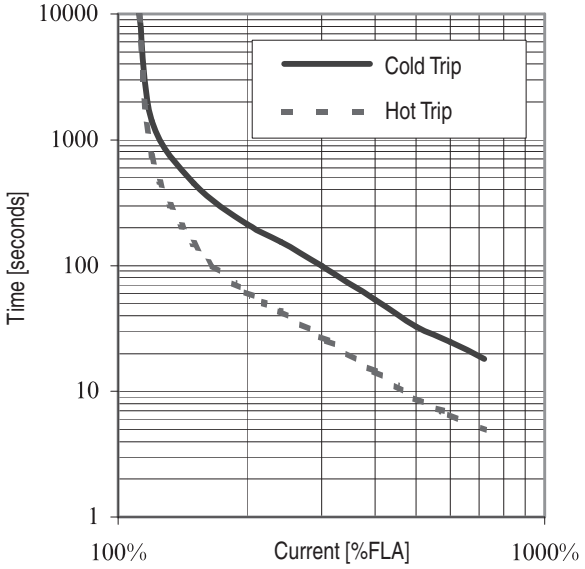

Typical Wiring Schematics – NEMA

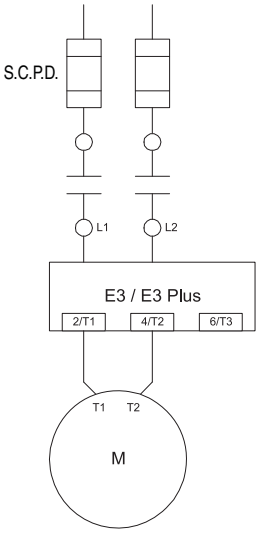

Single-Phase

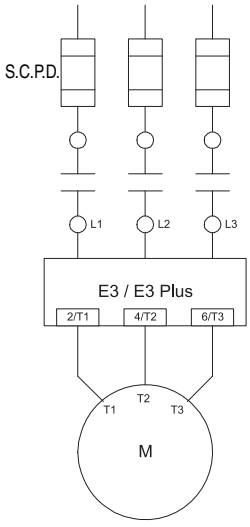

Three-Phase

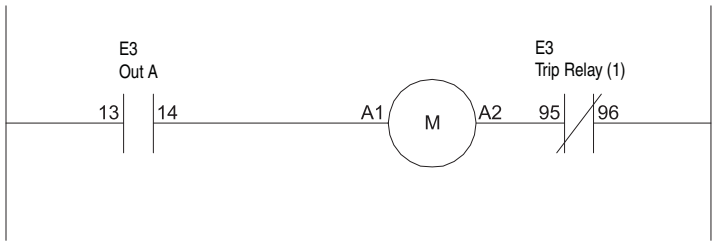

Typical Wiring Schematics – IEC

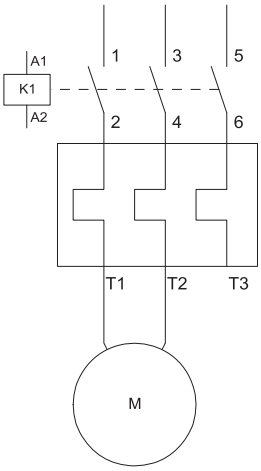

Single-Phase

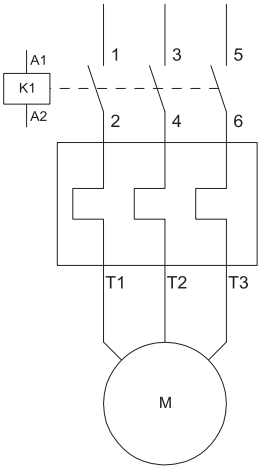

Three-Phase

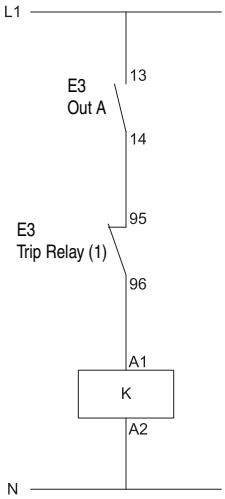

Typical Wiring Schematics – IEC

Reversing Starter Application

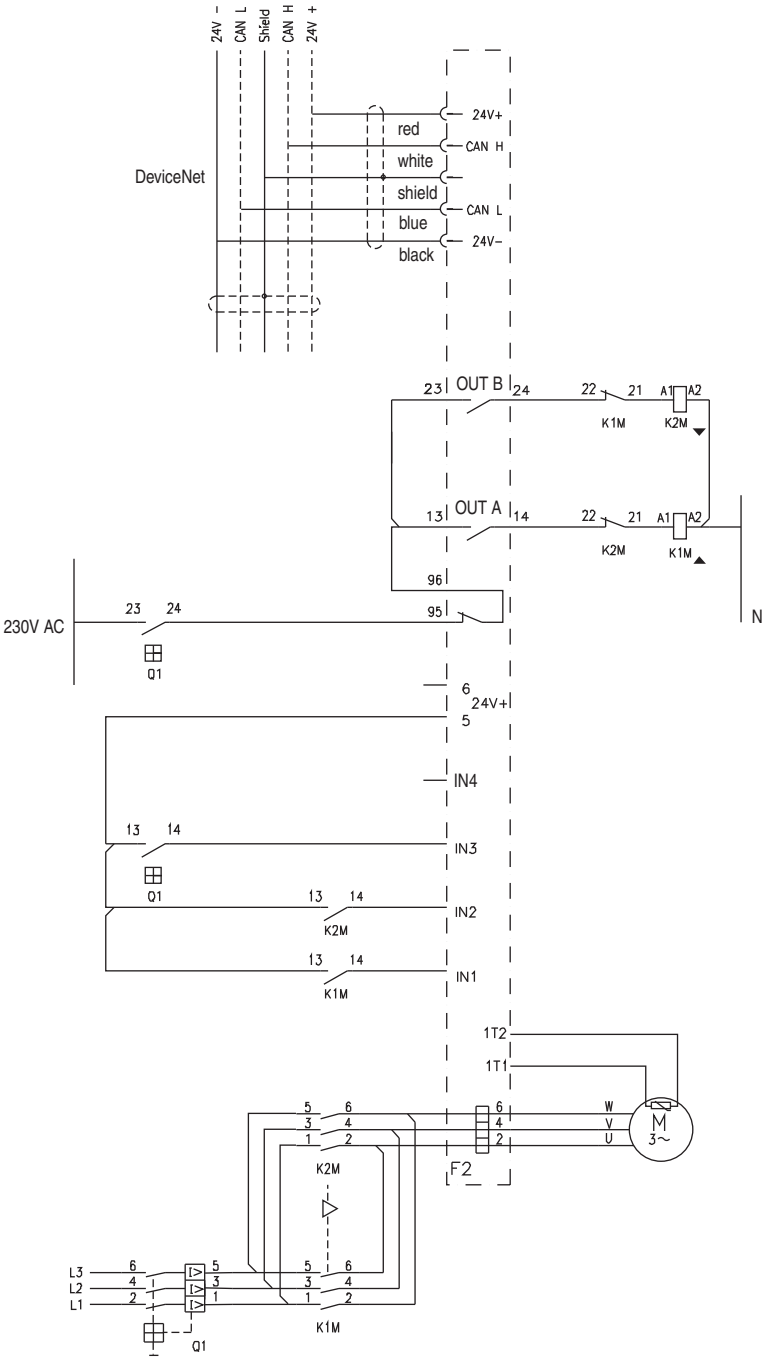

Approximate dimensions are shown in millimeters (inches). Dimensions are not to be used for manufacturing purposes.

Bulletin 109 Starter Approximate Dimensions

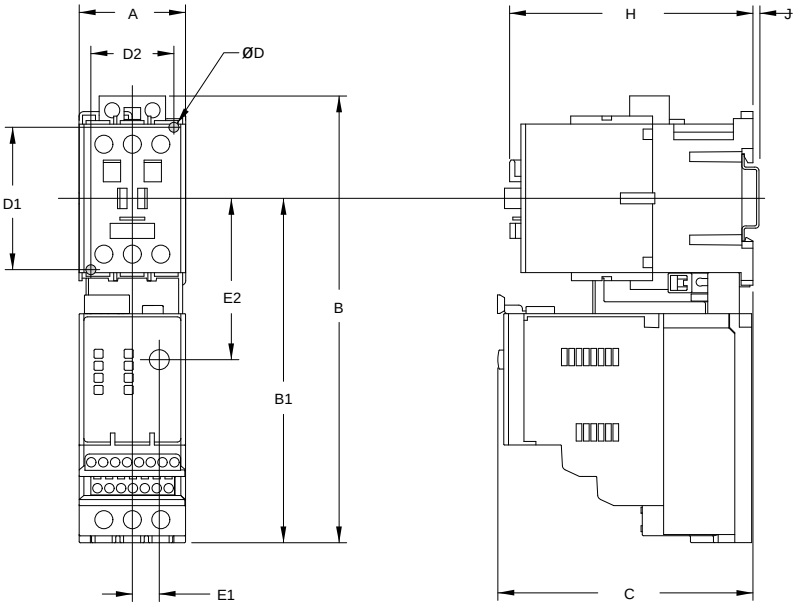

Overload Cat. No.	Contactor Cat. No.	Width A	Height B		B1		Depth C	E1	E2
			without 193-EIMD	with 193-EIMD	without 193-EIMD	with 193-EIMD			
193-EC_ _B	100-C09, -C12 -C16, -C23	45 (1-25/32)	188.3 (7-13/32)	207.7 (8-11/64)	145.1 (5-23/32)	164.5 (6-15/32)	107 (4-7/32)	11.4 (29/64)	67.9 (2-43/64)
193-EC_ _D	100-C30, -C37	45 (1-25/32	188.3 (7-13/32)	207.7 (8-11/64)	145.1 (5-23/32)	164.5 (6-15/32)	107 (4-7/32)	11.4 (29/64)	67.9 (2-43/64)
193-EC_ _D	100-C43	54 (2-1/8)	188.3 (7-13/32)	207.7 (8-11/64)	145.1 (5-23/32)	164.5 (6-15/32)	107 (4-7/32)	11.4 (29/64)	67.9 (2-43/64)
193-EC_ _E	100-C60, -C72, -C85	72 (2-53/64)	236.1 (9-19/64)	255.5 (10-1/16)	173.2 (6-13/16)	192.6 (7-37/64)	124.6 (4-29/32)	11.4 (29/64)	89.8 (3-17/32)

Overload Cat. No.	Contactor Cat. No.	D1	D2	H	J	ØD
193-EC_ _B	100-C09, -C12 -C16, -C23	60 (2-23/64)	35 (1-3/8)	85.1 (3-23/64)	2 (5/64)	Ø4.2 (11/64Ø)
193-EC_ _D	100-C30, -C37	60 (2-23/64)	35 (1-3/8)	104 (4-3/32)	2 (5/64)	Ø4.2 (11/64Ø)
193-EC_ _D	100-C43	60 (2-23/64)	45 (1-25/32)	107 (4-7/32)	2 (5/64)	Ø4.2 (11/64Ø)
193-EC_ _E	100-C60, -C72, -C85	100 (3-15/16)	55 (2-11/64)	125.5 (4-15/16)	2 (5/64)	Ø5.5 (7/32Ø)

Approximate dimensions are shown in millimeters (inches). Dimensions are not to be used for manufacturing purposes.

Bulletin 109 Starter Approximate Dimensions, Continued

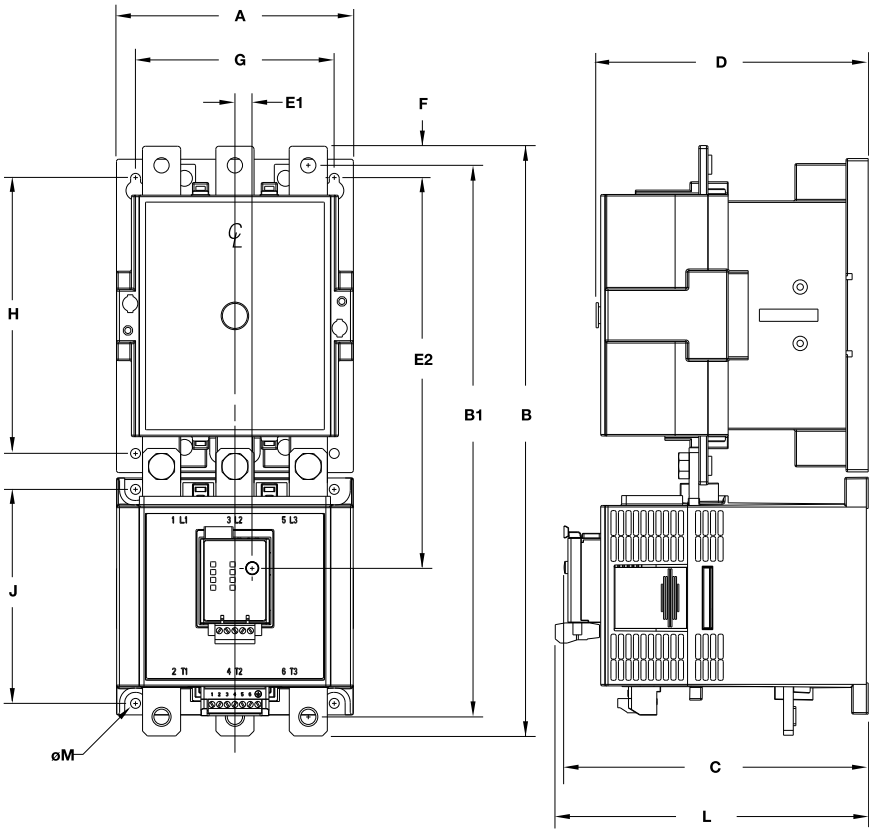

Overload Cat. No.	Contactor Cat. No.	A	Height B without Terminal Covers	Height B with Terminal Covers	B1	Depth C	D	E1	E2
193-EC_ _F	100-D95 100-D110	120 (4.72)	336.3 (13.24)	418 (16.45)	311.8 (12.27)	175.1 (6.89)	156 (5.14)	11.4 (0.45)	216.1 (8.51)
	100-D140 100-D182	120 (4.72)	339.8 (13.38)	418 (16.45)	317.8 (12.50)	175.1 (6.89)	156 (5.14)	11.4 (0.45)	216.1 (8.51)
193-EC_ _G	100-D210 100-D250 100-D300 100-D420	155 (6.10)	385.8 (15.19)	487.4 (19.19)	360.8 (14.2)	198.9 (7.83)	180 (7.09)	11.4 (0.45)	255 (10.04)
193-EC_ _H	100-D630 100-D850	255 (10.04)	552 (21.73)	915 (36.02)	508 (20)	291.7 (11.49)	270.7 (10.66)	11.4 (0.45)	373.9 (14.72)

Overload Cat. No.	Contactor Cat. No.	F	G	H	J	K	L	M
193-EC_ _F	100-D95 100-D110	12.5 (0.49)	100 (3.94)	145 (5.71)	135 (5.31)	22.3 (0.88)	180.9 (7.12)	8 - 5.6 (8 - 0.22)
	100-D140 100-D182	16 (0.63)	100 (3.94)	145 (5.71)	135 (5.31)	22.3 (0.88)	180.9 (7.12)	8 - 5.6 (8 - 0.22)
193-EC_ _G	100-D210 100-D250 100-D300 100-D420	21 (0.83)	130 (5.12)	180 (7.09)	140 (5.51)	23.5 (0.93)	204.7 (8.06)	8 - 6.5 (8 - 0.26)
193-EC_ _H	100-D630 100-D850	52.5 (2.07)	226 (8.90)	230 (9.06)	108 (4.25)	109 (4.29)	297.5 (11.71)	8 - 13 (8 - 0.51)

Approximate dimensions are shown in millimeters (inches). Dimensions are not to be used for manufacturing purposes.

Bulletin 193-EC5 Voltage Module

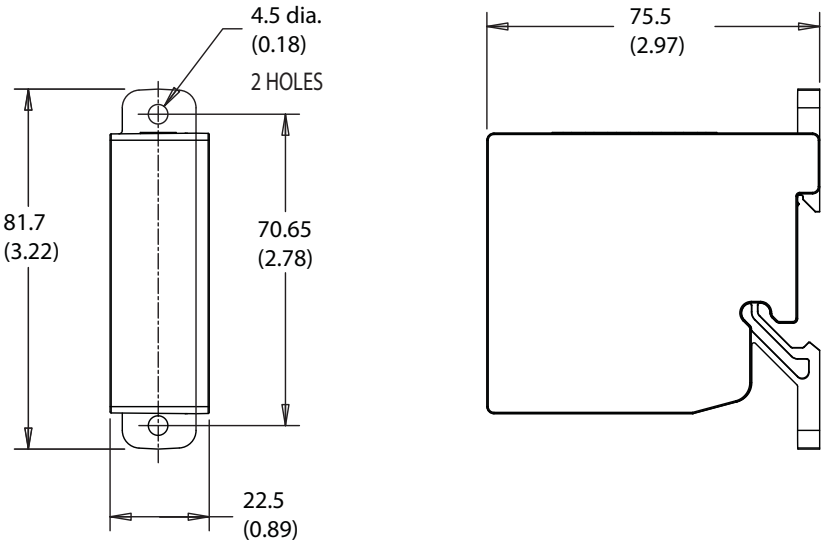

Panel Mount Adapters (For Use With Cat. No. 193-EC_ _B)

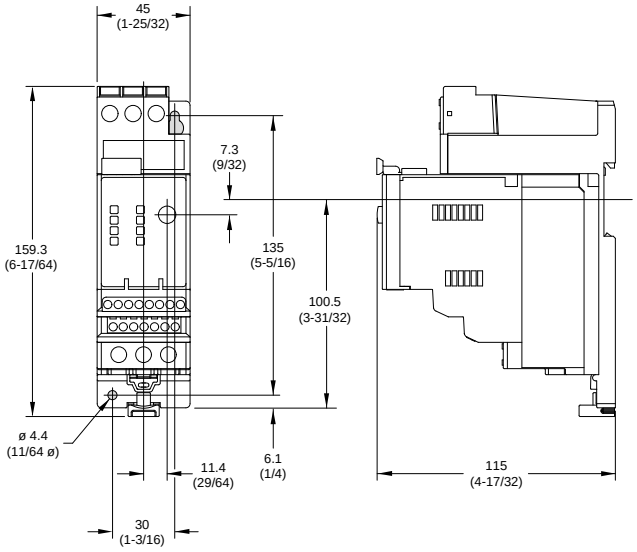

(For Use With Cat. No. 193-EC_ _D, 193-EC_ZZ)

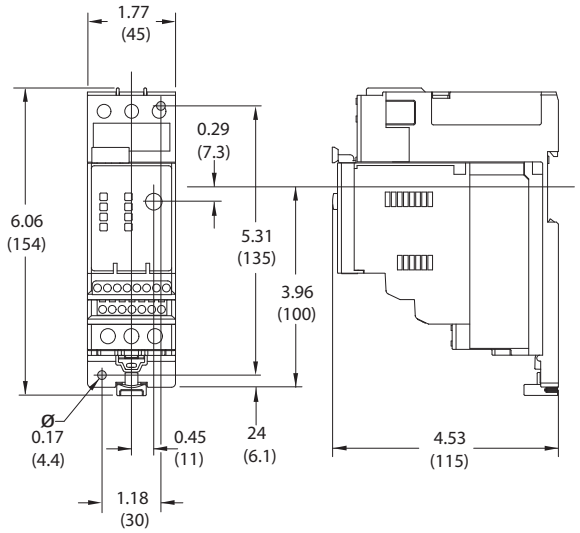

(For Use With Cat. No. 193-EC_ _E)

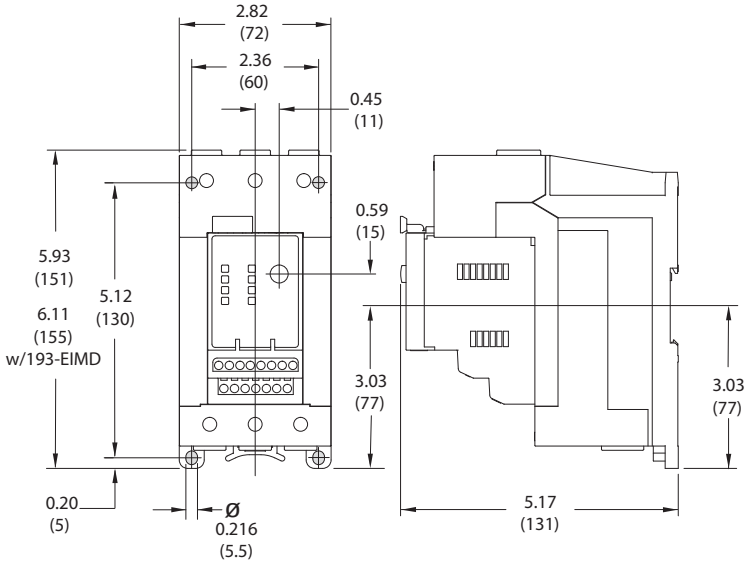

Important User Information

Read this document and the documents listed in the additional resources section about installation, configuration, and operation of this equipment before you install, configure, operate, or maintain this product. Users are required to familiarize themselves with installation and wiring instructions in addition to requirements of all applicable codes, laws, and standards.

Activities including installation, adjustments, putting into service, use, assembly, disassembly, and maintenance are required to be carried out by suitably trained personnel in accordance with applicable code of practice.

If this equipment is used in a manner not specified by the manufacturer, the protection provided by the equipment may be impaired.

In no event will Rockwell Automation, Inc. be responsible or liable for indirect or consequential damages resulting from the use or application of this equipment.

The examples and diagrams in this manual are included solely for illustrative purposes. Because of the many variables and requirements associated with any particular installation, Rockwell Automation, Inc. cannot assume responsibility or liability for actual use based on the examples and diagrams.

No patent liability is assumed by Rockwell Automation, Inc. with respect to use of information, circuits, equipment, or software described in this manual.

Reproduction of the contents of this manual, in whole or in part, without written permission of Rockwell Automation, Inc., is prohibited.

Documentation Feedback

Your comments will help us serve your documentation needs better. If you have any suggestions on how to improve this document, complete this form, publication RA-DU002, available at http://www.rockwellautomation.com/literature/.

Allen-Bradley, Rockwell Software, Rockwell Automation, and LISTEN. THINK. SOLVE are trademarks of Rockwell Automation, Inc.
Trademarks not belonging to Rockwell Automation are property of their respective companies.

Rockwell Otomasyon Ticaret A.Ş., Kar Plaza İş Merkezi E Blok Kat:6 34752 İçerenköy, İstanbul, Tel: +90 (216) 5698400

www.rockwellautomation.com

Power, Control and Information Solutions Headquarters

Americas: Rockwell Automation, 1201 South Second Street, Milwaukee, WI 53204-2496 USA, Tel: (1) 414.382.2000, Fax: (1) 414.382.4444
Europe/Middle East/Africa: Rockwell Automation NV, Pegasus Park, De Kleetlaan 12a, 1831 Diegem, Belgium, Tel: (32) 2 663 0600, Fax: (32) 2 663 0640
Asia Pacific: Rockwell Automation, Level 14, Core F, Cyberport 3, 100 Cyberport Road, Hong Kong, Tel: (852) 2887 4788, Fax: (852) 2508 1846

Publication 193-TD012A-EN-P - August 2014

Copyright © 2014 Rockwell Automation, Inc. All rights reserved. Printed in the U.S.A.