Allen-Bradley

DSA I/O for Distributed Starters

Cat. Nos. 100-DNY41R, 100-DNY42R, 100-DNY42S

User Manual

Rockwell Automation

Important User Information

Because of the variety of uses for the products described in this publication, those responsible for the application and use of this control equipment must satisfy themselves that all necessary steps have been taken to assure that each application and use meets all performance and safety requirements, including any applicable laws, regulations, codes and standards.

The illustrations, charts, sample programs and layout examples shown in this guide are intended solely for purposes of example. Since there are many variables and requirements associated with any particular installation, Allen-Bradley does not assume responsibility or liability (to include intellectual property liability) for actual use based upon the examples shown in this publication.

Allen-Bradley publication SGI-1.1, *Safety Guidelines for the Application, Installation and Maintenance of Solid-State Control* (available from your local Allen-Bradley office), describes some important differences between solid-state equipment and electromechanical devices that should be taken into consideration when applying products such as those described in this publication.

Reproduction of the contents of this copyrighted publication, in whole or part, without written permission of Rockwell Automation, is prohibited.

Throughout this manual we use notes to make you aware of safety considerations:

ATTENTION

Identifies information about practices or circumstances that can lead to personal injury or death, property damage or economic loss

Attention statements help you to:

- identify a hazard
- avoid a hazard
- recognize the consequences

IMPORTANT

Identifies information that is critical for successful application and understanding of the product.

Allen-Bradley is a trademark of Rockwell Automation, a core business of Rockwell International.

European Communities (EC) Directive Compliance

If this product has the CE mark it is approved for installation within the European Union and EEA regions. It has been designed and tested to meet the following directives.

EMC Directive

This product is tested to meet the Council Directive 89/336/EC Electromagnetic Compatibility (EMC) by applying the following standards, in whole or in part, documented in a technical construction file:

- EN 50081-2 EMC — Generic Emission Standard, Part 2 — Industrial Environment
- EN 50082-2 EMC — Generic Immunity Standard, Part 2 — Industrial Environment

This product is intended for use in an industrial environment.

Low Voltage Directive

This product is tested to meet Council Directive 73/23/EEC Low Voltage, by applying the safety requirements of EN 61131-2 Programmable Controllers, Part 2 - Equipment Requirements and Tests. For specific information required by EN 61131-2, see the appropriate sections in this publication, as well as the Allen-Bradley publication Industrial Automation Wiring and Grounding Guidelines For Noise Immunity, publication 1770-4.1.

This equipment is classified as open equipment and must be mounted in an enclosure during operation to provide safety protection.

Manual Objectives

The purpose of this manual is to provide you with the information necessary to apply the Bulletin 100 DeviceNet Starter Auxiliary Series B. Described in this manual are methods for installing, configuring, and troubleshooting the Bulletin 100 DeviceNet Starter Auxiliary.

IMPORTANT Read this manual in its entirety before installing, operating, servicing, or initializing the DeviceNet Starter Auxiliary

Who Should Use This Manual

This manual is intended for qualified personnel responsible for setting up and servicing these devices. You must have previous experience with and a basic understanding of communications terminology, configuration procedures, required equipment, and safety precautions.

You should understand DeviceNet network operations, including how slave devices operate on the network and communicate with a DeviceNet master.

You should be familiar with the use of the RSNetWorx for DeviceNet software for network configuration (Rockwell Software Catalog Number 9357-DNETL3). This software package is referred to often in this manual.

Vocabulary

In this manual we refer to the:

Bulletin 100 DeviceNet Starter Auxiliary as "DSA"

Programmable Logic Controller as a Programmable Controller, PLC controller, or SLC controller

DeviceNet as DNet or DNET

National Electrical Code as NEC

Earth Ground as GND

Firmware Version

The convention for identifying firmware releases is as follows:

FRN = Firmware Release Number.

5 = Firmware major release number.

(.) = Decimal point separator.

001 = Minor release number representing minor updates.

Numbers to the right of the decimal point do not affect the content of this manual.

Reference Manuals

For an overview of DeviceLogix:

- DeviceLogix User Manual, Publication No. ACIG-UM001A-EN-P
- DeviceLogix Quict Start manual, Publication No. ACIG-QS001A-EN-P

For ControlLogix and 1756-DNB information:

- ControlLogix DeviceNet Scanner Module Installation Instructions, Publication No. 1756-5.66
- ControlLogix DeviceNet Scanner Module Configuration Manual, Publication No. 1756-6.5.19

For SLC 500 and 1747-SDN information:

- DeviceNet Scanner Module Installation Instructions, Publication No. 1747-6.5.2
- DeviceNet Scanner Module Configuration Manual, Publication No. 1747-5.8

For PLC5 and 1771-SDN information:

- DeviceNet Scanner Module Installation Instructions, Publication No. 1771-5.14
- DeviceNet Scanner Module Configuration Manual, Publication No. 1771-6.5.118

To install and implement a DeviceNet network:

- DeviceNet Cable System Planning and Installation Manual, Publication No. 1485-6.7.1

IMPORTANT Read the DeviceNet Cable System Planning and Installation Manual (Publication No. 1485-6.7.1) in its entirety before planning and installing a DeviceNet system. If the network is not installed according to this document, unexpected operation and intermittent failures can occur.

If this manual is not available, please contact either the local Rockwell Automation distributor or Sales Office and request a copy. Copies of this and all other reference publications listed may also be ordered from the Automation Bookstore at:

http://www.theautomationbookstore.com

Manual Organization

Chapter	Title	Description
	Preface	Manual objectives, audience, vocabulary, manual conventions, safety precautions, DeviceNet compatibility
1	Product Overview	Packing list, product description, catalog numbers, European Union Directive compliance
2	Installation	Installation cabling and hardware
3	DeviceNet Node Commissioning	Basic Configuration, input/output assemblies, network control, scan lists
4	Parameter Descriptions	Descriptions of all configuration and status parameters
5	Explicit Messaging	Using explicit messaging to read inputs and write outputs
6	Troubleshooting	LED indications and fault descriptions
7	Specifications	Environmental, electrical, and communication specifications
8	DeviceNet Information	DeviceNet message types and object classes

Safety Precautions

ATTENTION

Only personnel familiar with DeviceNet devices and associated machinery should plan or implement the installation, startup, configuration, and subsequent maintenance of the DSA. Failure to comply may result in personal injury and/or equipment damage.

Product Overview

Chapter Objectives

In this chapter, you will read about:

- The physical layout of the DSA
- Catalog number explanation
- DeviceNet compatibiliy
- DeviceLogix compatibility
- European Union Directive compliance

Bill of Material

Your DSA product package includes the following items:

Item	Description	Quantity
DSA Module	22.5 mm Series B module	1
Input Plug	Black Pluggable terminal block, 5 mm spacing	1
Output Plug	Black Pluggable terminal block, 5 mm spacing	1
DeviceNet Plug	Grey terminal block with test points (5.08 mm)	1

Device Description

The Bulletin 100 DeviceNet Starter Auxiliary provides a low-cost DeviceNet node for motor starters and general I/O communication applications. It includes inputs that can be connected to hard contacts (e.g, contactor or circuit breaker auxiliary contact, limit switch, 2-wire proximity switch, 3-wire photoswitch — external power may be required — consult factory) and outputs (with external power supply on solid-state output modules) that may be used to energize contactor(s), solenoids, lamps, etc.

The Bulletin 100 DeviceNet Starter Auxiliary also implements the Rockwell Automation "DeviceLogix" Smart Component Technology. This allows the user to program simple logic into the DSA.

Figure 1.1 DeviceNet Starter Auxiliary

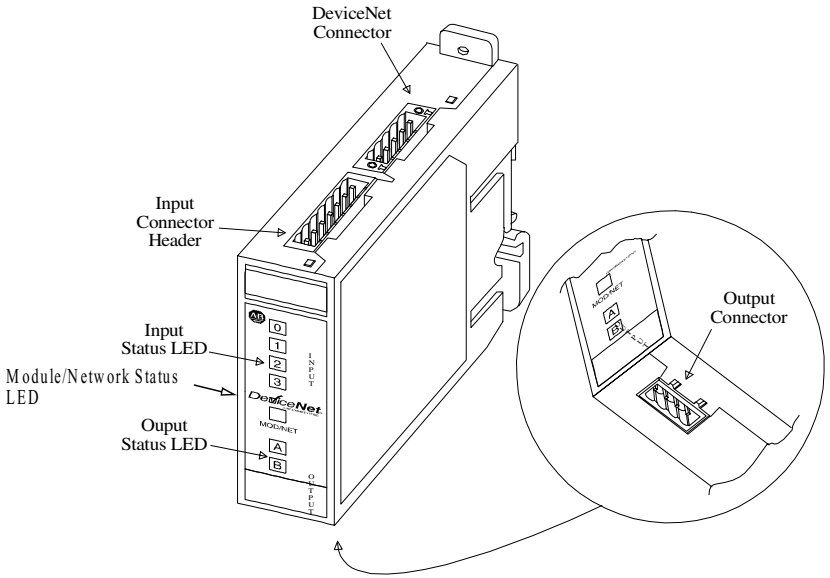

Catalog Number Explanation

The catalog numbering scheme for the DeviceNet Starter Auxiliary is explained in Figure 1.2 below.

Figure 1.2 Catalog Number Explanation

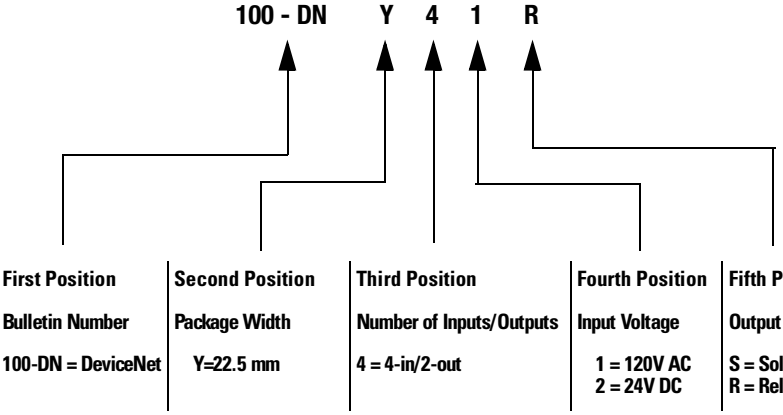

DeviceNet Compatibility

The DSA Communicates as a Group 2 slave device via the DeviceNet Protocol. It supports the explicit, polled I/O, and change-of-state (COS)/cyclic I/O messaging of the predefined master/slave connection set; Group 4 Faulted Node Recovery; Automatic Baud Rate Detection; and the Configuration Consistency Value.

DeviceLogix Compatibility

DeviceLogix is functionality that has been added to a number of Rockwell Automation devices, including the DSA Series B. This functionality gives users the ability to control outputs and manage status information locally within the device. DeviceLogix is configured using the "DeviceLogix Editor," a Function Block-based applet launched within RSNetworx for DeviceNet.

The DeviceLogix editor ships as part of RSNetworx for DeviceNet starting with revision 3.00.00. EDS files that enable DeviceLogix are shipped with RSNetworx starting with release 3.00.00 service pack 2. EDS files can be obtained from the Allen-Bradley internet site at:

http://www.ab.com/networks/eds/

Enter the desired catalog number and Major Revision 5 to retrieve the desired EDS file. Refer to the "Registering an EDS file" section on page 3-3 of this manual for instructions on how to install EDS files into RSNetworx.

European Union Directive Compliance

When this product is installed within the European Union of EEA regions, the following regulations apply.

EMC Directive

This product is tested to meet Council Directive 89/336/EEC Electromagnetic Compatability (EMC) using the following standards in whole or in part:

- EN 50081-1 EMC - Generic Emissions Standard, Part 1 - Residential Environment.
- EN 50081-2 EMC - Generic Emissions Standard, Part 2 - Industrial Environment.
- EN 50082-1 EMC - Generic Immunity Standard, Part 1 - Residential Environment.
- EN 50082-2 EMC - Generic Immunity Standard, Part 2 - Industrial Environment.
- 60947-1/A11 60947 Low-Voltage Switchgear and Controlgear Standard.

Low Voltage Directive

This product is also designed to meet Council Directive 73/23/EEC Low Voltage by applying IEC 947/EN 60947 Low-Voltage Switchgear and Controlgear.

Installation

Chapter Objectives

This chapter contains information about:

- Device storage and operating environment.
- Mounting the device.
- Connecting and wiring the device.

Read this chapter completely before you attempt to install or configure your DeviceNet Starter Auxiliary. Double check all connections and option selections before you apply power.

Storage and Operation

To prolong the product life, take the following precautions:

- Store within an ambient temperature range of –40°…+85°C (-40°…185°F).
- Store within a relative humidity range of 0…95%, non-condensing.
- Avoid storing or operating the device where it could be exposed to a corrosive atmosphere.
- Protect from moisture and direct sunlight.
- Operate at an ambient temperature range of 0°…+60°C (32°…140°F).

Mounting and Dimensions

The DSA may be DIN Rail mounted (see Figure 2.1). The unit requires 37.4 mm (1-1/2 in.) clearance at the top to remove the DeviceNet and input connectors, and 37.4 mm (1-1/2 in.) clearance in the bottom for the output connector.

Figure 2.1 Bulletin 100-DNY Dimensions

Dimensions shown in inches (mm), Not intended for manufacturing purposes.
Dimensions shown in inches (mm)

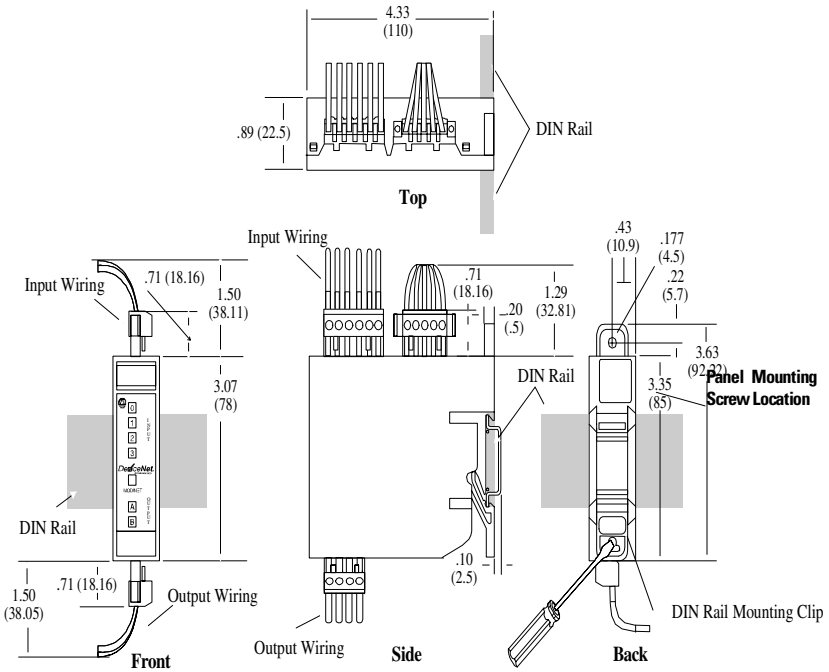

DSA Wiring Diagrams

Figures 2.2 through 2.4 show typical wiring diagrams for the three versions of the DSA module. The wiring diagram for each specific type is located on the right side of the device housing.

Figure 2.2 Wiring Diagram - 24V DC Input/Relay Output (Cat. No. 100-DNY42R shown)

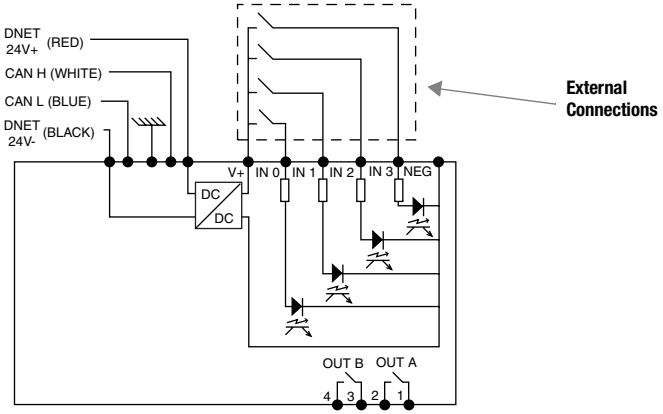

Figure 2.3 Wiring Diagram - 24V DC Input/Solid-State Output (Cat. No. 100-DNY42S Shown)

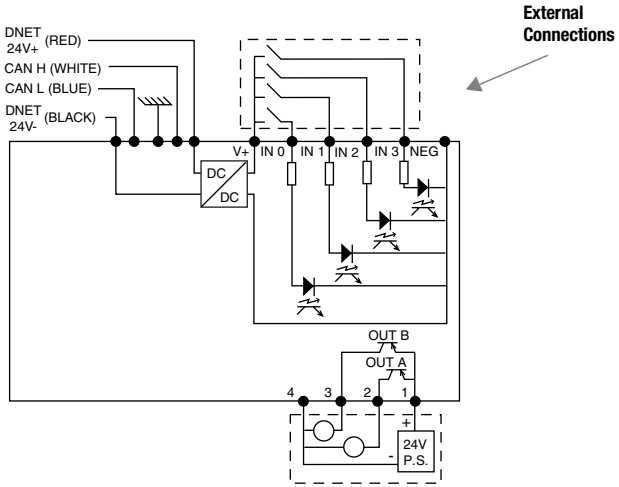

Figure 2.4 Wiring Diagram - 120V AC Input/Relay Output (Cat. No. 100-DNY 41R shown)

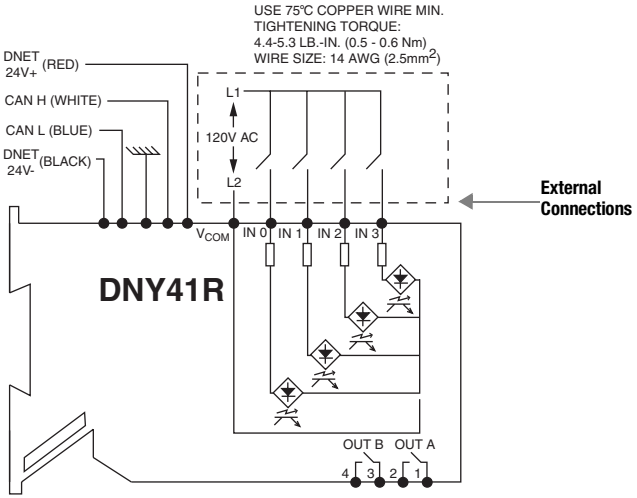

Input and Output Connections

Figure 2.5 below shows the location of the input and output connectors.

Figure 2.5 Input/Output Connections

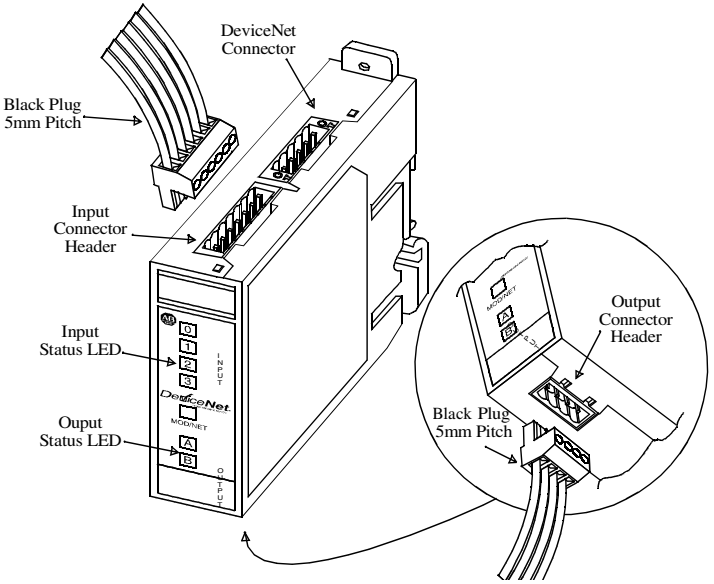

24V DC Input DSA

For the 24V DC input DSA, input power is sourced from its isolated internal power supply via the V+ pin on the input connector header. The power is derived from the DeviceNet power source (24V+).

ATTENTION

Do not apply external power for 24V DC input version.

120V AC Input DSA

The 120V AC input DSA requires an external power supply for the 120V inputs.

24V DC Solid-State Output DSA

The outputs require an external 24V DC power supply connected between Ext 24V+ (Pin 1) and Ext 24V- (Pin 4) of the output connector header.

Relay Output DSA

Relay Output DSAs are suitable for either 240/120V AC or 24V DC according to ratings in Chapter 7 (Specifications).

IMPORTANT

Refer to Chapter 7 for contact rating information

Typical Wiring Examples

Figure 2.6 Motor Starter with DSA (24V DC Input/Relay Output) and Sensor Connection

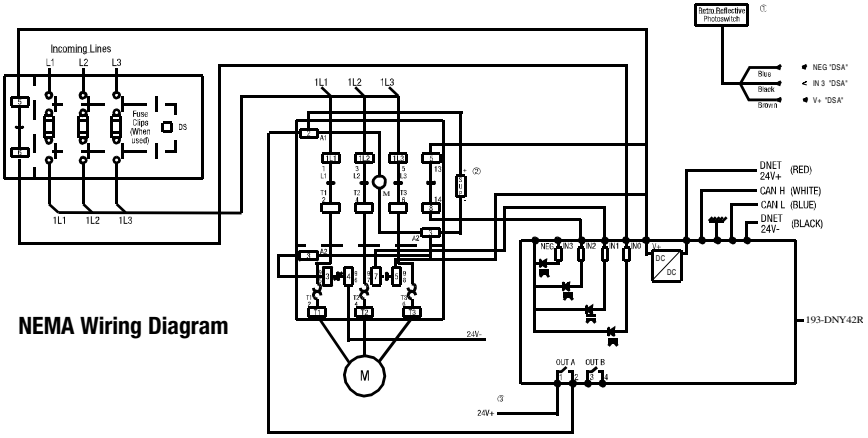

① Remote Device: 42 GRM 9000-QD or equivalent. Consult factory for equivalent.

② Transient Suppressor recommended

③ It is suggested that coil power be supplied from a separate power source

④ Remote Device: Consult factory for proper 3-wire photoswitch application

Figure 2.7 Motor Starter with DSA (24V DC Input/Relay Output) and Sensor Connection

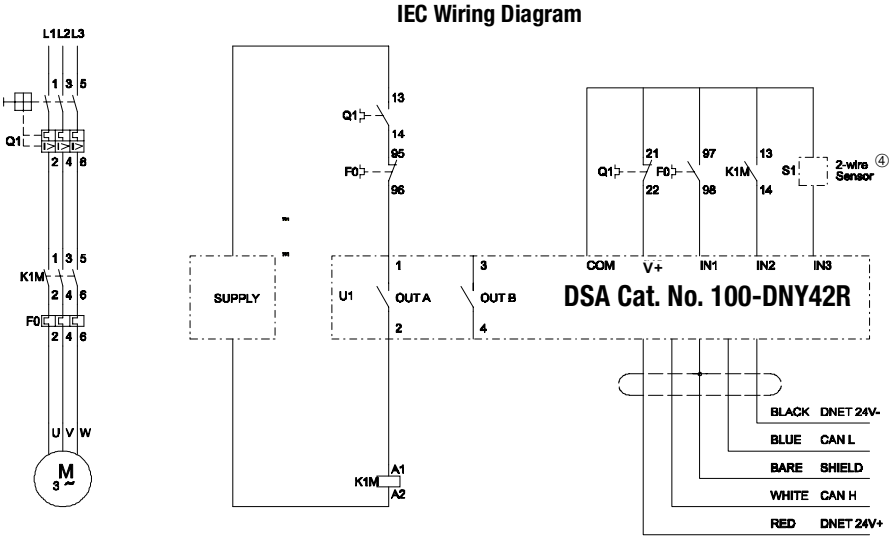

① Remote Device: 42 GRM 9000-QD or equivalent. Consult factory for equivalent.
② Transient Suppressor recommended
③ It is suggested that coil power be supplied from a separate power source
④ Remote Device: Consult factory for proper 3-wire photoswitch application.

Figure 2.8 Motor Starter with DSA (24V DC Input/Solid-State Output) and Sensor Connection

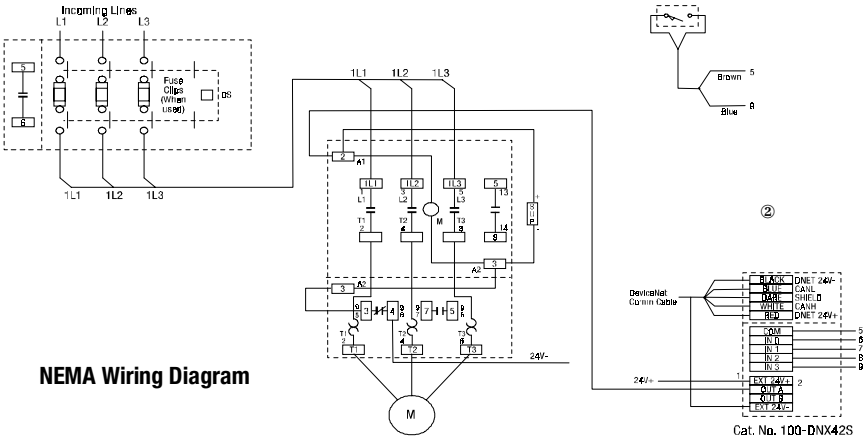

NEMA Wiring Diagram

① Remote Device: 871 TM DHSNE or equivalent:
② Transient Suppressor recommended
③ Suggested external 24V DC power supply

Figure 2.9 Motor Starter with DSA (24V DC Input/Solid-State Output) and Proximity Sensor Connection

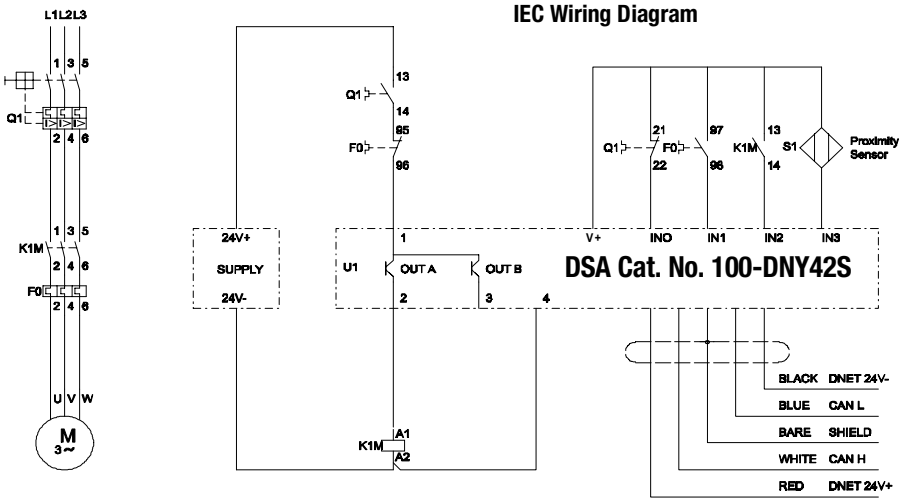

① Remote Device: 871 TM DHSNE or equivalent:
② Transient Suppressor recommended
③ Suggested external 24V DC power supply

Figure 2.10 Reversing Motor Starter with DSA (120V AC Input / Relay Output)

NEMA Wiring Diagram

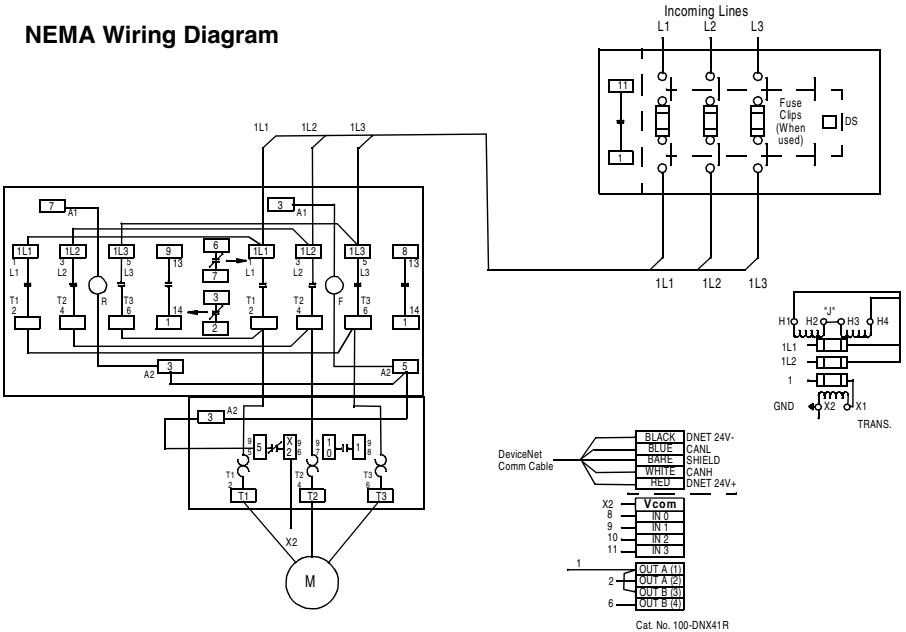

Figure 2.11 Reversing Motor Starter with DSA (120V AC Input / Relay Output)

IEC Wiring Diagram

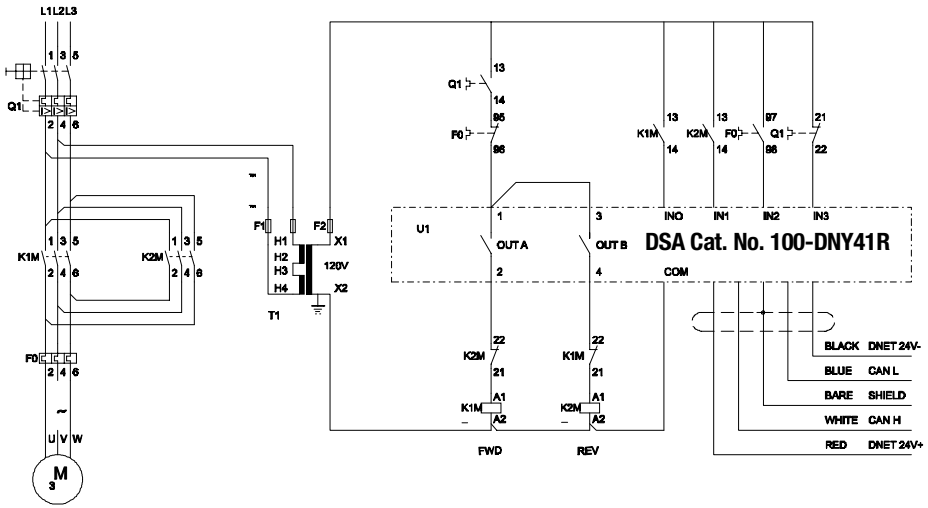

DeviceNet Connector

The DSA receives power and communications through the DeviceNet Connector. DeviceNet cable wires connect to the plug-in connector terminal block as shown in the following table. See Chapter 7 for power consumption specifications.

Terminal	Signal	Function	Color
1	COM	Common	Black
2	CAN_L	Signal Low	Blue
3	SHIELD	Shield	Uninsulated
4	CAN_H	Signal High	White
5	VDC+	Power Supply	Red

Wiring the DeviceNet Connector

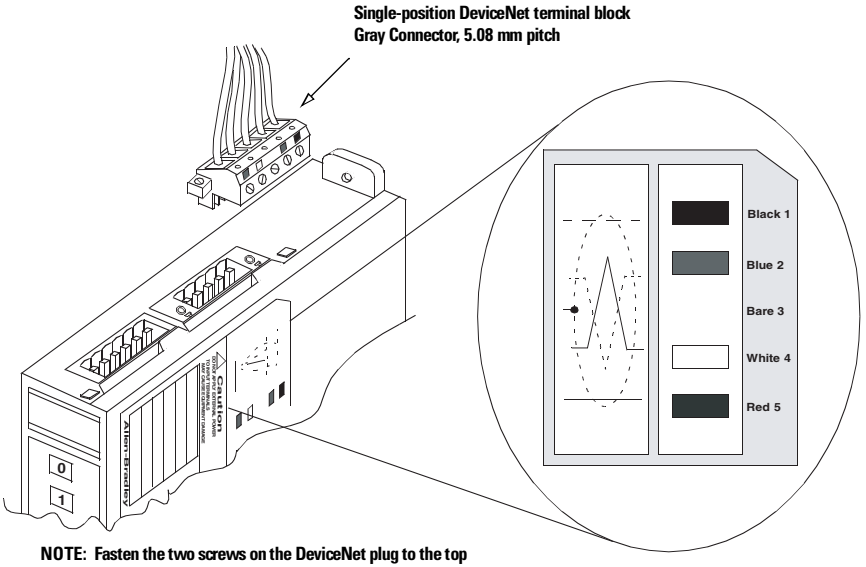

NOTE: Fasten the two screws on the DeviceNet plug to the top of the DSA module to avoid accidental disconnection.

DeviceNet Node Commissioning

Chapter Objectives

The purpose of this chapter is to provide an overview of the steps necessary to commission the DSA with a DeviceNet Scanner. This chapter describes how to:

- Set up a DSA on a DeviceNet Network
- Set up a 1747-SDN DeviceNet Scanner to communicate with the DSA.

IMPORTANT This chapter illustrates examples that use the 1747-SDN Scanner and RSNetWorx for DeviceNet software. The concepts shown can be applied to the 1771-SDN Scanner and the 1756-SDN Scanner as well.

Getting Started

We will start by assuming that a new "out of the box" DSA has been put onto the network depicted in Figure 3.1. Note that a new "out of the box" DSA will power up at MAC ID 63 rather than at MAC ID 4 (as shown in the figure).

Figure 3.1 DeviceNet Network Diagram

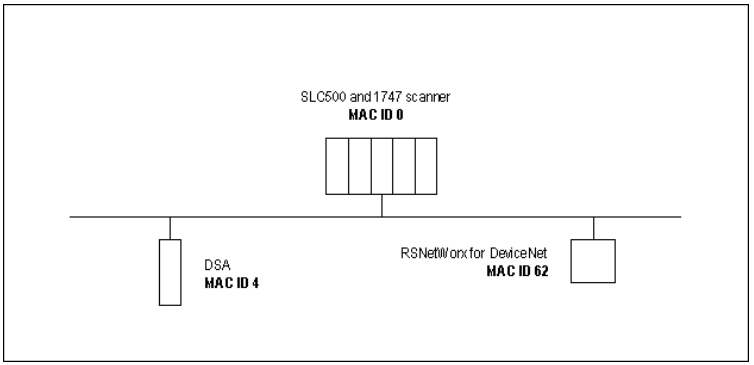

After invoking RSNetWorx, go "Online". Going "Online" establishes communication between RSNetWorx and the DeviceNet network. Following are the steps to perform:

1. From the "Network" menu, choose "Online".

2. Choose the appropriate DeviceNet PC interface. In the example below, a 1770-KFD module is chosen.

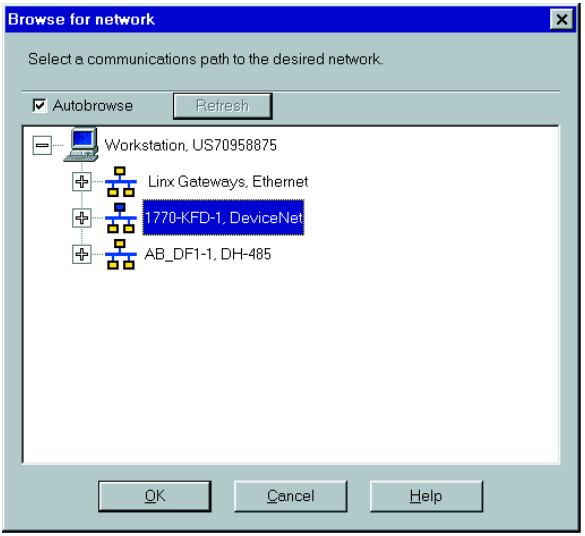

3. Click **OK**.

4. The following alert will appear. Click **OK**.

RSNetWorks will now "browse" the network and report any DeviceNet nodes that it finds connected. While this "browse" of the network is performed, the following status window is displayed:

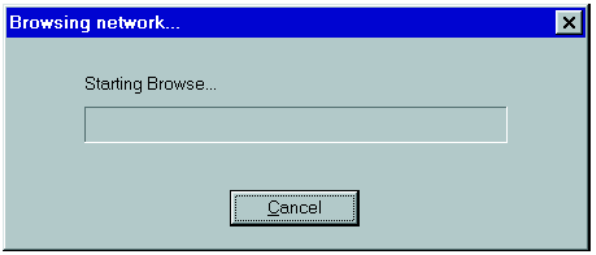

Upon completion of the "browse", RSNetWorx will display all of the nodes that it detected on the network. For versions 3.01.04 of RSNetWorks and earlier, the DSA Electronic Data Sheet (EDS) files are not included in the release, so DSAs will appear as "Unregistered Devices" in the RSNetWorx window shown in the following figure. If the DSA does not appear as an "Unregistered Device" in the RSNetWorx window, you may skip to the "Changing the Node Address" section of this chapter. Otherwise you will have to register an EDS file, as outlined in the next section.

Registering an EDS File

The figure below depicts the RSNetWorx window after a browse of the network has been completed.

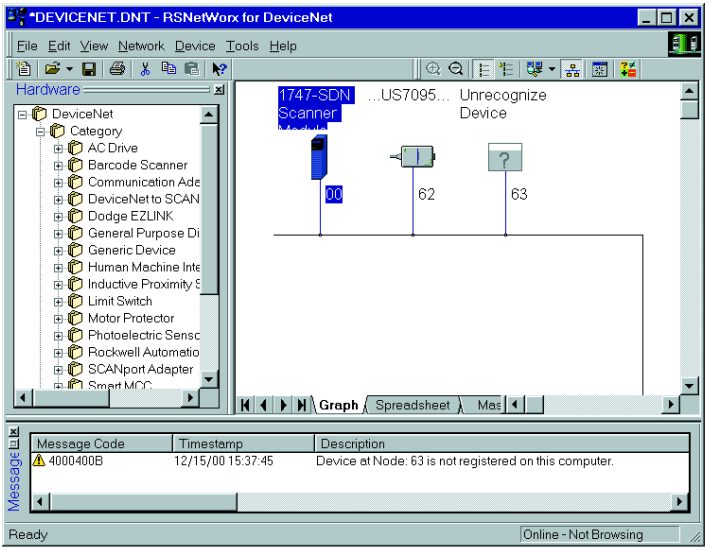

Note that the DSA at MAC ID 63 shows up on the network as an "Unrecognized Device". This means that an EDS file for the device must be registered. EDS files for the DSA can be download from the following website:

http://www.ab.com/networks/eds/

Enter the desired catalog number and the Major Revision 5 to retrieve the desired EDS file.

1. To register an EDS file, choose "EDS Wizard…" from the "Tools" menu. The following screen appears:

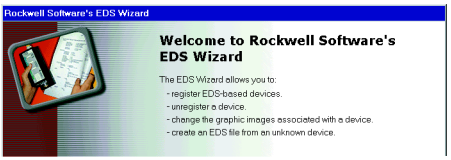

2. Click **Next>**. The following screen appears:

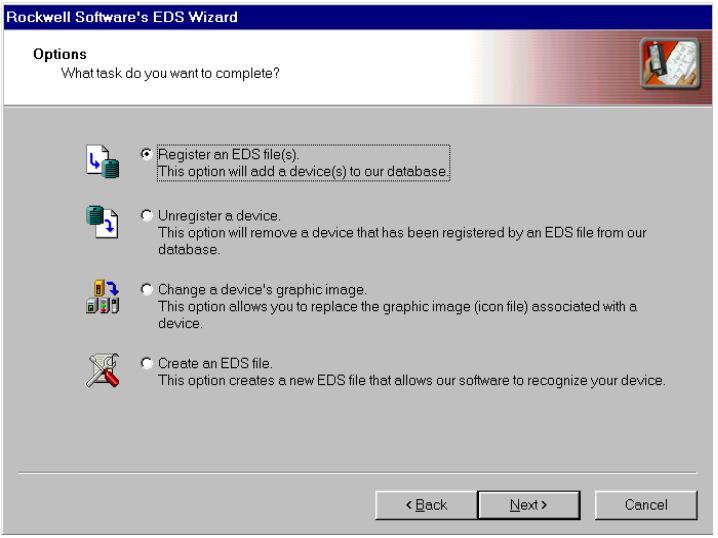

3. Choose the "Register an EDS file(s)" radio button as shown above then click **Next**. The following screen appears:

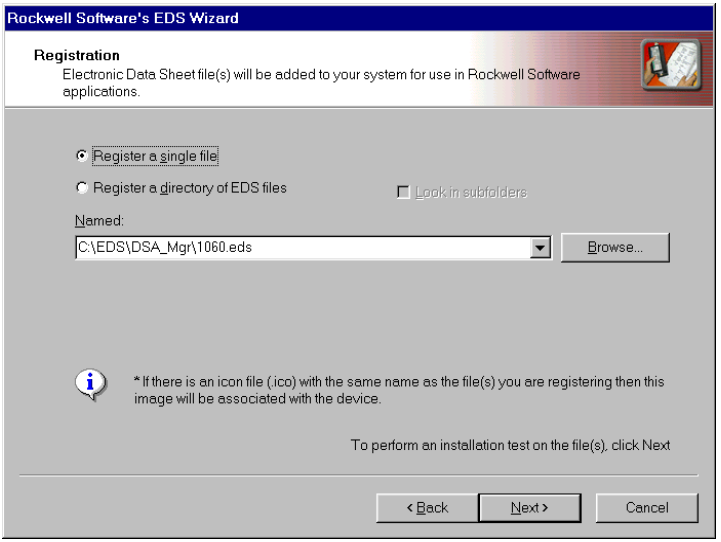

4. Choose the "Browse..." button and select the EDS file to be registered. When the EDS filename appears in the window's textbox, click the "**Next**" button. The following screen appears:

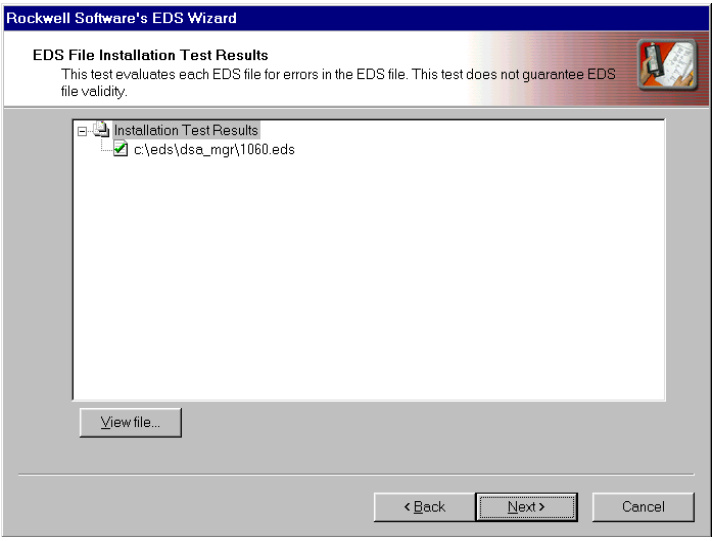

5. Click the "**Next**>" button. The following screen appears:

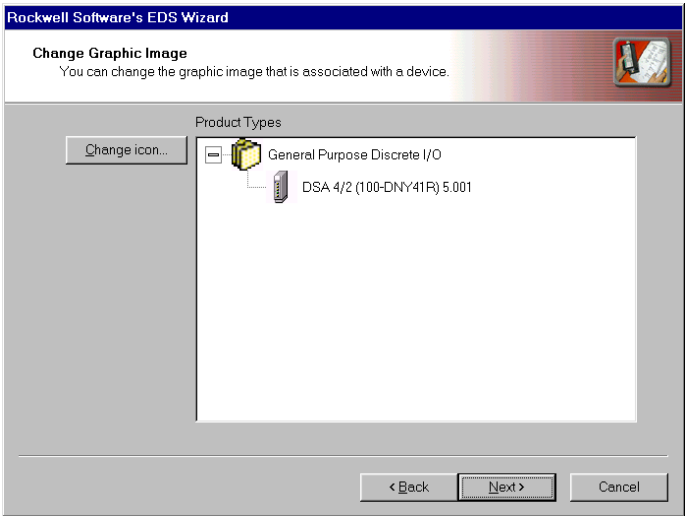

6. Click the **Next** > button. The following screen will appear:

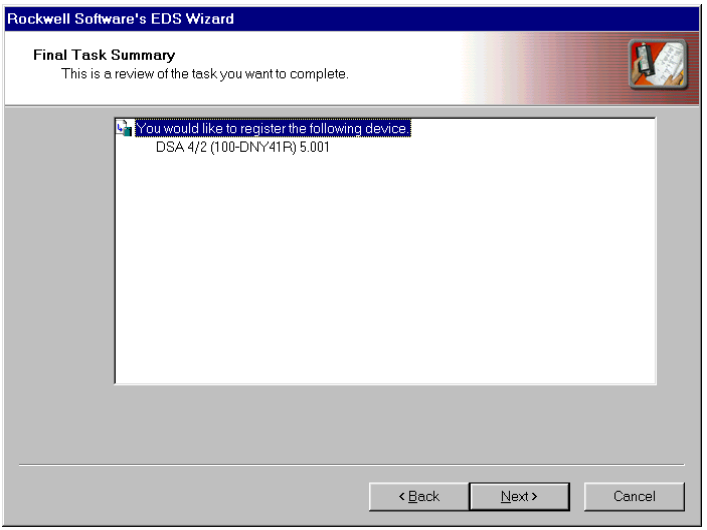

Click the **Next** > button. The following screen will appear:

7. Click the **Finish** button. After a short wait, the RSNetWorx for DeviceNet window will be updated as shown below. Note that the DSA icon may not appear correctly in the window until RSNetWorx is exited and reentered.

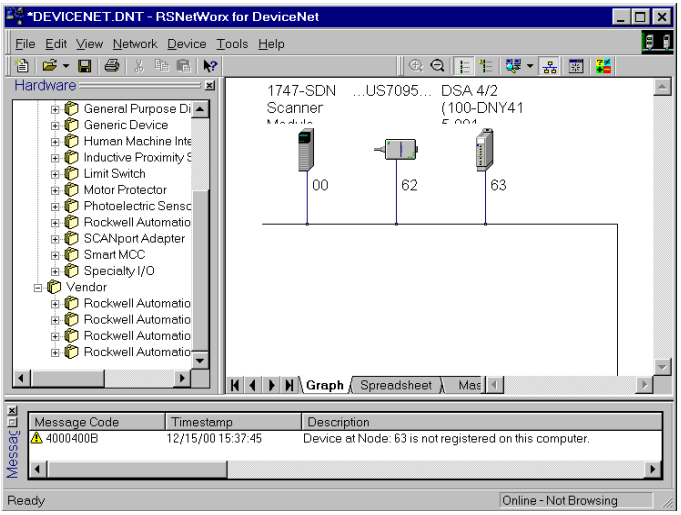

Changing the Node Address

Every device on a DeviceNet network must have a unique node address or "MAC ID" between 0 and 63. The Series B DSA has rotary address switches that may be used to set the MAC ID. However if the MAC ID switches are set to values of 64…99 (the DSA is shipped with its MAC ID switches set to 99), the MAC ID may be set to any address over the network from 0…63 .

1. To change the MAC ID using RSNetWorx, choose “Node Commissioning…” from the “Tools” menu. The following screen appears:

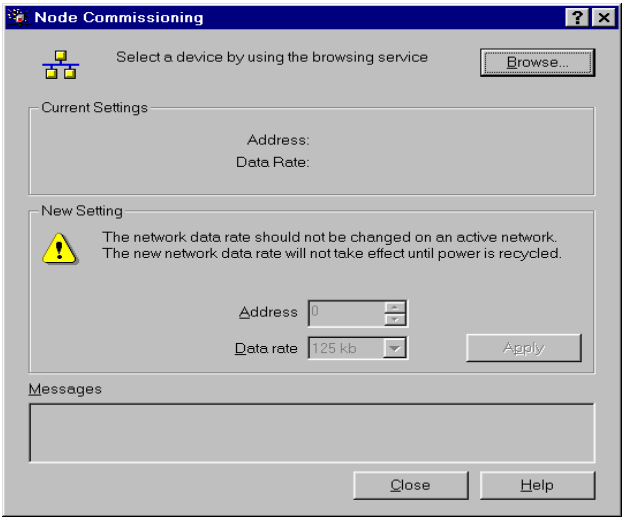

2. Clicking on Browse… will result in a screen similar to the one below to appear:

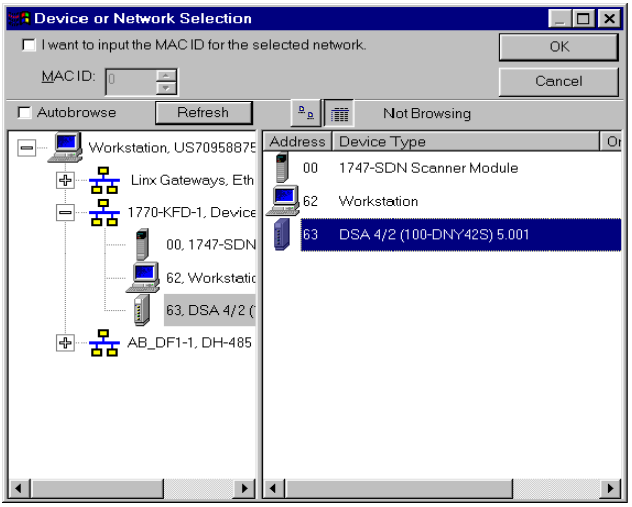

3. Click the DSA icon to select it, and then click **OK**. The Node Commissioning screen will be updated as shown:

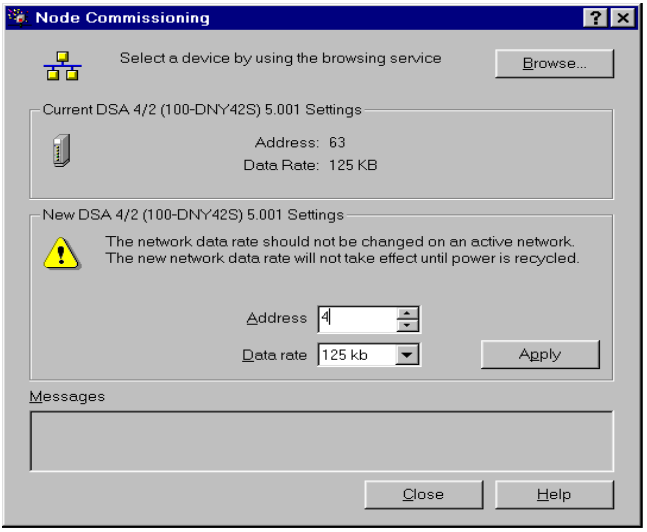

4. Enter the desired Node Address in the "New Settings" section of the window. In the above example, the new node address 4 has been entered. Click the **Apply** button to apply the new node address. When the new Node address has been successfully applied, the "Current Settings" portion of the window will be updated to reflect the new settings. When the new address has been successfully applied, click the **Close** button.

Device Parameter Programming - Consumed and Produced I/O Assemblies

The Consumed I/O Assembly parameter allows the user to select the size and format of data that is consumed by the DSA. This is done by selecting a Consumed I/O Assembly instance number. Consumed I/O Assemblies are sometimes referred to as "Output Assumblies," since the data in the Assumbly is the output of a PLC master, and often contains data that is intended to drive the outputs of a DSA.

The Produced I/O Assembly parameter allows the user to select the size and format of data that is produced by the DSA. This is done by selecting a Produced I/O Assembly instance number. Produced I/O Assemblies are sometimes referred to as "Input Assemblies," since the data is the assembly is a PLC master network input, and often contains the state of the DSA inputs.

The DSA offers the user several Consumed and Produced Assemblies to choose from. Parameter 13 selects the Consumed I/O Assembly and Parameter 14 selects the Produced I/O Assembly.

The settings for Parameters 13 and 14 can be modified in the "Current Value" column of the "Device Parameters" window in RSNetWorx. Editing is done in spreadsheet-like fashion.

Consumed I/O Assemblies

Setting Parameter 13, Consumed I/O Assembly, to the value "32" chooses Consumed I/O Assembly Instance 32 which is the default assembly and has the following data format:

Table 3.A

Byte	Bit 7	Bit 6	Bit 5	Bit 4	Bit 3	Bit 2	Bit 1	Bit 0
0							Output B	Output A

Setting Parameter 13, Consumed I/O Assembly, to the value "183" chooses Consumed I/O Assembly Instance 183 which has the following data format:

Table 3.B

Byte	Bit 7	Bit 6	Bit 5	Bit 4	Bit 3	Bit 2	Bit 1	Bit 0
0	Net In 7	Net In 1	Net In 5	Net In 4	Net In 3	Net In 2	Output B/Net In 1	Output A/Net In 0
1	Net In 15	Net In 14	Net In 13	Net In 12	Net In 11	Net In 10	Net In 9	Net In 8

Produced I/O Assemblies

Setting Parameter 14, Produced I/O Assembly, to the value "3" chooses **Produced I/O Assembly Instance 3**, which has the following data format:

Table 3.C

Byte	Bit 7	Bit 6	Bit 5	Bit 4	Bit 3	Bit 2	Bit 1	Bit 0
0					Input 3	Input 2	Input 1	Input 0

Setting Parameter 14, Produced I/O Assembly, to the value "105" chooses **Produced I/O Assembly Instance 105**, which is the default assembly and has the following data format:

Table 3.D

Byte	Bit 7	Bit 6	Bit 5	Bit 4	Bit 3	Bit 2	Bit 1	Bit 0
0	Input Fault		Output B Fault	Output A Fault	Input 3	Input 2	Input 1	Input 0

Note that the data format of Produced I/O Assembly instance 105 is the same data format that is produced by all Series A 4 input/2output DSAs.

Setting Parameter 14, Produced I/O Assembly, to the value "180" chooses **Produced I/O Assembly Instance 180**, which has the following data format:

Table 3.E

Byte	Bit 7	Bit 6	Bit 5	Bit 4	Bit 3	Bit 2	Bit 1	Bit 0
0					Input 3	Input 2	Input 1	Input 0
1								

Note that the data format of Produced I/O Assembly instance 180 is 2 bytes long which may make it easier to align the data along a word boundary in a PLC.

Setting Parameter 14, Produced I/O Assembly, to the value "181" chooses **Produced I/O Assembly Instance 181**, which has the following data format:

Table 3.F

Byte	Bit 7	Bit 6	Bit 5	Bit 4	Bit 3	Bit 2	Bit 1	Bit 0
0							Output B State	Output A State
1								

Note that the data format of Produced I/O Assembly instance 181 is 2 bytes long which may make it easier to align the data along a word boundary in a PLC.

Setting Parameter 14, Produced I/O Assembly, to the value "182" chooses **Produced I/O Assembly Instance 182**, which has the following data format:

Table 3.G

Byte	Bit 7	Bit 6	Bit 5	Bit 4	Bit 3	Bit 2	Bit 1	Bit 0
0						Output B Fault	Output A Fault	Input Fault
1								

Note that the data format of Produced I/O Assembly instance 182 is 2 bytes long which may make it easier to align the data along a word boundary in a PLC. Setting Parameter 14, Produced I/O Assembly, to the value "184" chooses **Produced I/O Assembly Instance 184**, which has the following data format:

Table 3.H

Byte	Bit 7	Bit 6	Bit 5	Bit 4	Bit 3	Bit 2	Bit 1	Bit 0
0	Net Out 7	Net Out 6	Net Out 5	Net Out 4	Net Out 3	Net Out 2	Net Out 1	Net Out 0
1	Net Out 15	Net Out 14	Net Out 13	Net Out 12	Net Out 11	Net Out 10	Net Out 9	Net Out 8

Setting Parameter 14, Produced I/O Assembly, to the value "185" chooses **Produced I/O Assembly Instance 185**, which has the following data format:

Table 3.I

Byte	Bit 7	Bit 6	Bit 5	Bit 4	Bit 3	Bit 2	Bit 1	Bit 0
0	COS Cnxn Idle	Poll Cnxn Idle	COS Cnxn Faulted	Poll Cnxn Faulted	Explicit Cnxn Fault	COS Cnxn	Poll Cnxn	Explicit Cnxn
1							Module Fault	Network Fault

Setting Parameter 14, Produced I/O Assembly, to the value "186" chooses **Produced I/O Assembly Instance 186**, which has the following data format:

Table 3.J

Byte	Bit 7	Bit 6	Bit 5	Bit 4	Bit 3	Bit 2	Bit 1	Bit 0
0	Function Block 7	Function Block 6	Function Block 5	Function Block 4	Function Block 3	Function Block 2	Function Block 1	Function Block 0
1	Function Block 15	Function Block 14	Function Block 13	Function Block 12	Function Block 11	Function Block 10	Function Block 9	Function Block 8

Setting Parameter 14, *Produced I/O Assembly*, to the value "187" **chooses Produced I/O Assembly Instance 187**, which has the following data format:

Table 3.K

Byte	Bit 7	Bit 6	Bit 5	Bit 4	Bit 3	Bit 2	Bit 1	Bit 0
0	Function Block 7	Function Block 6	Function Block 5	Function Block 4	Function Block 3	Function Block 2	Function Block 1	Function Block 0
1	Function Block 15	Function Block 14	Function Block 13	Function Block 12	Function Block 11	Function Block 10	Function Block 9	Function Block 8

Setting Parameter 14, *Produced I/O Assembly*, to the value "188" **chooses Produced I/O Assembly Instance 188**, which has the following data format:

Table 3.L

Byte	Bit 7	Bit 6	Bit 5	Bit 4	Bit 3	Bit 2	Bit 1	Bit 0
0	Function Block 7	Function Block 6	Function Block 5	Function Block 4	Function Block 3	Function Block 2	Function Block 1	Function Block 0
1	Function Block 15	Function Block 14	Function Block 13	Function Block 12	Function Block 11	Function Block 10	Function Block 9	Function Block 8

Setting Parameter 14, *Produced I/O Assembly*, to the value "100" **chooses Produced I/O Assembly Instance 100**, which has the following data format:

Table 3.M

Byte	Bit 7	Bit 6	Bit 5	Bit 4	Bit 3	Bit 2	Bit 1	Bit 0
0	0	Value pointed to by parameter #15 (low byte)						
1		Value pointed to by parameter #15 (high byte)						
2	1	Value pointed to by parameter #16 (low byte)						
3		Value pointed to by parameter #16 (high byte)						
4	2	Value pointed to by parameter #17 (low byte)						
5		Value pointed to by parameter #17 (high byte)						
6	0	Value pointed to by parameter #18 (low byte)						
7		Value pointed to by parameter #18 (high byte)						

The following steps illustrate how to modify the Produced and Consumed I/O Assembly assignments while using RSNetWorx in the "Online" mode.

1. Double click on the DSA icon representing node address 4 in the RSNetWorx window. The following dialog box appears:

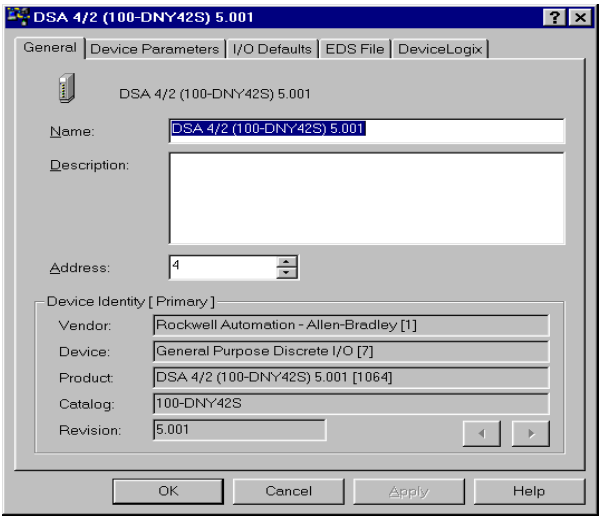

2. Click the "Device Parameters" tab. The following window appears:

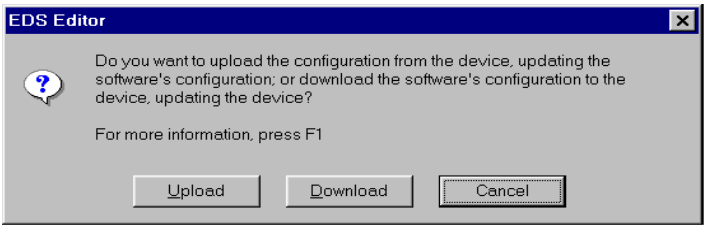

3. Click "**Upload**". This will upload all of the current parameter values from the DSA for display. The following screen appears:

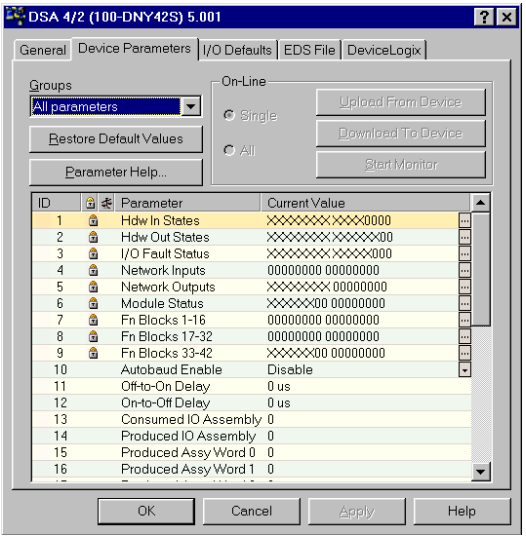

4. Under the "Groups" heading, select the "DNet Setup" group as shown below:

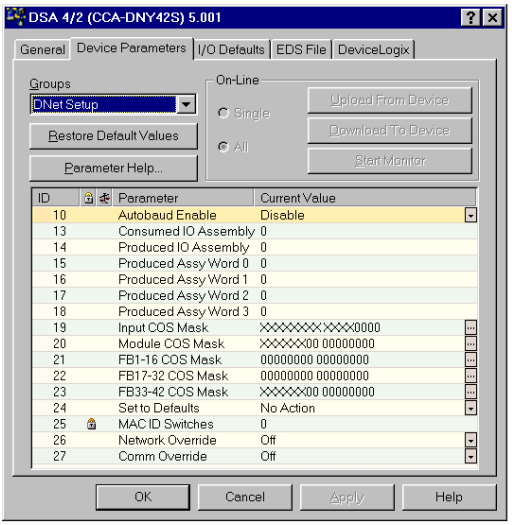

The settings of Parameters 13 and 14 can be modified in the "Current Value" column. Editing is accomplished in spreadsheet fashion.

IMPORTANT It will be helpful when you set up the scanner's scan list in the next section to record the size (in bytes) of the assemblies selected in Parameters 13 and 14.

IMPORTANT While the values of Parameters 13 and 14 can be changed at any time, the data size and format chosen via th new assemblies will not begin to be produced or consumed until the DSA is reset or power to the DSA is cycled.

Clicking the "**Single**" radio button and then clicking the **"Download to Device**" button will update the selected parameters value over the network.

Mapping to the Scanner'sScanlist

The following steps outline how to map a DSA in the scanlist of a 1747-SDN scanner module using RSNetWorx in the "Online" mode.

1. Double-click on the "1747-SDN Scanner Module" icon in the "RSNetWorx for DeviceNet". The following window appears:

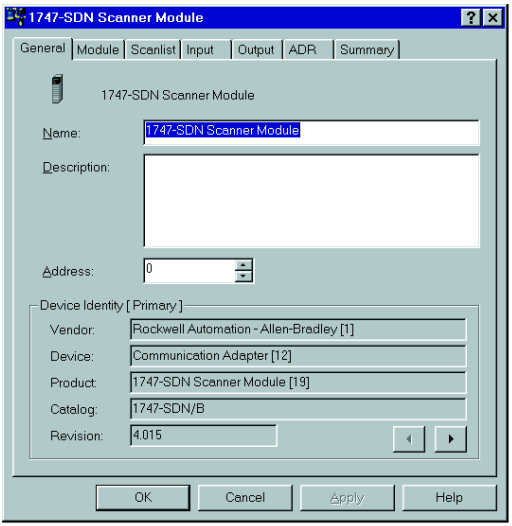

2. Click on the "Scanlist" tab. The following screen will appear:

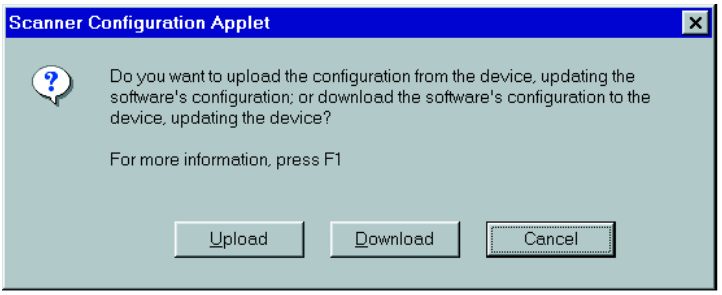

3. Click **Upload**. The following screen will appear while scanlist is uploaded from the scanner:

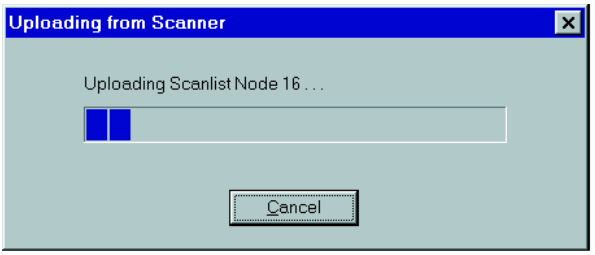

4. When the upload is complete, the following window appears:

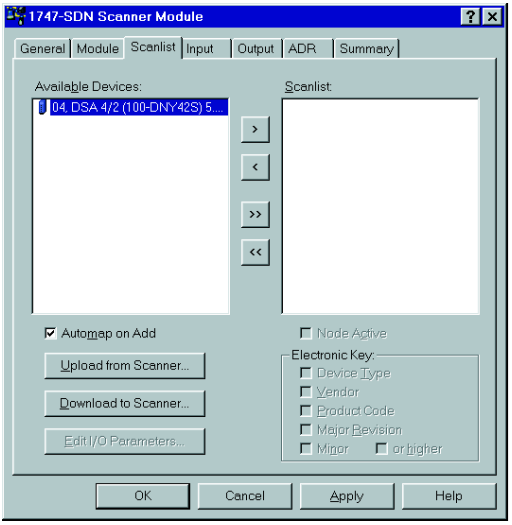

5. Select the device to be mapped (in this case, select the "04, DSA 4/2 (100-DNY42S) 5.001" entry) from the "Available Devices" box, and press the ">" button. This will place the device in the scanlist. For this example, the window will be updated and appear as follows:

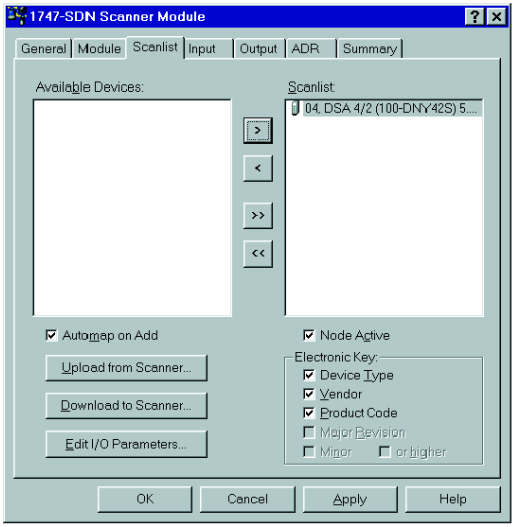

6. Edit the I/O data by either clicking on the DSA in the "Scanlist" box and then clicking "Edit I/O Parameters…", or by double clicking on the DSA in the "Scanlist" box. The following screen appears:

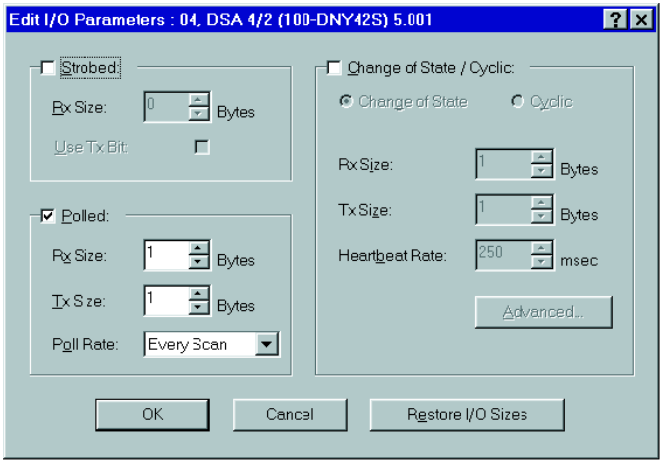

7. To set up a polled connection, enter the following fields:

Table 3.N

Field	Entry
Polled	Enabled (checked)
Rx Size	Equal to DSA Input Assembly size (Produced I/O Assembly size)
Tx Size	Equal to DSA Output Assembly size (Consumed I/O Assembly size)
Poll Rate	Every Scan

The DSA also supports Change of State (COS) and Cyclic I/O connections. These types of connections are set up as follows:

Table 3.O

Field	Entry
Change of State/Cyclic	Enabled (checked)
Rx Size	Equal to DSA Input Assembly size (Produced I/O Assembly size)
Tx Size	Equal to DSA Output Assembly size (Consumed I/O Assembly size)
Heartbeat Rate	As appropriate

After all of the above has been entered, click **OK**.

Input/Output Mapping In the Scanlist

Once devices have been placed in the scanlist, I/O must be mapped.

The easiest way to map the input data is to click select the **Automap on Add** checkbox before adding devices to the scanlist. The following examples assume that the **Automap on Add** checkbox was selected while the DSA was added to the scanlist.

1. Click on the "Input" tab in the 1747-SDN Scanner Module window. The following screen appears:

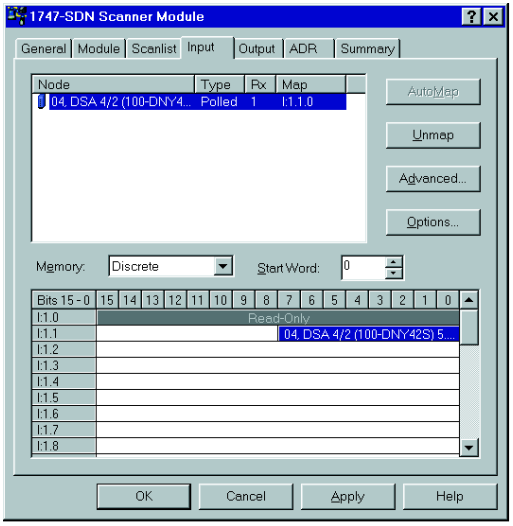

The above window shows that a single byte of input data has been mapped to the low byte of I:1.1. This is where a ladder program would find the contents of the Input Assembly that is chosen in the DSA.

2. Click on the "Output" tab in the 1747-SDN Scanner Module window. The following screen appears:

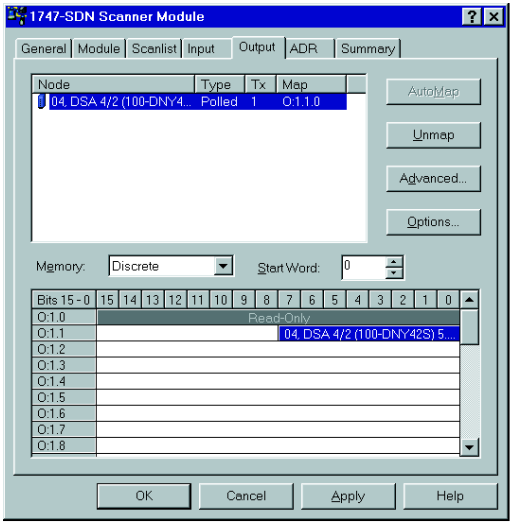

The above window show that a single byte of output data has been mapped to the low byte of O:1.1. This is where a ladder program would place data in the Output Assembly that is chosen in the DSA.

3. The scanlist definition and data mapping are now complete. Click **Apply**. The following alert appears:

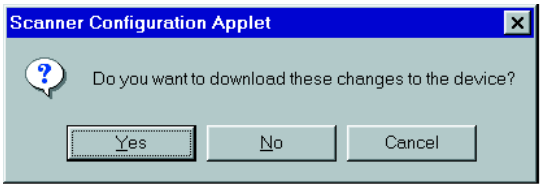

4. Click Yes to initiate the downloading of the scanlist and data mapping to the scanner.

Parameter Descriptions

Chapter Objectives

This chapter describes each programmable configuration and status parameter and its function.

Parameter Programming

Refer to Chapter 3 – Node Commissioning for instructions in using RSNetWorx for DeviceNet to modify parameter settings. The section, Device Parameter Programming – Consumed and Produced I/O Assemblies shows an example of modifying parameters 13 and 14.

IMPORTANT Parameter setting changes made in a configuration tool such as RSNetWorx for DeviceNet do not take effect in the DSA until the installer applies or downloads the new settings to the device.

Parameter Groups

The DSA contains three parameter groups. The parameters in the Monitor Params, DNet Setup, and I/O Setup groups are discussed in this chapter.

Monitor Params	DNet Setup	I/O Setup
1. Hdw In States	10. Autobaud Enable	11. Off-to-On Delay
2. Hdw Out States	13. Consumed Assembly	12. On-to-Off Delay
3. IO Fault States	14. Produced I/O Assembly	28. OutA Fault State
4. Network Inputs	15. Produced I/O Assy Word 0	29. OutA Fault Value
5. Network Outputs	16. Produced I/O Assy Word 1	30. OutA Idle State
6. Module Status	17. Produced I/O Assy Word 2	31. OutA Idle Value
7. Fn Blocks 1-16	18. Produced I/O Assy Word 3	32. OutB Fault State
8. Fn Blocks 17-32	19. Input COS Mask	33. OutB Fault Value
9. Fn Blocks 33-42	20. Module COS Mask	34. OutB Idle State
	21. FB1-16 COS Mask	35. OutB Idle Value
	22. FB17-32 COS Mask	
	23. FB33-42 COS Mask	
	24. Set to Defaults	
	25. MAC ID Switches	
	26. Network Override	
	27. Comm Override	

Monitor Params Group

Hdw In States	Parameter Number	1
This parameter provides status information on the states of the 4 hardware inputs of the DSA. 1 = ON 0 = OFF	Access Rule	Read Only
	Data Type	WORD
	Object Mapping	0x0004-0xB4-0x03
	Group	Monitor Params
	Units	—
	Minimum Value	0000000000000000
	Maximum Value	0000000000001111
	Default Value	0000000000000000

Bit																Function
15	14	13	12	11	10	9	8	7	6	5	4	3	2	1	0	
															X	Input 0
														X		Input 1
													X			Input 2
												X				Input 3

Hdw Out States	Parameter Number	2
This parameter provides status information on the states of the 2 hardware outputs of the DSA. 1 = ON 0 = OFF	Access Rule	Read Only
	Data Type	WORD
	Object Mapping	0x0004-0xB5-0x03
	Group	Monitor Params
	Units	—
	Minimum Value	0000000000000000
	Maximum Value	0000000000000011
	Default Value	0000000000000000

Bit																Function
15	14	13	12	11	10	9	8	7	6	5	4	3	2	1	0	
															X	Output A
														X		Output B

IO Fault Status	Parameter Number	3
This parameter provides status information on the fault status of the DSA inputs and outputs. Note that input faults can only be detected on units with 24V DC inputs, and output faults can only be detected on units with Solid State outputs 1 = FAULTED 0 = NOT FAULTED	Access Rule	Read Only
	Data Type	WORD
	Object Mapping	0x0004-0xB6-0x03
	Group	Monitor Params
	Units	—
	Minimum Value	0000000000000000
	Maximum Value	0000000000000111
	Default Value	0000000000000000

Bit																Function
15	14	13	12	11	10	9	8	7	6	5	4	3	2	1	0	
															X	Input Fault
														X		Output A Fault
													X			Output B Fault

Network Inputs	Parameter Number	4
This parameter provides status information on the states of the network inputs. Network inputs are consumed by a DSA and may be used as inputs to function blocks in a DeviceLogix program. 1 = ON 0 = OFF	Access Rule	Read Only
	Data Type	WORD
	Object Mapping	0x0004-0xB7-0x03
	Group	Monitor Params
	Units	—
	Minimum Value	0000000000000000
	Maximum Value	1111111111111111
	Default Value	0000000000000000

Bit																Function
15	14	13	12	11	10	9	8	7	6	5	4	3	2	1	0	
															X	Network Input 0
														X		Network Input 1
													X			Network Input 2
												X				Network Input 3
											X					Network Input 4
										X						Network Input 5
									X							Network Input 6
								X								Network Input 7
							X									Network Input 8
						X										Network Input 9
					X											Network Input 10
				X												Network Input 11
			X													Network Input 12
		X														Network Input 13
	X															Network Input 14
X																Network Input 15

Network Outputs	Parameter Number	5
This parameter provides status information on the states of the network outputs. DeviceLogix programs can drive the state of network outputs which are in turn produced on the network by the DSA. 1 = ON 0 = OFF	Access Rule	Read Only
	Data Type	WORD
	Object Mapping	0x0004-0xB8-0x03
	Group	Monitor Params
	Units	—
	Minimum Value	0000000000000000
	Maximum Value	0000000011111111
	Default Value	0000000000000000

Bit																Function
15	14	13	12	11	10	9	8	7	6	5	4	3	2	1	0	Network Output 0
															X	Network Output 0
														X		Network Output 0
													X			Network Output 0
												X				Network Output 0
											X					Network Output 0
										X						Network Output 0
									X							Network Output 0

Module Status	Parameter Number	6
This parameter provides status information on the state of the DSA as outlined in the table below. 1 = ON or Present 0 = OFF or Not Present	Access Rule	Read Only
	Data Type	WORD
	Object Mapping	0x0004-0xB9-0x03
	Group	Monitor Params
	Units	—
	Minimum Value	0000000000000000
	Maximum Value	0000001111111111
	Default Value	0000000000000000

Bit																Function
15	14	13	12	11	10	9	8	7	6	5	4	3	2	1	0	
															X	Exp Cnxn Exists
														X		Poll Cnxn Exists
													X			COS Cnxn Exists
												X				Exp Cnxn Fault
											X					Poll Cnxn Fault
										X						COS Cnxn Fault
									X							Poll Cnxn Idle
								X								COS Cnxn Idle
							X									Network Fault
						X										Module Fault

Fn Blocks 1…16	Parameter Number	7
This parameter provides status information on the state of Function Blocks 1…16. 1 = ON 0 = OFF	Access Rule	Read Only
	Data Type	WORD
	Object Mapping	0x0004-0xBA-0x03
	Group	Monitor Params
	Units	—
	Minimum Value	0000000000000000
	Maximum Value	1111111111111111
	Default Value	0000000000000000

Bit																Function
15	14	13	12	11	10	9	8	7	6	5	4	3	2	1	0	
															X	FB 1 Output
														X		FB 2 Output
													X			FB 3 Output
												X				FB 4 Output
											X					FB 5 Output
										X						FB 6 Output
									X							FB 7 Output
								X								FB 8 Output
							X									FB 9 Output
						X										FB 10 Output
					X											FB 11 Output
				X												FB 12 Output
			X													FB 13 Output
		X														FB 14 Output
	X															FB 15 Output
X																FB 16 Output

Fn Blocks 17…32	Parameter Number	8
This parameter provides status information on the state of Function Blocks 17…32. 1 = ON 0 = OFF	Access Rule	Read Only
	Data Type	WORD
	Object Mapping	0x0004-0xBB-0x03
	Group	Monitor Params
	Units	—
	Minimum Value	0000000000000000
	Maximum Value	1111111111111111
	Default Value	0000000000000000

Bit																Function
15	14	13	12	11	10	9	8	7	6	5	4	3	2	1	0	
															X	FB 17 Output
														X		FB 18 Output
													X			FB 19 Output
												X				FB 20 Output
											X					FB 21 Output
										X						FB 22 Output
									X							FB 23 Output
								X								FB 24 Output
							X									FB 25 Output
						X										FB 26 Output
					X											FB 27 Output
				X												FB 28 Output
			X													FB 29 Output
		X														FB 30 Output
	X															FB 31 Output
X																FB 32 Output

Fn Blocks 33…42	Parameter Number	9
This parameter provides status information on the state of Function Blocks 33…42. 1 = ON 0 = OFF	Access Rule	Read Only
	Data Type	WORD
	Object Mapping	0x0004-0xBC-0x03
	Group	Monitor Params
	Units	—
	Minimum Value	0000000000000000
	Maximum Value	0000001111111111
	Default Value	0000000000000000

Bit																Function
15	14	13	12	11	10	9	8	7	6	5	4	3	2	1	0	
															X	FB 33 Output
														X		FB 34 Output
													X			FB 35 Output
												X				FB 36 Output
											X					FB 37 Output
										X						FB 38 Output
									X							FB 39 Output
								X								FB 40 Output
							X									FB 41 Output
						X										FB 42 Output

DNet Setup Group

Autobaud Enable	Parameter Number	10
When this parameter is enabled, the device will attempt to determine the network baud rate and set its baud rate to the same, provided network traffic exists. At least one node with an established baud rate must exist on the network for autobaud to occur.	Access Rule	Read/Write
	Data Type	BOOL
	Object Mapping	0x00B4-0x01-0x0F
	Group	DNet Setup
	Units	—
	Minimum Value	0 = Disable
	Maximum Value	1 = Enable
	Default Value	1 = Enable

Consumed I/O Assembly	Parameter Number	13
This parameter is used to select the desired consumed I/O assembly. The user may choose from the following valid assemblies: 32 – Default DSA Output Assembly (1 byte) 183 – Network Input Assembly (2 bytes)	Access Rule	Read/Write
	Data Type	USINT
	Object Mapping	0x00B4-0x01-0x10
	Group	DNet Setup
	Units	—
	Minimum Value	0
	Maximum Value	183
	Default Value	32

Produced I/O Assembly	Parameter Number	14
This parameter is used to select the desired produced I/O assembly. The user may choose from the following valid assemblies 3 – ODVA Input Assembly (1 byte) 100 – Parameter-Based Assembly (0, 2, 4, 6 or 8 bytes) 105 – Default DSA Input Assembly (1 byte) 180 – Hardware Input Assembly (2 bytes) 181 – Hardware Output Status Assembly (2 bytes) 182 – I/O Fault Status Assembly (2 bytes) 184 – Network Outputs Assembly (2 bytes) 185 – Module Status Assembly (2 bytes) 186 – Function Block 1…16 Assembly (2 bytes) 187 – Function Block 17…32 Assembly (2 bytes) 188 – Function Block 33…42 Assembly (2 bytes)	Access Rule	Read/Write
	Data Type	USINT
	Object Mapping	0x00B4-0x01-0x11
	Group	DNet Setup
	Units	—
	Minimum Value	0
	Maximum Value	188
	Default Value	105

Produced I/O Assy Word 0	Parameter Number	15
This parameter assigns the parameter value to be placed in Word 0 of Produced I/O Assembly 100.	Access Rule	Read/Write
	Data Type	USINT
	Object Mapping	0x00B4-0x01-0x07
	Group	DNet Setup
	Units	—
	Minimum Value	0
	Maximum Value	9
	Default Value	1

Produced I/O Assy Word 1	Parameter Number	16
This parameter assigns the parameter value to be placed in Word 1 of Produced I/O Assembly 100.	Access Rule	Read/Write
	Data Type	USINT
	Object Mapping	0x00B4-0x01-0x08
	Group	DNet Setup
	Units	—
	Minimum Value	0
	Maximum Value	9
	Default Value	3

Produced I/O Assy Word 2	Parameter Number	17
This parameter assigns the parameter value to be placed in Word 2 of Produced I/O Assembly 100.	Access Rule	Read/Write
	Data Type	USINT
	Object Mapping	0x00B4-0x01-0x09
	Group	DNet Setup
	Units	—
	Minimum Value	0
	Maximum Value	9
	Default Value	5

Produced I/O Assy Word 3	Parameter Number	18
This parameter assigns the parameter value to be placed in Word 3 of Produced I/O Assembly 100.	Access Rule	Read/Write
	Data Type	USINT
	Object Mapping	0x00B4-0x01-0x0A
	Group	DNet Setup
	Units	—
	Minimum Value	0
	Maximum Value	9
	Default Value	6

Input COS Mask	Parameter Number	19
This parameter allows the installer to define the change of state conditions that will result in a change of state message being produced. 1 = Enabled 0 = Disabled	Access Rule	Read/Write
	Data Type	WORD
	Object Mapping	0x00B4-0x01-0x0D
	Group	DNet Setup
	Units	—
	Minimum Value	0000000000000000
	Maximum Value	0000000000001111
	Default Value	0000000000001111

Bit																Function
15	14	13	12	11	10	9	8	7	6	5	4	3	2	1	0	
															X	Input 0
														X		Input 1
													X			Input 2
												X				Input 3

Module COS Mask	Parameter Number	20
This parameter allows the installer to define the change of state conditions that will result in a change of state message being produced. 1 = Enabled 0 = Disabled	Access Rule	Read/Write
	Data Type	WORD
	Object Mapping	0x00B4-0x01-0x28
	Group	DNet Setup
	Units	—
	Minimum Value	0000000000000000
	Maximum Value	0000001111111111
	Default Value	0000000000000000

Bit																Function
15	14	13	12	11	10	9	8	7	6	5	4	3	2	1	0	
															X	Exp Cnxn Exists
														X		Poll Cnxn Exists
													X			COS Cnxn Exists
												X				Exp Cnxn Fault
											X					Poll Cnxn Fault
										X						COS Cnxn Fault
									X							Poll Cnxn Idle
								X								COS Cnxn Idle
							X									Network Fault
						X										Module Fault

FB1-16 COS Mask	Parameter Number	21
This parameter allows the installer to define the change of state conditions that will result in a change of state message being produced. 1 = Enabled 0 = Disabled	Access Rule	Read/Write
	Data Type	WORD
	Object Mapping	0x00B4-0x01-0x29
	Group	DNet Setup
	Units	—
	Minimum Value	0000000000000000
	Maximum Value	1111111111111111
	Default Value	0000000000000000

Bit																Function
15	14	13	12	11	10	9	8	7	6	5	4	3	2	1	0	
															X	FB 1 Output
														X		FB 2 Output
													X			FB 3 Output
												X				FB 4 Output
											X					FB 5 Output
										X						FB 6 Output
									X							FB 7 Output
								X								FB 8 Output
							X									FB 9 Output
						X										FB 10 Output
					X											FB 11 Output
				X												FB 12 Output
			X													FB 13 Output
		X														FB 14 Output
	X															FB 15 Output
X																FB 16 Output

FB17-23 COS Mask	Parameter Number	22
This parameter allows the installer to define the change of state conditions that will result in a change of state message being produced. 1 = Enabled 0 = Disabled	Access Rule	Read/Write
	Data Type	WORD
	Object Mapping	0x00B4-0x01-0x2A
	Group	DNet Setup
	Units	—
	Minimum Value	0000000000000000
	Maximum Value	1111111111111111
	Default Value	0000000000000000

Bit																Function
15	14	13	12	11	10	9	8	7	6	5	4	3	2	1	0	
															X	FB 17 Output
														X		FB 18 Output
													X			FB 19 Output
												X				FB 20 Output
											X					FB 21 Output
										X						FB 22 Output
									X							FB 23 Output
								X								FB 24 Output
							X									FB 25 Output
						X										FB 26 Output
					X											FB 27 Output
				X												FB 28 Output
			X													FB 29 Output
		X														FB 30 Output
	X															FB 31 Output
X																FB 32 Output

FB33-42 COS Mask	Parameter Number	23
This parameter allows the installer to define the change of state conditions that will result in a change of state message being produced. 1 = Enabled 0 = Disabled	Access Rule	Read/Write
	Data Type	WORD
	Object Mapping	0x00B4-0x01-0x2B
	Group	DNet Setup
	Units	—
	Minimum Value	0000000000000000
	Maximum Value	0000001111111111
	Default Value	0000000000000000

Bit																Function
15	14	13	12	11	10	9	8	7	6	5	4	3	2	1	0	
															X	FB 33 Output
														X		FB 34 Output
													X			FB 35 Output
												X				FB 36 Output
											X					FB 37 Output
										X						FB 38 Output
									X							FB 39 Output
								X								FB 40 Output
							X									FB 41 Output
						X										FB 42 Output

IMPORTANT Setting the "Set to Defaults" parameter will clear any DeviceLogix program in the DSA.

Set to Defaults	Parameter Number	24
This parameter allows the installer to reset all parameter settings to the factory default values. After parameter values have been reset to the factory default settings, the parameter automatically returns to the "No Action" state. 1 = Set to Defaults 0 = No Action	Access Rule	Read/Write
	Data Type	BOOL
	Object Mapping	0x00B4-0x01-0x13
	Group	DNet Setup
	Units	—
	Minimum Value	0
	Maximum Value	1
	Default Value	0

MAC ID Switches	Parameter Number	25
This parameter reflects the decimal value of the rotary MAC ID switches on the side of the DSA.	Access Rule	Read Only
	Data Type	USINT
	Object Mapping	0x0003-0x01-0x08
	Group	DNet Setup
	Units	—
	Minimum Value	0
	Maximum Value	99
	Default Value	99

Network Override	Parameter Number	26
Enabling this parameter allows local logic to override normal output behavior in the event of a network fault. Network faults include duplicate Mac ID failure and bus off conditions. The default is “Disabled.”	Access Rule	Read/Write
	Data Type	BOOL
	Object Mapping	0x001E-0x01-0x68
	Group	DNet Setup
	Units	—
	Minimum Value	0
	Maximum Value	1
	Default Value	0

Comm Override	Parameter Number	27
Enabling this parameter allows local logic to override normal output behavior in the event of a communication status change. These events include all states where the module is without an I/O connection. This can happen if an I/O connection does not exist, has timed out, has been deleted or is currently idle. The default is “Disabled.”	Access Rule	Read/Write
	Data Type	BOOL
	Object Mapping	0x001E-0x01-0x69
	Group	DNet Setup
	Units	—
	Minimum Value	0
	Maximum Value	1
	Default Value	0

I/O Setup Group

Off-to-On Delay	Parameter Number	11
This parameter defines the time necessary for the DSA to recognize an off to on transition of a hardware input signal. The value is set in units of microseconds. Valid values are: 0: No delay 1000: 1 ms delay 2000: 2 ms delay 4000: 4 ms delay 8000: 8 ms delay 16000: 16 ms delay	Access Rule	Read/Write
	Data Type	UINT
	Object Mapping	0x001D-0x01-0x06
	Group	IO Setup
	Units	microseconds (µs)
	Minimum Value	0
	Maximum Value	16000
	Default Value	2000

On-to-Off Delay	Parameter Number	12
This parameter defines the time necessary for the DSA to recognize an on to off transition of a hardware input signal. The value is set in units of microseconds. Valid values are: 0:No delay 1000: 1 ms delay 2000: 2 ms delay 4000: 4 ms delay 8000: 8 ms delay 16000: 16 ms delay	Access Rule	Read/Write
	Data Type	UINT
	Object Mapping	0x001D-0x01-0x07
	Group	IO Setup
	Units	microseconds (µs)
	Minimum Value	0
	Maximum Value	16000
	Default Value	2000

OutA Fault State	Parameter Number	28
This parameter in conjunction with parameter 29 defines how Output A will respond when a DeviceNet fault occurs. When set to 1, Output A will hold the state prior to the fault occurrence. When set to 0, Output A will open or close as determined by the setting of parameter 29.	Access Rule	Read/Write
	Data Type	BOOL
	Object Mapping	0x0009-0x01-0x05
	Group	IO Setup
	Units	—
	Minimum Value	0
	Maximum Value	1
	Default Value	0

OutA Fault Value	Parameter Number	29
This parameter determines the state that Output A assumes when a DeviceNet network fault occurs and parameter 28 is set to "0".	Access Rule	Read/Write
	Data Type	BOOL
	Object Mapping	0x0009-0x01-0x06
	Group	IO Setup
	Units	—
	Minimum Value	0
	Maximum Value	1
	Default Value	0

OutA Idle State	Parameter Number	30
This parameter in conjunction with parameter 31 defines how Output A will respond when the DeviceNet network is idle. When set to 1, Output A will hold the state prior to the idle condition. When set to 0, Output A will open or close as determined by the setting of parameter 31.	Access Rule	Read/Write
	Data Type	BOOL
	Object Mapping	0x0009-0x01-0x07
	Group	IO Setup
	Units	—
	Minimum Value	0
	Maximum Value	1
	Default Value	0

OutA Idle Value	Parameter Number	31
This parameter determines the state that Output A assumes when the network is in idle mode and parameter 30 is set to "0".	Access Rule	Read/Write
	Data Type	BOOL
	Object Mapping	0x0009-0x01-0x08
	Group	IO Setup
	Units	—
	Minimum Value	0
	Maximum Value	1
	Default Value	0

OutB Fault State	Parameter Number	32
This parameter in conjunction with parameter 33 defines how Output B will respond when a DeviceNet fault occurs. When set to 1, Output B will hold the state prior to the fault occurrence. When set to 0, Output B will open or close as determined by the setting of parameter 33	Access Rule	Read/Write
	Data Type	BOOL
	Object Mapping	0x0009-0x02-0x05
	Group	IO Setup
	Units	—
	Minimum Value	0
	Maximum Value	1
	Default Value	0

OutB Fault Value	Parameter Number	33
This parameter determines the state that Output B assumes when a DeviceNet network fault occurs and parameter 32 is set to "0"	Access Rule	Read/Write
	Data Type	BOOL
	Object Mapping	0x0009-0x02-0x06
	Group	IO Setup
	Units	—
	Minimum Value	0
	Maximum Value	1
	Default Value	0

OutB Idle State	Parameter Number	34
This parameter in conjunction with parameter 35 defines how Output B will respond when the DeviceNet network is idle. When set to 1, Output B will hold the state prior to the idle condition. When set to 0, Output B will open or close as determined by the setting of parameter 35.	Access Rule	Read/Write
	Data Type	BOOL
	Object Mapping	0x0009-0x02-0x07
	Group	IO Setup
	Units	—
	Minimum Value	0
	Maximum Value	1
	Default Value	0

OutB Idle Value	Parameter Number	35
This parameter determines the state that Output B assumes when the network is in idle mode and parameter 34 is set to “0”.	Access Rule	Read/Write
	Data Type	BOOL
	Object Mapping	0x0009-0x02-0x08
	Group	IO Setup
	Units	—
	Minimum Value	0
	Maximum Value	1
	Default Value	0

Explicit Messaging

Introduction

DeviceNet Explicit messages are generally used to configure a DeviceNet device. Configuration Tools such as "RSNetWorx for DeviceNet" use Explicit Messages when communicating with a device. Some tools, such as Rockwell Software's "RSLinx" use Explicit Messages to help build custom DeviceNet system user interfaces for a PC. When using such a tool, it is often useful to be able to control a DSA output or read the status of a DSA input using Explicit Messaging

Explicit messages contain the following information:

- **Service**: Tells the device what action to take in response to a message. Services read information from a device and write information to a device.
- **Class**: Tells the device which object class to send the service to. Classes are identified by their numeric "class code". Chapter 7 contains a complete list of classes that are implemented in the DSA.
- **Instance**: Each Object class can contain one or more "instances" of that class in a given device. Instances are numbered starting at instance 1. The value "0" refers to the class itself, not any individual instance of that class. Chapter 7 contains a complete list of instances that are implemented for each class in the DSA.
- **Attribute**: An attribute is a single piece of information related to an object class or instance. Attributes are numbered starting at attribute number 1. Note that attributes need not be numbered sequentially. Chapter 7 contains a complete list of attributtes for each class and instance implemented in the DSA.

Reading Input Status

Each input in the DSA is represented by a single instance of the class "Discrete Input Point" (class code 8). Input 0 is represented by instance 1, Input 1 is represented by instance 2, etc. Each instance contains an attribute named "Value" (attribute 3), which contains the ON/OFF status of that input. Therefore, reading the input status of input 0 can be done by sending an explicit message with the following information:

- **Service**: Get_Attribute_Single (service code 0E hex).
- **Class**: "Discrete Input Point" (class code 8).
- **Instance**: 1 (since we want to read input 0)
- **Attribute**: "Value" (attribute number 3).

Turning the Outputs ON or OFF

Each output in the DSA is represented by a single instance of the class "Discrete Output Point" (class code 9), Output A is represented by instance 1 and Output B is represented by instance 2. Each instance contains an attribute named "Value" (attribute 3), which is used to turn the output ON or OFF, Therefore, controlling Output A can be done by sending an explicit message with the following information:

- **Service**: Set_Attribute_Single (service code 10 hex).
- **Class**: "Discrete Output Point" (class code 9).
- **Instance**: 1 (since we want to read output A)
- **Attribute**: "Value" (attribute number 3).

There are a few special rules to keep in mind when trying to control an output with explicit messages:

1. An output cannot be controlled via explicit messaging if a DeviceNet I/O connection exists and is sending "live" data to the DSA. For example, if a DeviceNet scanner has control of a DSA, then an explicit message attempting to control an output will result in the DSA returning an error response in response to the message, and the output will not change state.

2. An output cannot be controlled via explicit messaging unless the explicit connection has a non-zero Expected Packet Rate. (See Chapter 7 for details on the explicit message connection object instance.)

Troubleshooting

Chapter Objectives

The purpose of this chapter is to help you troubleshoot DSAs using the LEDs on the front of the unit.

ATTENTION

Servicing energized industrial control equipment can be hazardous. Electrical shock, burns, or unintentional actuation of controlled industrial equipment may cause death or serious injury. Follow the safety-related practices of NPFA 70E, Electrical Safety for Employee Workplaces, when working on or near energized equipment. Do not work alone on energized equipment.

Advisory LEDs

The DSA provides the following advisory LED indicators:

Input 0, 1, 2 and 3 LEDs

The Input 0, 1, 2, and 3 LEDs illuminate when a user connected contact is closed (when the inputs are turned ON). On 24V DC modules, the Module/Network Status LED will blink red when V+ is shorted to NEG. While a short circuit condition exists, and the Module/Network status LED will blink red, an “Input Fault” is reported on the network, and the Input Values for all 4 inputs is reported as ON over the network. When the fault condition is removed, the Input LEDs continue to reflect the state of the DSA inputs, and “Input Fault” is no longer reported on the network.

Output A and B LEDs

The Output A and Output B LEDs illuminate when the output is commanded ON and has successfully turned ON. On Solid State Output modules, when pins 1 and 2 are shorted on the output connector, an Output A Fault is generated and the Output A LED is illuminated “red”. When pins 1 and 3 are shorted on the output connector, an Output B Fault is generated and the Output B LED is illuminated “red”. Output Fault conditions are also reported on the network. When the fault condition is removed, the Output LED will continue to reflect the state of the Output, and an “Output Fault” is no longer reported on the network

Understanding the Module/Network Status LED

The Module/Network Status LED provides status information on the state of the DSA module and its DeviceNet communications. The table below shows how to use the LED to detect and correct common operation problems.

Color	State	What it Means	What to Do
None		The DSA is not receiving power at the DeviceNet connector.	Check DeviceNet power and cable connections and the power connection on the DeviceNet connector.
None		The DSA has not detected the network baud rate while "autobauding."	Make sure there is at least one node on the network at a fixed baud rate.
Red	Solid	Diagnostics test failed on power-up/ reset. Internal fault exists.	Cycle power to the unit and network. If the fault still exists return the DSA for repair
Red	Solid	Duplicate DeviceNet node address exists. Two DeviceNet nodes cannot have the same address.	Change the value MAC ID to a valid address and reset the device.
Red	Solid	Invalid baud rate	This problem can only occur if P10 – [AutoBaudEnable] is set to FALSE. Set P10 – [AutoBaudEnable] to TRUE and reset the DSA. OR Set the baud rate using a DeviceNet configuration tool such as RSNetWorx to the correct baud rate and reset the DSA.
Red	Flashing	I/O Connection Timed Out.	Reset DeviceNet master device
Red	Flashing	Input or Output Faulted	This is probably the problem if any of the Input or Output LEDs are illuminating "amber". Check for improper wiring at the Input or Output Connector Terminals.
Red	Flashing	Illegal DeviceLogix Program	An illegal or incomplete DeviceLogix program has been downloaded to the DSA. Clear the DeviceLogix program using the RSNetWorx DeviceLogix editor.
Red	Flashing	Illegal configuration assembly valve has been kownloaded to the assembly instance 176.	Check values in assembly instance 176 and re-download. OR Set the DSA to the default configuration.
Green	Solid	Normal operating state and DSA is allocated to a master	No action required
Green	Flashing	DSA is on-line but not allocated to a master	Check DeviceNet master for correct scanner configuration.

Specifications

General

Electrical	
DeviceNet Supply Voltage	11…25V DC
DeviceNet Input Current	Maximum 270 mA
Surge Current at Powerup	Less than 3 A for 5 ms
DeviceNet Power Consumption	3 W maximum
Environmental	
Ambient Temperature Operating Storage	 -25…+60° C (-32…+140° F) -40…+85° C (-40…+185° F)
Relative Humidity	0…95% non-condensing
Vibration	2.5 g @ 10…500 Hz
Shock Operating Storage	 30 g peak acceleration 50 g peak acceleration
Communications	
DeviceNet Baud Rates	125, 250, 500 kbps
Distance Max. 125 kbps 250 kbps 500 kbps	 500 m (1640 ft) 200 m (650 ft) 100 m (325 ft)
Approvals	
Agency Certification	CSA certified UL listed CE marked for all applicable directives

General, Continued

Terminal Block	
Plugs: Pitch 5 and 5.08 mm Connection Capacity Solid/Stranded/ Conductor Sizes Stranded with Ferrules with/without Plastic collar	 0.2…2.5 mm^2/0.2…2.5 mm^2/ #24…12 AWG 0.25…2.5 mm^2/0.25…2.5 mm^2
Multiple Connection (2 conductors with same cross section) Solid/Stranded Stranded with Ferrules without Plastic collar Stranded with TWIN ferrules with plastic collar	 0.2…1 mm^2/ 0.2…1.5mm^2 0.25 …1 mm^2 0.5…1.5mm^2
Headers: Pitch 5 and 5.08mm Voltage Current	 300V 5 A
Wire Details	
Wire Type Tightening Torque Wire Size	Use 75°C copper wire minimum 0.5 …0.6 Nm (4.4…5.3 lb-in) 2.5 mm^2 (#14 AWG)

DeviceLogix

Maximum Function Blocks	42	
Boolean Function Blocks		Inputs
	AND	2,3 or 4
	OR	2 ,3 or 4
	NOT	1
	NAND	2, 3 or 4
	NOR	2, 3 or 4
	XNOR	2, 3 or 4
	XOR	2, 3, or 4
Latch Function Blocks		
	RS Latch	Reset Dominant
	SR Latch	Set Dominant
Counter Function Blocks		
	Up Counter	
	Up/Down Counter	
Timer Function Blocks		
	Pulse Timer	
	On Delay	
	Off Delay Timer	
Execution Time	16 Function Blocks per millisecond	

Inputs

Table 7.A Cat. Nos. 100-DNY41R

Inputs per Device		4 : 100-DNY41R 2 : 100-DNY21R
On-State Voltage Range	50/60 Hz	80…132V AC
On-State Current	Maximum Minimum	2 mA 1.2 mA
Off-State Voltage	Maximum	40V AC
Off-State Current	Minimum	0.6 mA
Transition Voltage		40…79V AC
Transition Current		0.6…1.2 mA

Table 7.B Cat. Nos. 100-DNY42R, 100-DNY42S

Inputs per Device		4 : 100-DNY42R, 100-DNY42S 2 : 100-DNY22R, 100-DNY22S
On State Voltage Range		1…30V DC
On State Current	Maximum Minimum	11 mA @ 30V 3 mA @ 10V
Off State Voltage	Maximum	5V DC
Off State Current	Maximum	1.5 mA
Transition Voltage		5…10V DC
Transition Current		1.5…3 mA
Sensor Source	Voltage Current	19… 25V DC 35 mA

Outputs

Table 7.C Cat. Nos. 100-DNY41R, 100-DNY42R (Relay Output)

Outputs per Device		2: 100-DNY41R, 100-DNY42R 1: 100-DNY21R, 100-DNY22R
Outputs Voltage Range	Maximum	240V AC, 30V DC
Switching Capacity	Maximum	3600 VA UL: B300 IEC: AC-15, 5A
Thermal Continuous Current (per output)	Maximum	5 A

Table 7.D Cat. Nos. 100-DNY42S (Solid-State Output)

Outputs per Device		2: 100-DNY42S 1: 100-DNY22S
Output Voltage Range		15…30V DC, ± 0%
On-State Voltage Drop	Maximum	0.25V @ 2 A
On-State Current (per output)	Maximum	2 A per output
Off-State Leakage Current	Maximum	1.5 mA
Surge Current (per output)		4 A for 50 ms

DeviceNet Information

Chapter Objectives

This chapter outlines the DeviceNet message types, class services, and objects that are supported by the DSA

DeviceNet Message Types

The DSA supports Explicit messaging, Polled I/O messaging, and Change of State/Cyclic messaging of the predefined master/slave connection set. The DSA also supports "Group 4 Faulted Node Recovery" messaging.

The DSA supports the following message types

Table 8.A DeviceNet Messages

CAN Identifier Field	Message Type
10xxxxxx111	Duplicate MAC ID Check Messages
10xxxxxx110	Unconnected Explicit Request Messages
10xxxxxx101	Master Poll Command/ COS Messages
10xxxxxx100	Master Explicit Request Messages
10xxxxxx011	Slave Explicit Response Messages
10xxxxxx010	Master COS Acknowledge Messages
01111xxxxxx	Slave Poll Response Messages
01101xxxxxx	Slave COS Messages
11111101100	Communication Faulted Response
11111101101	Communication Faulted Request

The DSA supports the following object classes

Table 8.B Object Classes

Class Code	Object
0x0001	Identity
0x0003	DeviceNet
0x0004	Assembly
0x0005	Connection
0x0008	Discrete Input Point
0x0009	Discrete Output Point
0x001D	Discrete Input Group
0x001E	Discrete Output Group
0x002B	Acknowledge Handler
0x00B4	DN Interface Object
0x00C2	PCP Object

Identity Object - Class Code 0x0001

The Identity Object provides identification and general information about the device.

Class Attributes — None

Instance 1 Attributes

Attribute ID	Access Rule	Name	Data Type	Value
1	Get	Vendor	UINT	1
2	Get	Device Type	UINT	7
3	Get	Product Code	UINT	1060 100-DNY41R 1062 100-DNY42R 1064 100-DNY42S
4	Get	Revision Major Revision Minor Revision	Structure of: USINT USINT	 5 1
5	Get	Status	WORD	0=not owned 1=owned by master
6	Get	Serial Number	UDINT	unique number for each device
7	Get	Product Name String Length ASCII String	Structure of: USINT STRING	 14 “DSA 4-in/2-out”
9	Get	Configuration Consistency Value	UINT	Unique value depending on output of the parameter checksum algorithm.

Services

Service Code	Implemented for		Service Name
	Class	Instance	
0x0E	No	Yes	Get_Attribute_Single
0x05	No	Yes	Reset (DeviceNet only)

DeviceNet Object – Class Code 0x0003

The DeviceNet Object provides configuration and status information for the device.

Class Attributes

Attribute ID	Access Rule	Name	Data Type	Value
1	Get	Revision	UINT	2

Instance Attributes:

Attribute ID	Access Rule	Name	Data Type	Value
1	Get/Set	MAC ID	USINT	0…63
2	Get/Set	Baud Rate	USINT	0 = 125 K baud 1 = 250 K baud 2 = 500 K baud
5	Get	Allocation Information Allocation Choice Byte ❶ Master's MAC ID	Structure of: BYTE USINT	Allocation byte* 0…63 = address 255=unallocated
6	Get	MAC ID Switch Changed	BOOL	0=No Change 1=Changed since last reset of power-up
8	Get	MAC ID Switch Value	BOOL	0…63
100	Get/Set	Auto Baud Disable	BOOL	1=Disable 0=Enable

❶ Allocation byte:

Bit 0	Explicit messaging
Bit 1	polled I/O
Bit 4	Change-of-State I/O
Bit 5	Cyclic I/O
Bit 6	Acknowledge Suppress I/O

Services

Service Code	Implemented for		Service Name
	Class	Instance	
0x0E	Yes	Yes	Get_Attribute_Single
0x10	No	Yes	Set_Attribute_Single
0x4B	No	Yes	Allocate_Master/Slave _Connection_Set
0x4C	No	Yes	Release_Master/Slave _Connection_Set

Assembly Object – Class Code 0x04

Class Attributes

Attribute ID	Access Rule	Name	Data Type	Value
2	Get	Max Instance	UINT	188

Output Assembly Instances

Output Assemblies are collections of data that are the output of a network master. The data contained in output assemblies is data that is consumed by the DSA.

Instance 32 (used by 4-in/2-out devices only)								
Byte	Bit 7	Bit 6	Bit 5	Bit 4	Bit 3	Bit 2	Bit 1	Bit 0
0							OutA	OutA

Instance 183 (Network Inputs used by all devices)								
Byte	Bit 7	Bit 6	Bit 5	Bit 4	Bit 3	Bit 2	Bit 1	Bit 0
0	Net In 8	Net In 7	Net In 6	Net In 5	Net In 1	Net In 3	OutB / Net In 2	OutA / Net In 1
1	Net In 16	Net In 15	Net In 14	Net In 13	Net In 12	Net In 11	Net In 10	Net In 9

Input Assembly Instances

Input Assemblies are collections of data that are the input of a network master. The data contained in input assemblies is data that is produced by the DSA.

Instance 3 (used by 4-in/2-out devices only)								
Byte	Bit 7	Bit 6	Bit 5	Bit 4	Bit 3	Bit 2	Bit 1	Bit 0
0					Input 4	Input 3	Input 2	Input1

Instance 100 (Custom Parameter-Based Input Assemply)		
Word	Byte	Value
0	0	Value of parameter Pointed to by "Word 0 Param" (low byte)
	1	Value of parameter Pointed to by "Word 0 Param" (high byte)
1	2	Value of parameter Pointed to by "Word 1 Param" (low byte)
	3	Value of parameter Pointed to by "Word 1 Param" (high byte)
2	4	Value of parameter Pointed to by "Word 2 Param" (low byte)
	5	Value of parameter Pointed to by "Word 2 Param" (high byte)
3	6	Value of parameter Pointed to by "Word 3 Param" (low byte)
	7	Value of parameter Pointed to by "Word 3 Param" (high byte)

Instance 105 (used by 4-in/2-out devices only)								
Byte	Bit 7	Bit 6	Bit 5	Bit 4	Bit 3	Bit 2	Bit 1	Bit 0
0	InStat		OutStat2	Outstat1	Input 4	Input 3	Input 2	Input1

Instance 180 (Hardware inputs — used for any LEO device with up to 16 hardware inputs)								
Byte	Bit 7	Bit 6	Bit 5	Bit 4	Bit 3	Bit 2	Bit 1	Bit 0
0	Input 8	Input 7	Input 6	Input 5	Input 4	Input 3	Input 2	Input1
1	Input 16	Input 15	Input 14	Input 13	Input 12	Input 11	Input 10	Input 9

Instance 180 (Hardware ouput states — used for any LEO device with up to 16 hardware outputs)								
Byte	Bit 7	Bit 6	Bit 5	Bit 4	Bit 3	Bit 2	Bit 1	Bit 0
0	Out State 8	Out State 7	Out State 6	Out State 5	Out State 4	Out State 3	Out State 2	Out State 1
1	Out State 16	Out State 15	Out State 14	Out State 13	Out State 12	Out State 11	Out State 10	Out State 9

Instance 181 (Hardware Output States. Used for any LEO Dee outputs)								
Byte	Bit 7	Bit 6	Bit 5	Bit 4	Bit 3	Bit 2	Bit 1	Bit 0
0	Out State 8	Out State 7	Out State 6	Out State 5	Out State 4	Out State 3	Out State 2	Out State 1
1	Out State 16	Out State 15	Out State 14	Out State 13	Out State 12	Out State 11	Out State 10	Out State 9

Instance 182 (IO Fault Status. DSA dependent)								
Byte	Bit 7	Bit 6	Bit 5	Bit 4	Bit 3	Bit 2	Bit 1	Bit 0
0						OutB Flt Stat	OutA Flt Stat	In Flt Stat
1								

Instance 184 (Network Outputs. Used for any LEO Device to report up to 16 network outputs)								
Byte	Bit 7	Bit 6	Bit 5	Bit 4	Bit 3	Bit 2	Bit 1	Bit 0
0	Net Out 8	Net Out 7	Net Out 6	Net Out 5	Net Out 4	Net Out 3	Net Out 2	Net Out 1
1	Net Out 16	Net Out 15	Net Out 14	Net Out 13	Net Out 12	Net Out 11	Net Out 10	Net Out 9

Instance 185 (Module Status. Used for any LEO Device)								
Byte	Bit 7	Bit 6	Bit 5	Bit 4	Bit 3	Bit 2	Bit 1	Bit 0
0	COS Idle	Poll Idle	COS Flt	Poll Flt	Exp Flt	COS Cnxn	Poll Cnxn	Exp Cnxn
1	Reserved	Reserved	Reserved	Reserved	Reserved	Reserved	Minor Flt	Network Flt

Instance 186 (Function Block Outputs 1…16. Used for any LEO Device)								
Byte	Bit 7	Bit 6	Bit 5	Bit 4	Bit 3	Bit 2	Bit 1	Bit 0
0	FB 8	FB 7	FB 6	FB 5	FB 4	FB 3	FB 2	FB 1
1	FB 16	FB 15	FB 14	FB 13	FB 12	FB 11	FB 10	FB 9

Instance 187 (Function Block Outputs 17…32. Used for any LEO Device)								
Byte	Bit 7	Bit 6	Bit 5	Bit 4	Bit 3	Bit 2	Bit 1	Bit 0
0	FB 24	FB 23	FB 22	FB 21	FB 20	FB 19	FB 18	FB 17
1	FB 32	FB 31	FB 30	FB 29	FB 28	FB 27	FB 26	FB 25

Instance 188 (Function Block Outputs 33…48. Used for any LEO Device)								
Byte	Bit 7	Bit 6	Bit 5	Bit 4	Bit 3	Bit 2	Bit 1	Bit 0
0	FB 40	FB 39	FB 38	FB 37	FB 36	FB 35	FB 34	FB 33
1	FB 48	FB 47	FB 46	FB 45	FB 44	FB 43	FB 42	FB 41

Configuration Assembly Instances

Configurations Assemblies provide a convenient method for configuring a DSA via a single Explicit message.

Instance 176 (Config Assembly)		
Byte	**Parameter**	**Mapping (class-instance-attribute)**
0	Autobaud Enable	0xB4-01-15
1 2	Off-to-On Delay	0x1D-01-6
3 4	On-to-Off Delay	0x1D-01-7
5	Output Assembly	0xB4-1-16
6	Input Assembly	0xB4-1-17
7	In Assy Word 0	0xB4-1-7
8	In Assy Word 1	0xB4-1-8
9	In Assy Word 2	0xB4-1-9
10	In Assy Word 3	0xB4-1-10
11 12	Input COS Mask	0xB4-1-13
13 14	Module COS Mask	0xB4-1-40
15 16	FB 1…16 COS Msk	0xB4-1-41
17 18	FB 17…32 COS Msk	0xB4-1-42
19 20	FB 33…48 COS Msk	0xB4-1-43
21	Set To Defaults	0xB4-13
22	Network Override	0x1E-1-105
23	Comms Override	0x1E-1-104
24	OutA Fault State	0x09-1-5
25	OutA Fault Value	0x09-1-6
26	OutA Idle State	0x09-1-7
27	OutA Idle Value	0x09-1-8
28	OutB Fault State	0x09-2-5
29	OutB Fault Value	0x09-2-6
30	OutB Idle State	0x09-2-7
31	OutB Idle Value	0x09-2-8

Connection Object – Class Code 0x0005

The Connection Object manages the resources associated with both I/O and Explicit Message Connections. Each individual connection object instance represents one of the end

points of a DeviceNet connection. Three instances of the Connection Object are supported. Instance 1 is the explicit message connection, instance 2 is the polled I/O connection, and instance 4 is the Change of State/Cyclic I/O connection.

Class Attributes — None

Instance 1 Attributes (Predefined Slave Explicit Connection)

Attribute ID	Access Rule	Name	Data Type	Value
1	Get	State	USINT	0=nonexistant 1=configuring 3=established 4=timed out
2	Get	Instance Type	USINT	0=Explicit Message
3	Get	Transport Class Trigger	USINT	0x83 - Server, Transport Class 3
4	Get	Produced Connection ID	UINT	10xxxxxx011 xxxxxx=node address
5	Get	Consumed Connection ID	UINT	10xxxxxx100 xxxxxx=node address
6	Get	Initial Comm Characteristics	USINT	0x22
7	Get	Produced Connection Size	UINT	0x61
8	Get	Consumed Connection Size	UINT	0x61
9	Get/Set	Expected Packet Rate	UINT	in milliseconds
12	Get	Watchdog Action	USINT	01 = auto delete 03 = deferred delete
13	Get	Produced Connection Path Length	UINT	0
14	Get	Produced Connection Path	—	Empty
15	Get	Consumed Connection Path Length	UINT	0
16	Get	Consumed Connection Path	—	Empty

Instance 2 Attributes (Predefined Slave Polled I/O Connection)

Attribute ID	Access Rule	Name	Data Type	Value
1	Get	State	USINT	0=nonexistant 1=configuring 3=established 4=timed out
2	Get	Instance Type	USINT	1= I/O Connection
3	Get	Transport Class Trigger	USINT	0x82 - Server, Transport Class 2 (If alloc_choice != polled and ack suppression is enabled then value = 0x80)
4	Get	Produced Connection ID	UINT	01111xxxxxx xxxxxx=node address
5	Get	Consumed Connection ID	UINT	10xxxxxx101 xxxxxx=node address
6	Get	Initial Comm Characteristics	USINT	0x21
7	Get	Produced Connection Size	UINT	0 to 8
8	Get	Consumed Connection Size	UINT	0 to 8
9	Get/Set	Expected Packet Rate	UINT	in milliseconds
12	Get/Set	Watchdog Action	USINT	0=transition to timed out 1=auto delete 2=auto reset
13	Get	Produced Connection Path Length	UINT	6
14	Get/Set	Produced Connection Path	—	20 04 24 (assy inst #) 30 03
15	Get	Consumed Connection Path Length	UINT	6
16	Get/Set	Consumed Connection Path	—	20 04 24 (assy inst #) 30 03

Instance 4 Attributes (Predefined Slave Change of State/Cyclic I/O Connection)

Attribute ID	Access Rule	Name	Data Type	Value
1	Get	State	USINT	0=nonexistant 1=configuring 3=established 4=timed out
2	Get	Instance Type	USINT	1=I/O Connection
3	Get	Transport Class Trigger	USINT	0x00 (Cyclic, unacknowledged) 0x03 (Cyclic, acknowledged) 0x10 (COS, unacknowledged) 0x13 (COS, acknowledged)
4	Get	Produced Connection ID	UINT	01101xxxxxx xxxxxx=node address
5	Get	Consumed Connection ID	UINT	10xxxxxx101 xxxxxx=node address
6	Get	Initial Comm Characteristics	USINT	0x01 (acknowledged) 0x0F (unacknowledged)
7	Get	Produced Connection Size	UINT	0 to 8
8	Get	Consumed Connection Size	UINT	0 to 8
9	Get/Set	Expected Packet Rate	UINT	in milliseconds
12	Get	Watchdog Action	USINT	0=transition to timed out 1=auto delete 2=auto reset
13	Get	Produced Connection Path Length	UINT	6
14	Get	Produced Connection Path	—	20 04 24 (assy inst #) 30 03
15	Get	Consumed Connection Path Length	UINT	4 (acknowledged) 0 (unacknowledged)
16	Get/Set	Consumed Connection Path	—	20 04 24 (assy inst #) 30 03
17	Get/Set	Production Inhibit Time	UINT	In milliseconds

Services

ServiceCode	Implemented for		Service Name
	Class	Instance	
0x05	No	Yes	Reset (Connection Object Only)
0x0E	No	Yes	Get_Attribute_Single
0x10	No	Yes	Set_Attribute_Single

Discrete Input Point Object – Class Code 0x0008

Class Attributes:

Attribute ID	Access Rule	Name	Data Type	Value
1	Get	Revision	UINT	3

Instance Attributes:

Attribute ID	Access Rule	Name	Data Type	Value
3	Get	Value	BOOL	0=OFF, 1=ON
115	Get/Set	Force Enable	BOOL	0=Disable, 1=Enable (For use with DeviceLogix only)
116	Get/Set	Force Value	BOOL	0=OFF, 1=ON (For use with DeviceLogix only)

Services:

ServiceCode	Implemented for		Service Name
	Class	Instance	
0x0E	Yes	Yes	Get_Attribute_Single
0x10	No	Yes	Set_Attribute_Single

Discrete Output Point Object – Class Code 0x0009

Class Attributes — None

Instance Attributes:

Attribute ID	Access Rule	Name	Data Type	Value
3	Get	Value	BOOL	0=OFF, 1=ON
4	Get	Status	BOOL	0=OK, 1=Faulted
5	Get/Set	Fault Action	BOOL	0=Fault Value attribute, 1=Hold Last State
6	Get/Set	Fault Value	BOOL	0=OFF, 1=ON
7	Get/Set	Idle Action	BOOL	0=Fault Value attribute, 1=Hold Last State
8	Get/Set	Idle Value	BOOL	0=OFF, 1=ON
115	Get/Set	Force Enable	BOOL	0=Disable, 1=Enable (For use with DeviceLogix only)
116	Get/Set	Force Value	BOOL	0=OFF, 1=ON (For use with DeviceLogix only)
117	Get/Set	Input Binding	—	(For use with DeviceLogix only)

Services:

ServiceCode	Implemented for		Service Name
	Class	Instance	
0x0E	Yes	Yes	Get_Attribute_Single
0x10	No	Yes	Set_Attribute_Single

Discrete Input Group Object – 0x001D

Class Attributes — None

Instance Attributes:

Attribute ID	Access Rule	Name	Data Type	Value
3	Get	Number of Instances	USINT	2 or 4
4	Get	Instance List	Array of UINT	—
5	Get	Status	BOOL	0=OK; 1=Input fault
6	Get/Set	Off_On_Delay	UINT	In microseconds
7	Get/Set	On_Off_Delay	UINT	In microseconds

Services:

ServiceCode	Implemented for		Service Name
	Class	Instance	
0x0E	No	Yes	Get_Attribute_Single
0x10	No	Yes	Set_Attribute_Single

Discrete Output Group Object – 0x001E

Class Attributes — None

Instance Attributes:

Attribute ID	Access Rule	Name	Data Type	Value
3	Get	Number of Instances	USINT	2 or 4
4	Get	Instance List	Array of UINT	—
5	Get	Status	BOOL	0=OK; 1=Input fault
6	Get/Set	Command	BOOL	0=idle; 1=run
104	Get/Set	Network Status Override	BOOL	0=No Override (go to safe state) 1=Override (run local logic)
105	Get/Set	Comm Status Override	BOOL	0=No override (go to safe state) 1=Override (run local logic)

Services:

ServiceCode	Implemented for		Service Name
	Class	Instance	
0x0E	No	Yes	Get_Attribute_Single
0x10	No	Yes	Set_Attribute_Single

Acknowledge Handler Object – 0x002B

Class Attributes — None

Instance Attributes:

Attribute ID	Access Rule	Name	Data Type	Value
1	Get/Set	Acknowledge Timer	UINT	milliseconds
2	Get	Retry Limit	USINT	1
3	Get	COS Producing Connection Instance	UINT	4

Services:

ServiceCode	Implemented for		Service Name
	Class	Instance	
0x0E	Yes	Yes	Get_Attribute_Single
0x10	No	Yes	Set_Attribute_Single

PCP Object – Class Code 0x00C2

Class Attributes — None

Instance Attributes:

Attribute ID	Access Rule	Name	Data Type	Value
1	Get/Set	MCC Number	USINT	0 to 255
2	Get/Set	Vertical Section Number	USINT	0 to 255
3	Get/Set	Starting Section Letter	USINT	0 to 255
4	Get/Set	Space Factors	USINT	0 to 0x3F
5	Get/Set	Cabinet Width	USINT	0 to 255
6	Get/Set	Controlled Device	USINT	0 to 255
7	Get	Number of Device Inputs	USINT	4
8	Get/Set	Devices Connected at Inputs	Array of USINT	—
9	Get	Number of Device Outputs	USINT	2
10	Get/Set	Devices Connected at Outputs	Array of USINT	—

Services:

ServiceCode	Implemented for		Service Name
	Class	Instance	
0x0E	Yes	Yes	Get_Attribute_Single
0x10	No	Yes	Set_Attribute_Single
0x18	No	Yes	Get_Member
0x19	No	Yes	Set_Member

Reach us now at www.rockwellautomation.com

Wherever you need us, Rockwell Automation brings together leading brands in industrial automation including Allen-Bradley controls, Reliance Electric power transmission products, Dodge mechanical power transmission components, and Rockwell Software. Rockwell Automation's unique, flexible approach to helping customers achieve a competitive advantage is supported by thousands of authorized partners, distributors and system integrators around the world.

Americas Headquarters, 1201 South Second Street, Milwaukee, WI 53204, USA, Tel: (1) 414 382-2000, Fax: (1) 414 382-4444
European Headquarters SA/NV, avenue Herrmann Debroux, 46, 1160 Brussels, Belgium, Tel: (32) 2 663 06 00, Fax: (32) 2 663 06 40
Asia Pacific Headquarters, 27/F Citicorp Centre, 18 Whitfield Road, Causeway Bay, Hong Kong, Tel: (852) 2887 4788, Fax: (852) 2508 1846

Publication 100-UM005A-EN-P - April 2001
Supersedes Publication 0100-5.3 - January 2000
© 2001 Rockwell International Corporation. Printed in the U.S.A.