Technical Data

Original Instructions

Limit Switches Specifications

Bulletin Numbers 801, 802DN, 802G, 802K, 802M, 802MC, 802T, 802X, 802XR, 802B, and 440P

Topic	Page
Summary of Changes	2
Additional Resources	2
Limit Switch Overview	3
Bulletin 801 General-purpose Limit Switches	5
Bulletin 802G Gravity Return Limit Switches	9
Bulletin 802M/MC Prewired Factory Sealed Switches	11
Bulletin 802R Sealed Contact Limit Switches	29
Bulletin 802T Oiltight Limit Switches	35
Bulletin 802T Safety Limit Switches	67
Bulletin 802X Watertight or Hazardous Location Limit Switches	71
Bulletin 802XR Sealed Contact Hazardous Location Limit Switches	79
Bulletin 802B Compact, Precision, and Small Precision Small Metal Body Limit Switches	85
Bulletin 440P Safety Limit Switches	107
Bulletin 802K Metal General Purpose Limit Switches	125
Operating Levers	129

Summary of Changes

This publication contains the following new or updated information. This list includes substantive updates only and is not intended to reflect all changes.

Topic	Page
Added Product Selection information to all products.	Throughout
Added Limit Switch Overview section.	3
Added Operating Levers section.	129

Additional Resources

These documents contain additional information concerning related products from Rockwell Automation.

Resource	Description
Cordsets & Field Attachables Technical Data, publication 889-TD002	Provides an overview of cordsets and field attachables that Rockwell Automation provides.
System Security Design Guidelines Reference Manual, SECURE-RM001	Provides guidance on how to conduct security assessments, implement Rockwell Automation products in a secure system, harden the control system, manage user access, and dispose of equipment.
UL Standards Listing for Industrial Control Products, publication CMPNTS-SR002	Assists original equipment manufacturers (OEMs) with construction of panels, to help ensure that they conform to the requirements of Underwriters Laboratories.
American Standards, Configurations, and Ratings: Introduction to Motor Circuit Design, publication IC-AT001	Provides an overview of American motor circuit design based on methods that are outlined in the NEC.
Industrial Components Preventive Maintenance, Enclosures, and Contact Ratings Specifications, publication IC-TD002	Provides a quick reference tool for Allen-Bradley industrial automation controls and assemblies.
Safety Guidelines for the Application, Installation, and Maintenance of Solid-state Control, publication SGI-1.1	Designed to harmonize with NEMA Standards Publication No. ICS 1.1-1987 and provides general guidelines for the application, installation, and maintenance of solid-state control in the form of individual devices or packaged assemblies incorporating solid-state components.
Industrial Automation Wiring and Grounding Guidelines, publication 1770-4.1	Provides general guidelines for installing a Rockwell Automation industrial system.
Product Certifications website, rok.auto/certifications.	Provides declarations of conformity, certificates, and other certification details.

You can view or download publications at rok.auto/literature.

Technical Definitions and Terminology

Term	Definition
Actuator	A switch mechanism that when moved as intended, operates the switch contacts. This mechanism transmits the applied force from the actuating device to the contact block, which causes the contacts to operate.
Actuator free position	The initial position of the actuator when there is no external force (except gravity) applied to the actuator.
Actuator operating position	The position of the actuator when the contacts operate.
Actuator resetting position	The position of the actuator at which the contacts move from the operated position to the "normal" position.
Differential travel (travel to reset contacts)	The angle or distance through which the actuator moves from the contact operating position to the actuator resetting position, or the distance between the operating point and the release point.
Normal contact position	The position of the contacts when no operating force is applied.
Operating contact position	The position to which the contacts move when the actuator is deflected to or beyond the actuator operating position.
Operating force	The straight-line force in the designed direction applied to the switch actuator to cause the contacts to move to the operated position.
Operating torque	The torque that must be applied to the actuator to cause the movable contacts to move to the operated contact position.
Overtravel	The movement of the actuator beyond the contact operating position.
Pretravel (travel to the operate contacts)	Travel to operate the contacts from the actuator free position.
Slow make-slow break	A type of contact structure with no overcenter mechanism. Contacts move at a speed directly proportional to the speed of operation of the actuator. Contacts may touch with little contact pressure.
Snap action	In this type of contact structure, movement of the actuator applies force to an overcenter mechanism, which creates a fast change in contact state once the overcenter position has been exceeded.
Snap action/IEC positive opening action	This contact structure is similar to the snap action contact with one addition: continued operation of the operating mechanism beyond the normal snap action position applies force directly to the normally closed (N.C.) contact if it has not opened with the snap action mechanism. This helps to verify the opening of even a welded contact. For example, if a contact has a snap action operating point at 40° rotary movement, the direct opening action point may be at 60° or more. No direct opening action forces are applied to the N.O. contact.
Total or maximum travel	The sum of the pretravel and the overtravel.

Actuator Consideration

Limit switches are designed for proper performance with the actuators with which they are supplied. Supplementary actuators should not be used unless the limit switches are designed for them.

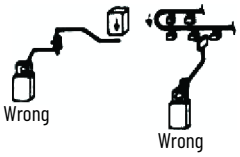

Operating mechanism for limit switches should be so designed that under any operating or emergency conditions the limit switch is not operated beyond its overtravel limit position. A limit switch should not be used as a mechanical stop.

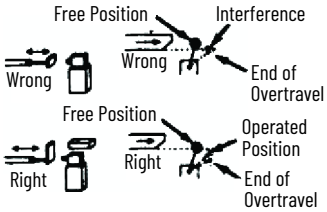

For limit switches with lever actuators, the actuating force should be applied as nearly perpendicular to the lever as practical and perpendicular to the shaft axis about which the lever rotates.

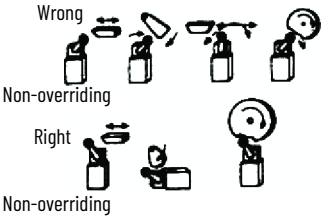

Where relatively fast motions are involved cam arrangements should be such that the actuator does not receive a severe impact. Cams should be designed such that the limit switch is held operated long enough to operate relays, valves, and so on.

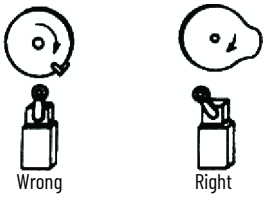

Cam or dog arrangements should be such that the actuator is not suddenly released to snap back freely.

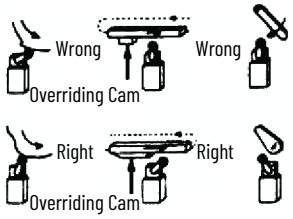

A limit switch actuator must be allowed to move far enough for positive operation of the contacts.

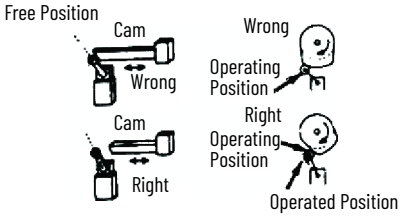

For limit switches with push rod actuators, the actuating force should be applied as nearly as possible in line with the push rod axis.

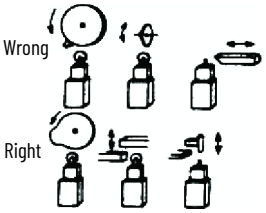

Location and Installation

Limit switches should be mounted rigidly and in readily accessible locations with suitable clearances to permit easy service and replacement when necessary. Cover plates should face the maintenance access point.

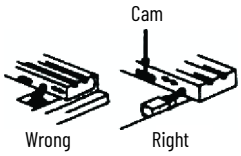

Limit switches should not be used in locations where temperature or atmosphere conditions are beyond specifications.

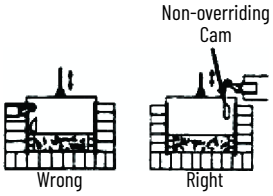

Limit switches should be placed in locations where machining chips do not accumulate under normal operating conditions.

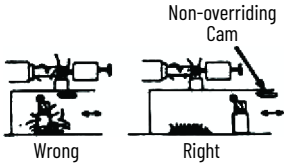

Limit switches should not be submerged in or splashed with oils, coolants, or other liquids.

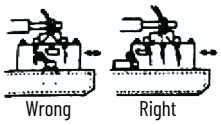

The location of oiltight limit switches and the method of connecting them should be such that condensation in the conduit cannot enter the switch enclosure.

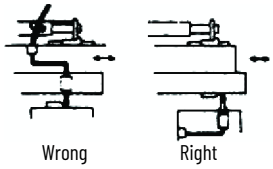

Limit switches should be mounted in locations that prevent false operation by normal movements of operator or machine components.

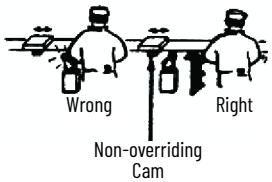

Bulletin 801 General-purpose Limit Switches

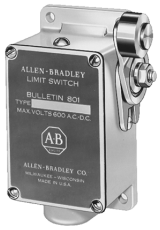
801-ASA11

801-ASC17

801-CMC21

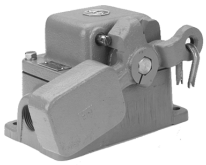
801-FSC148

801-ASC1411

Specifications

Attribute	Value
Ambient temperature	0...40 °C (32...104 °F) (1)

(1) Based on the absence of freezing moisture or water.

Contact Arrangements and Ratings

AC
- 3 A, 120V
- 1.5 A, 240V
- 0.75 A, 480V
- 0.6 A, 600V

DC
- 1.1 A, 115V
- 0.55 A, 230V
- 0.2 A, 550V

Light Duty

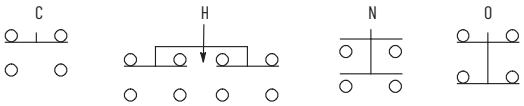

D

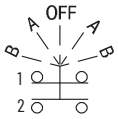

Lever Position	Contact Position	
	1	2
Off	C	O
A	O	O
B	O	C

F

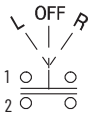

Lever Position	Contact Position	
	1	2
R	C	O
Off	O	O
L	O	C

G

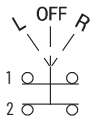

Lever Position	Contact Position	
	1	2
R	C	O
Off	O	O
L	O	C

K

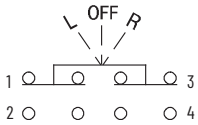

Lever Position	Contact Position			
	1	2	3	4
R	C	O	O	C
Off	C	O	C	O
L	O	C	C	O

AC
- 6A, 120V
- 3A, 240V
- 1.5A, 480V
- 1.2A, 600V

DC
- 2.2A, 115V
- 1.1A, 230V
- 0.4A, 550V

Standard Duty

Product Selection

Table 1 - NEMA Type 1 Enclosure

Operator Type	Contact Operation	Housing Style (1)	Contact Type and Rating (2)	Torque/Force to Operate, Max	Travel to Operate Contacts, Max	Over Travel (Min)	Cat. No.
Roller	Slow action spring return	Figure 1	A	15.58 N (3.5 lb)	8°	3°	801-ASA11
			B		3°	8°	801-ASB11
		Figure 18	A	15.58 N (3.5 lb)	8°	3°	801-ASA12
		Figure 2	C	10.0 N (2.25 lb)	30°	25°	801-ASC17
			D		See Figure 20 on page 8	See Figure 20 on page 8	801-ASD17
			F		25°	30°	801-ASF17
			G		15°	40°	801-ASG17
	Snap action spring return	Figure 2	C	22.25 N (5.0 lb)	25°	30°	801-ASC21
				37.82 N (8.5 lb)	9°	40°	801-ASC21X
			N	22.25 N (5.0 lb)	25°	30°	801-ASN21
				37.82 N (8.5 lb)	9°	40°	801-ASN21X
			O	22.25 N (5.0 lb)	25°	30°	801-ASO21
				37.82 N (8.5 lb)	9°	40°	801-ASO21X
			C	10.0 N (2.25 lb)	30°	25°	801-ASC313
		Figure 4	H	22.25 N (5.0 lb)	30°	20°	801-ASH22
				31.15 N (7.0 lb)	10°	43°	801-ASH26X
		Figure 3	C	17.8 N (4.0 lb)	25°	30°	801-ASC25
				31.15 N (7.0 lb)	9°	44°	801-ASC25X
			N	17.8 N (4.0 lb)	25°	30°	801-ASN25
				28.92 N (6.5 lb)	9°	44°	801-ASN25X
		Figure 5	C	22.25 N (5.0 lb)	25°	15°	801-ASC27
		Figure 6		17.8 N (4.0 lb)			801-ASC29
	Ratchet type maintained	Figure 7	C	28.92 N (6.5 lb)	68°	12°	801-ASC218
		Figure 8		22.25 N (5.0 lb)			801-ASC220
	Snap action maintained	Figure 19	C	10.0 N (2.25 lb)	38°	24°	801-AMC211
Fork	Snap action maintained	Figure 9	C	15.58 N (3.5 lb)	20.6 mm (0.81 in.)	–	801-CMC21
Rod or chain				10.0 N (2.25 lb)	20.6 mm (0.81 in.)	20.6 mm (0.81 in.)	801-DMC21
Stroke				20.0 N (4.5 lb)	14.2 mm (0.56 in.)	–	801-EMC21

(1) See Approximate Dimensions on page 8.
(2) See Contact Arrangements and Ratings on page 5.

Table 2 - NEMA Type 4 Enclosure (For Indoor Use)

Operator Type	Contact Operation	Housing Style (1)	Contact Type and Rating (2)	Torque/Force to Operate, Max	Travel to Operate Contacts, Max	Over Travel (Min)	Cat. No.
Roller	Slow action spring return	Figure 10	C	27.81 N (6.25 lb)	26°	4°	801-ASC1411
			H				801-ASH1411
		Figure 11	C	17.8 N (4.0 lb)			801-ASC1415
		Figure 12	K				801-ASK1421
	Snap action spring return	Figure 13	C		26.5°	6°	801-ASC2426
Fork	Slow action maintained	Figure 14	C	31.15 N (7.0 lb)	31.8 mm (1.25 in.)	—	801-CMC144
	Snap action maintained	Figure 15		28.92 N (6.5 lb)	38.1 mm (1.5 in.)	—	801-CMC2411
Rod or chain	Slow action spring return	Figure 16	K	13.35 N (3.0 lb)	26°	4°	801-DSK145
Weight		Figure 17	C	22.25 N (5.0 lb)	26°	4°	801-FSC148 (3)

(1) See Approximate Dimensions on page 8.
(2) See Contact Arrangements and Ratings on page 5.
(3) The following replacement parts are available: combination lever/weight (B7391), counterweight (Z1997), and counterweight cable (B37939).

Table 3 - NEMA Type 7&9 Enclosure

Operator Type	Contact Operation	Housing Style (1)	Contact Type and Rating (2)	Torque/Force to Operate, Max	Travel to Operate Contacts, Max	Over Travel (Min)	Cat. No.
Roller	Slow action spring return	Figure 10	C	27.81 N (6.25 lb)	26°	4°	801-ASC1711
			H				801-ASH1711
		Figure 11	C	17.8 N (4.0 lb)			801-ASC1715
		Figure 12	K				801-ASK1721
	Snap action spring return	Figure 13	C		26.5°	6°	801-ASC2726
Fork	Snap action maintained	Figure 15	C	28.92 N (6.5 lb)	38.1 mm (1.5 in.)	—	801-CMC2711

(1) See Approximate Dimensions on page 8.
(2) See Contact Arrangements and Ratings on page 5.

Approximate Dimensions

Dimensions are shown in mm (in.). Dimensions are not intended to be used for installation purposes.

IMPORTANT For operating head and lever assembly dimensions that are not shown, see Approximate Dimensions on page 132. Conduit pipe opening 1/2 in. NPT.

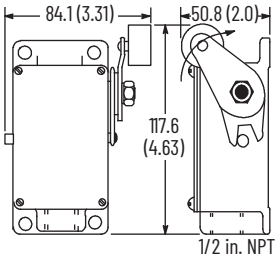

Figure 1 and 18

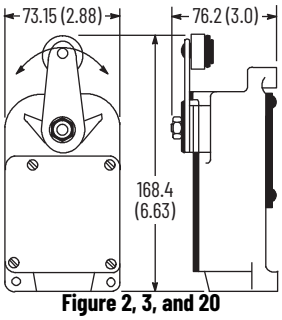

Figure 2, 3, and 20

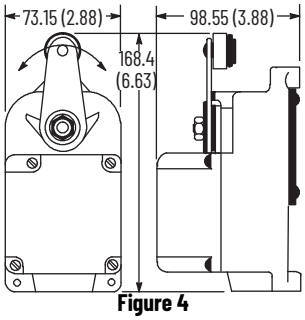

Figure 4

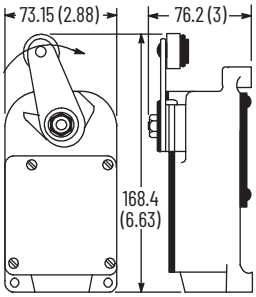

Figure 5, 6, and 19

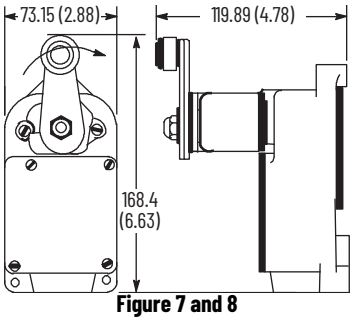

Figure 7 and 8

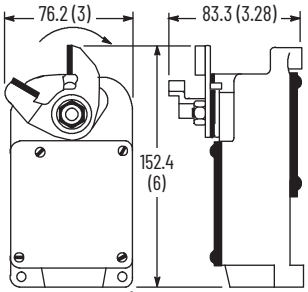

Figure 9

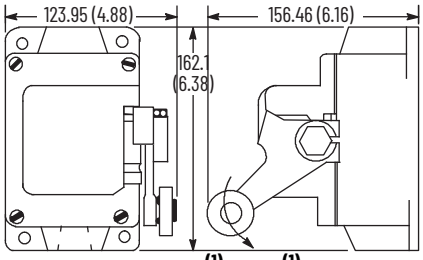

Figure 10 (1) and 11 (1)

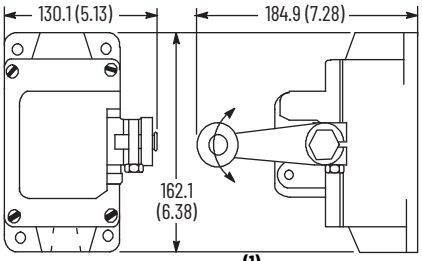

Figure 12 (1)

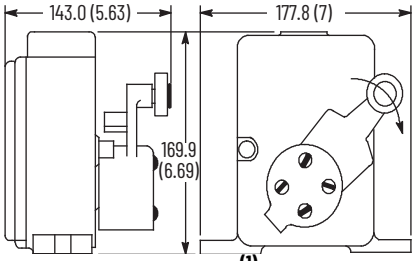

Figure 13 (1)

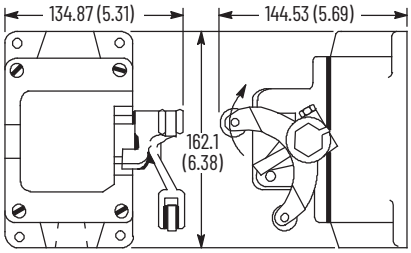

Figure 14 (1)

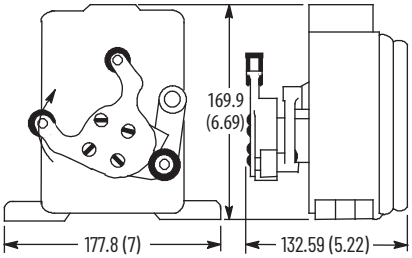

Figure 15

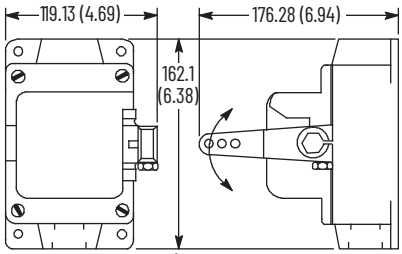

Figure 16

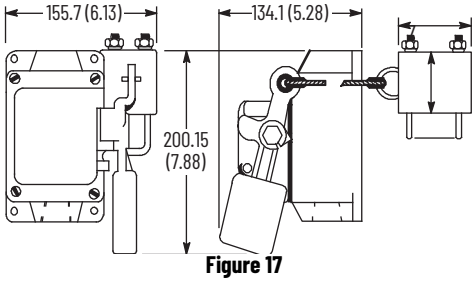

Figure 17

(1) For NEMA 7 & 9 housing, reduce total height by 1.6 mm (0.063 in.).

Bulletin 802G Gravity Return Limit Switches

802G gravity return limit switches have the following features:

- Light operating torque
- Unique lever arms
- Trip point adjustable to any angle

ATTENTION: Bulletin 802T or 802MC levers cannot be used on the gravity return limit switch. The gravity return limit switch requires the levers in Table 6 on page 10.

802G-GP with Steel Operating Lever

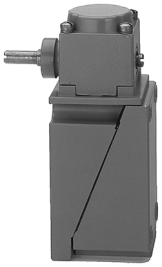

Slotted Shaft to Aid Adjustment

Specifications

Attribute	Value
Certifications	UL Listed, CSA Certified, and CE Marked for applicable directives
Enclosure rating	NEMA 1
Ambient temperature	0...110 °C (32...230 °F)

Table 4 - AC Contact Rating (Max per Pole, 50 or 60 Hz, Same Polarity)

NEMA Rating Designation	AC Voltage, Max	A		Continuous Carrying Current	VA	
		Make	Break		Make	Break
B600	120	30	3.00	5 A	3600	360
	240	15	1.50			
	480	15	0.75			
	600	6	0.60			

Table 5 - DC Contact Rating (Max per Pole, Same Polarity)

Voltage Range	Current Rating
115...125	0.4 A
230...250	0.2 A
550...600	0.1 A

Product Selection

Contact Operation		Torque/Force to Operate, Max	Travel to Operate Contacts, Max	Max Travel	Travel to Reset Contacts, Max	Cat. No.	
						Complete Switch Without Lever	Switch Without Lever and Base
1 N.O., 1 N.C.	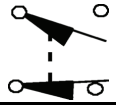	0.018 N•m (2.5 oz•in.) (without lever)	Adjustable from 10...180°	360° CW or CCW	10° (1)	802G-GP	802G-GP1

(1) 10° opposite trip direction, 180° in trip direction.

Table 6 - Operating Levers

Description	Cat. No.
6.35 mm (0.25 in.) steel rod, adjustable to 219.0 mm (8.625 in.) length	802G-W10
3.18 mm (0.125 in.) steel rod, adjustable to 219.0 mm (8.625 in.) length	802G-W10A
6.35 mm (0.25 in.) nylon rod, adjustable to 219.0 mm (8.625 in.) length	802G-W11

Modification for Neon Status Indicator

The Bulletin 802G gravity return limit switch can be supplied with a neon status indicator. To order, add the letter N for 120V AC 50/60 Hz or N5 for 240V AC 50/60 Hz. Example: Cat. No. 802G-GP, becomes Cat. No. 802G-GPN.

You must connect the status indicator internally to two isolated terminals in the base assembly allowing complete flexibility in the connection of the status indicator. Switches with a status indicator have a contact rating of NEMA B300.

Approximate Dimensions

Dimensions are shown in mm (in.). Dimensions are not intended to be used for installation purposes.

IMPORTANT For operating head and lever assembly dimensions that are not shown, see Approximate Dimensions on page 132. Conduit pipe opening 1/2 in. NPT.

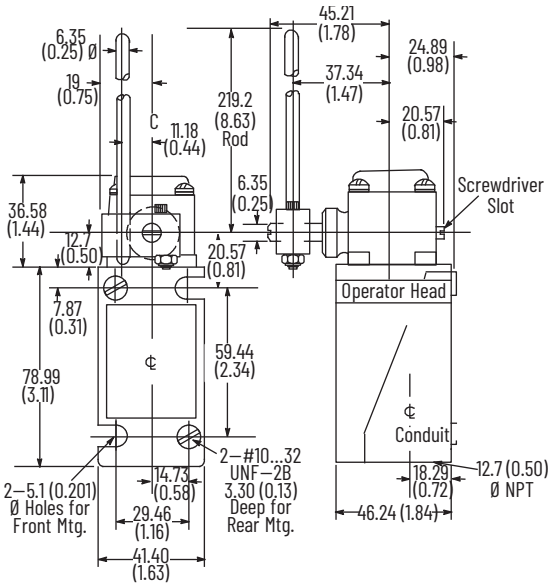

802G-GP with 802G-W10 Lever
Approximate Shipping Wt. 680 g (1.5 lb)

Bulletin 802M Prewired Factory Sealed Switches

802M compact pre-wired limit switches have the following features:

- Pre-wired and factory sealed
- Corrosion-resistant housings
- Corrosion-resistant hardware (802MC)
- Side rotary, adjustable top, and top or side push styles with and without rollers
- Double-break fine silver contacts

Specifications

Attribute	Value
Certifications	UL Listed, CSA Certified, and CE Marked for applicable directives
Enclosure type rating	NEMA 1, 4, 6P, 13, and IP67
Pollution degree	3
Ambient temperature (1)	0...80 °C (32...176 °F)

(1) Minimum temperature is based on the absence of freezing moisture or water.

Table 7 - AC Contact Rating (Max per Pole, 50 or 60 Hz, 2 Circuits Same Polarity)

NEMA Rating Designation	Max Voltage [AC]	A		Continuous Carrying Current [A]	VA	
		Make	Break		Make	Break
A600 AC-15	120	60	6.00	10	7200	720
	240	30	3.00			
	480	15	1.50			
	600	12	1.20			

Table 8 - AC Contact Rating (Max per Pole, 50 or 60 Hz, 4 Circuits Same Polarity)

NEMA Rating Designation	Max Voltage [AC]	A		Continuous Carrying Current [A]	VA	
		Make	Break		Make	Break
B300	120	30	3.00	5	3600	360
	240	15	1.50			

Table 9 - DC Contact Rating (Max per Pole, 2 Circuits Same Polarity)

Nominal Voltage	A	Continuous Carrying Current [A]
24	1.1	5

Lever Type – Spring Return

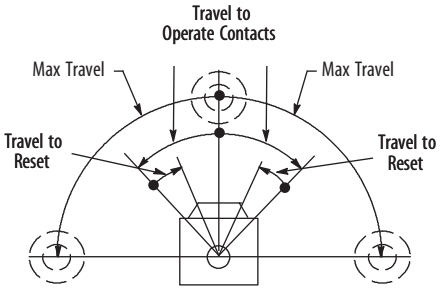

Range of Operation

Complete Switch Without Lever

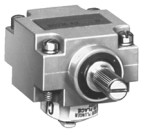
Operator Head Only

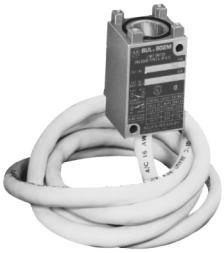
Switch Body Only

Product Selection

Number of Circuits	Lever Movement vs. Contact Operation		Torque/Force to Operate, Max [N•m (lb•in)]	Travel to Operate Contacts, Max	Max Travel	Travel to Reset Contacts, Max	Cat. No.		
							Switch without Lever (1)	Operator Head Only	Switch Body Only (1)
2	Clockwise or Counterclockwise	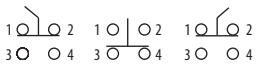	0.34 (3)	15°	86°	6°	802M-AY5	802M-AX	802M-XY5
			0.56 (5)	8°		4°	802M-HY5	802M-HX	
	Clockwise	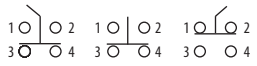	0.34 (3)	15°		6°	802M-A1Y5	802M-A1X	
			0.56 (5)	8°		4°	802M-H1Y5	802M-H1X	
	Counterclockwise	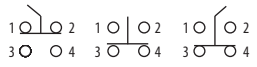	0.34 (3)	15°		6°	802M-A2Y5	802M-A2X	
			0.56 (5)	8°		4°	802M-H2Y5	802M-H2X	
4	Clockwise or Counterclockwise	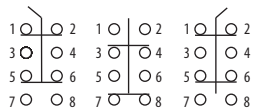	0.34 (3)	15°		6°	802M-ATY5	802M-AX	802M-XTY5
			0.56 (5)	8°		4°	802M-HTY5	802M-HX	
	Clockwise	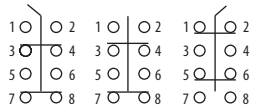	0.34 (3)	15°		6°	802M-A1TY5	802M-A1X	
			0.56 (5)	8°		4°	802M-H1TY5	802M-H1X	
	Counterclockwise	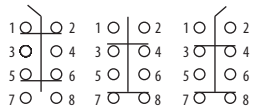	0.34 (3)	15°		6°	802M-A2TY5	802M-A2X	
			0.56 (5)	8°		4°	802M-H2TY5	802M-H2X	

(1) The standard length of STO cable is 1.52 mm (5 ft). For other lengths, see Table 11 on page 21.

Approximate Dimensions

Dimensions are shown in mm (in.). Dimensions are not intended to be used for installation purposes.

IMPORTANT Mounting foot adapter that is shown in Figure 1 and Figure 2 on page 18 is for use with two-circuit 802M type switches only.

For operating head and lever assembly dimensions that are not shown, see Approximate Dimensions on page 132.

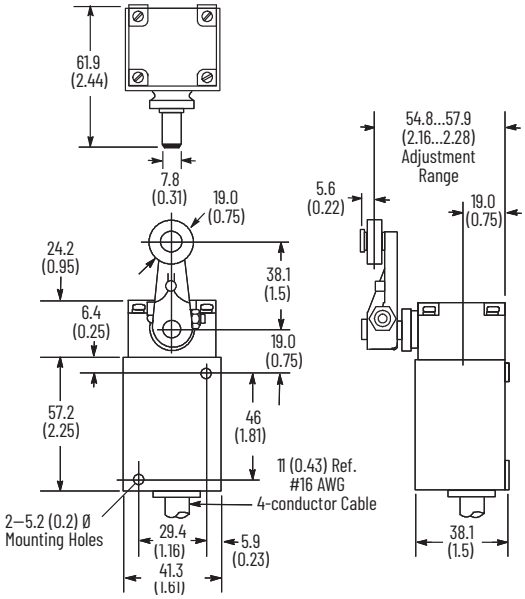

2-circuit with Cat. No. 802M-W1 Lever
Approximate Shipping Wt. 0.53 kg (1 lb 3 oz)

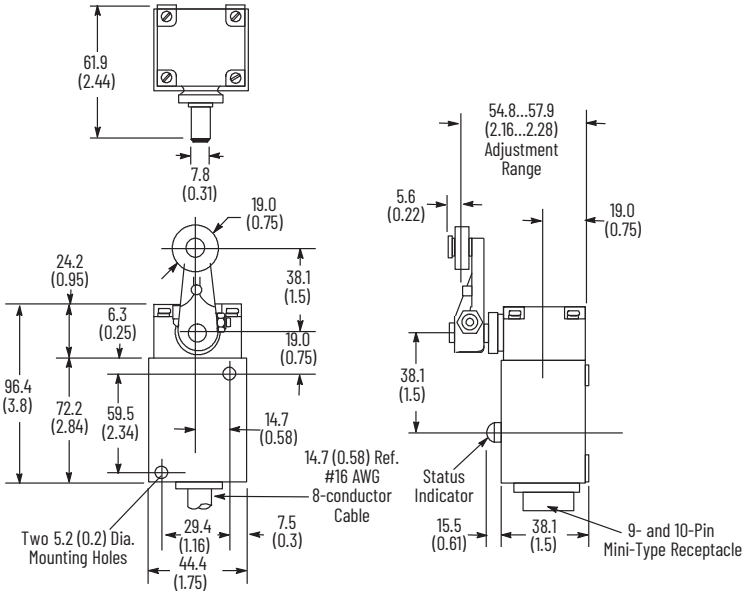

4-circuit with Cat. No. 802M-W1 Lever
Approximate Shipping Wt. 0.9 kg (2 lb)

Lever Type Neutral Position – Spring Return

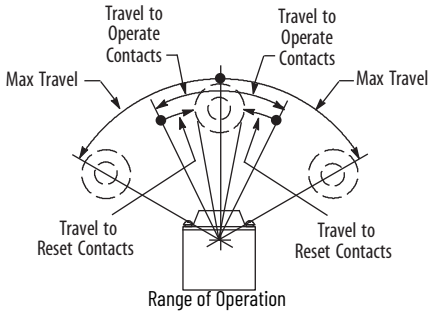

Complete Switch Without Lever

Operator Head Only

Switch Body Only

Product Selection

Number of Circuits	Lever Movement vs. Contact Operation	Torque/Force to Operate, Max [N•m (lb•in)]		Travel to Operate Contacts, Max	Max Travel	Travel to Reset Contacts, Max	Cat. No.		
		CW	CCW				Switch without Lever (1) (2)	Operator Head Only (2)	Switch Body Only (1)
4	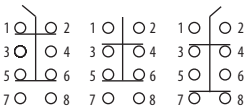	0.79 (7)	0.85 (7.5)	16°	75°	7°	802M-NPY5	802M-NPX	802M-XNPY5

(1) The standard length of STO cable is 1.52 m (5 ft). For other lengths, see Table 11 on page 21.
(2) Operating lever 802T-W3F should not be used with this switch.

Approximate Dimensions

Dimensions are shown in mm (in.). Dimensions are not intended to be used for installation purposes.

IMPORTANT Mounting foot adapter that is shown in Figure 1 and Figure 2 on page 18 is for use with two-circuit 802M type switches only.

For operating head and lever assembly dimensions that are not shown, see Approximate Dimensions on page 132.

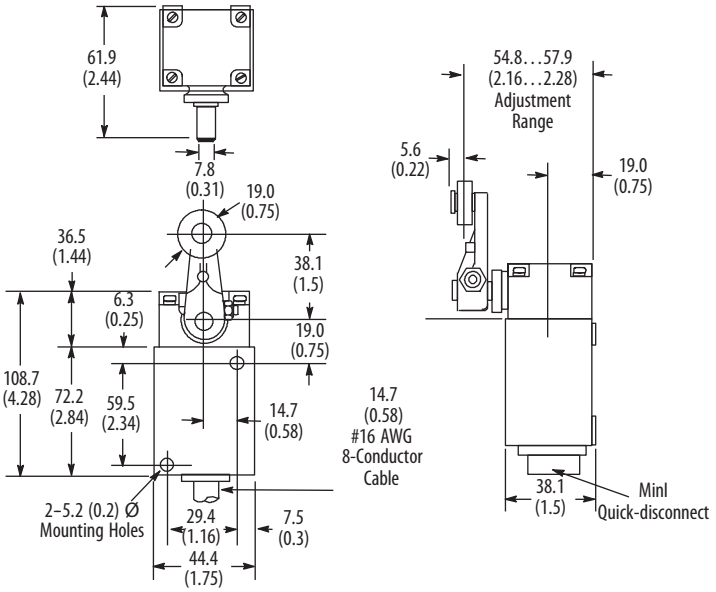

Four-circuit with Cat. No. 802M-W1 Lever [mm (in.)
Approximate Shipping Wt. 0.9 kg (2 lb)

802M Lever Type – Maintained Contact

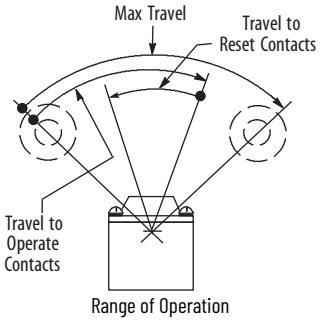

Complete Switch Without Lever

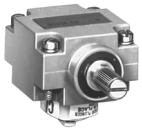
Operator Head Only

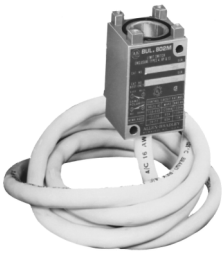
Switch Body Only

Product Selection

Number of Circuits	Lever Movement vs. Contact Operation		Torque/Force to Operate, Max [N•m (lb•in)]	Travel to Operate Contacts, Max (1)	Max Travel (1)	Travel to Reset Contacts, Max	Cat. No.		
							Switch without Lever (2)	Operator Head Only	Switch Body Only (2)
2	Clockwise or Counterclockwise	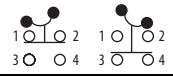	0.31 N•m (2.75 lb•in)	75°	87°	35°	802M-AMY5	802M-AMX	802M-XY5
4		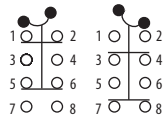					802M-AMTY5		802M-XTY5

(1) Operating lever 802T-W3F should not be used with this switch.
(2) The standard length of STO cable is 1.52 m (5 ft). For other lengths, see Table 11 on page 21.

Approximate Dimensions

Dimensions are shown in mm (in.). Dimensions are not intended to be used for installation purposes.

IMPORTANT Mounting foot adapter that is shown in Figure 1 and Figure 2 on page 18 is for use with two-circuit 802M type switches only.

For operating head and lever assembly dimensions that are not shown, see Approximate Dimensions on page 132.

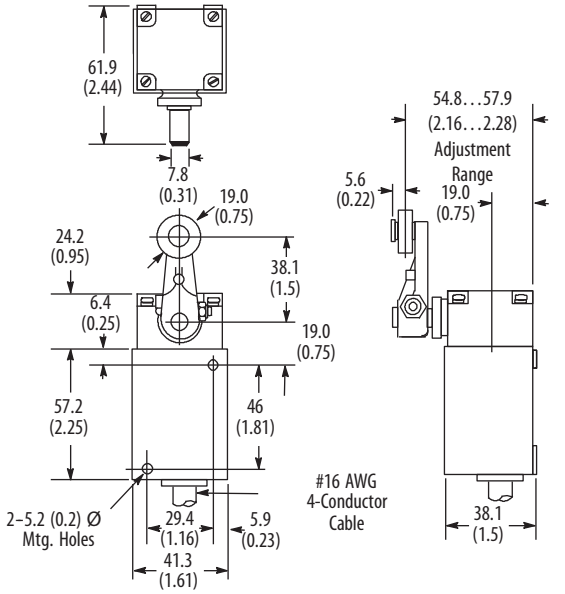

Two-circuit with Cat. No. 802M-W1 Lever
Approximate Shipping Wt. 0.53 kg (1 lb 3 oz)

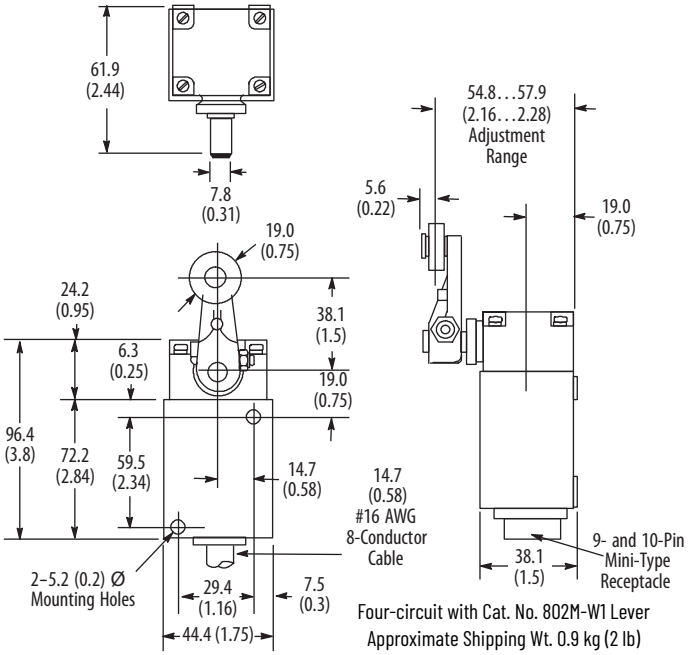

Four-circuit with Cat. No. 802M-W1 Lever
Approximate Shipping Wt. 0.9 kg (2 lb)

Lever Type Sequential – Spring Return

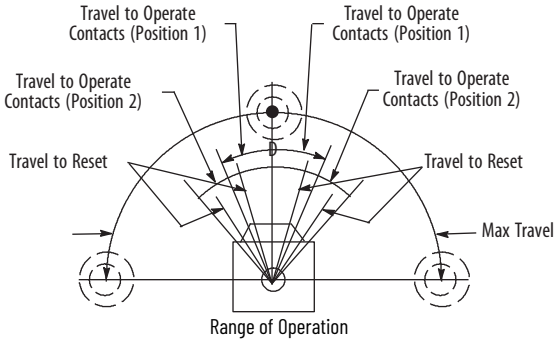

Complete Switch Without Lever

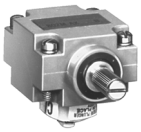
Operator Head Only

Switch Body Only

Product Selection

Table 10 - Four-circuit

Lever Movement vs. Contact Operation	Position 1	Position 2	To Max Travel	Position 1	Position 2	Max Travel	Travel to Reset Contacts, Max	Cat. No.		
								Switch without Lever (1)(2)	Operator Head Only (2)	Switch Body Only (1)
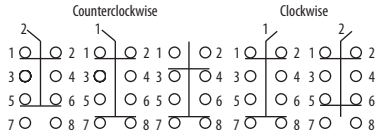	0.79 N•m (7 lb•in)	0.9 N•m (8 lb•in)		10°±3°	20°±3°	88°	4°± 3°	802M-ASY5	802M-ASX	802M-XSY5

(1) The standard length of STO cable is 1.52 m (5 ft). For other lengths, see Table 11 on page 21.
(2) Operating lever 802T-W3F should not be used with this switch.

Approximate Dimensions

Dimensions are shown in mm (in.). Dimensions are not intended to be used for installation purposes.

IMPORTANT Mounting foot adapter that is shown in Figure 1 and Figure 2 on page 18 is for use with two-circuit 802M type switches only.

For operating head and lever assembly dimensions that are not shown, see Approximate Dimensions on page 132.

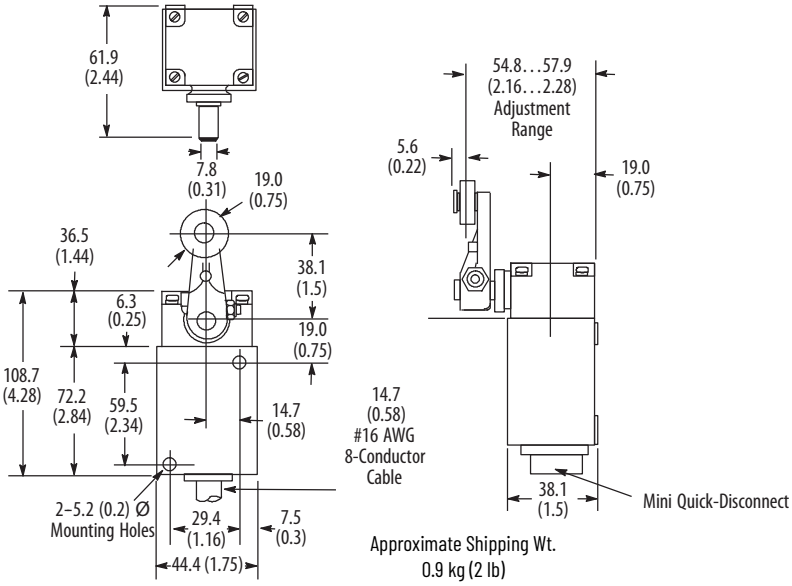

Approximate Shipping Wt.
0.9 kg (2 lb)

Push Type – Spring Return

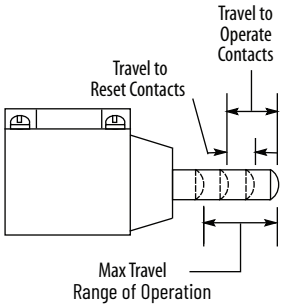

Switch Body Only

Adjustable Top Push Rod Switch and Head

Adjustable Side Push Rod Switch and Head

Top Push Rod head

Side Push Rod Head

Top Push Roller Head

Side Push Vertical Roller Head

Side Push Horizontal Roller Head

Product Selection

Number of Circuits	Operator Type	Contact Operation		Torque/Force to Operate, Max	Travel to Operate Contacts, Max	Max Travel	Travel to Reset Contacts, Max	Cat. No.		
		Normal	Operated					Switch without Lever (1)	Operator Head Only	Switch Body Only (1)
2	Top Push Rod	1 ○ ○ 2 3 ○ ○ 4	1 ○ ○ 2 3 ○ ○ 4	13.3 N (3 lb)	1.45 (0.057)	5.26 (0.207)	0.56 (0.022)	802M-BY5	802M-BX	802M-XY5
	Adjustable Top Push Rod							802M-BAY5	802M-BAX	
	Side Push Rod			20 N (4.5 lb)	2.59 (0.102)	5.16 (0.203)	1.14 (0.045)	802M-CY5	802M-CX	
	Top Push Roller			14.7 N (3.3 lb)	1.45 (0.057)	5.26 (0.207)	0.56 (0.022)	802M-DY5	802M-DX	
	Side Push Vertical Roller			20 N (4.5 lb)	2.59 (0.102)	5.1 (0.203)	1.14 (0.045)	802M-KY5	802M-KX	
	Side Push Horizontal Roller							802M-K1Y5	802M-KIX	
	Adjustable Side Push Rod							802M-CAFY5	802M-CAFX	
4	Top Push Rod	1 ○ ○ 2 3 ○ ○ 4 5 ○ ○ 6 7 ○ ○ 8	1 ○ ○ 2 3 ○ ○ 4 5 ○ ○ 6 7 ○ ○ 8	13.3 N (3 lb)	1.45 (0.057)	5.13 (0.202)	0.076 (0.030)	802M-BTY5	802M-BX	802M-XTY5
	Adjustable Top Push Rod							802M-BATY5	802M-BAX	
	Side Push Rod			20 N (4.5 lb)	3.18 (0.125)	5.54 (0.218)	1.14 (0.045)	802M-CTY5	802M-CX	
	Top Push Roller			14.7 N (3.5 lb)	1.45 (0.057)	5.13 (0.202)	0.076 (0.030)	802M-DTY5	802M-DX	
	Side Push Vertical Roller			20 N (4.5 lb)	3.18 (0.125)	5.54 (0.218)	1.14 (0.045)	802M-KTY5	802M-KX	
	Side Push Horizontal Roller							802M-K1TY5	802M-K1X	
	Adjustable Side Push Rod				2.59 (0.102)	5.16 (0.203)		802M-CAFTY5	802M-CAFX	

(1) The standard length of STO cable is 1.52 m (5 ft). For other lengths, see Table 11 on page 21.

Approximate Dimensions

Dimensions are shown in mm (in.). Dimensions are not intended to be used for installation purposes.

IMPORTANT Mounting foot adapter that is shown in Figure 1 and Figure 2 is for use with two-circuit 802M type switches only. For operating head and lever assembly dimensions that are not shown, see Approximate Dimensions on page 132.

Figure 1 - Side Push Types

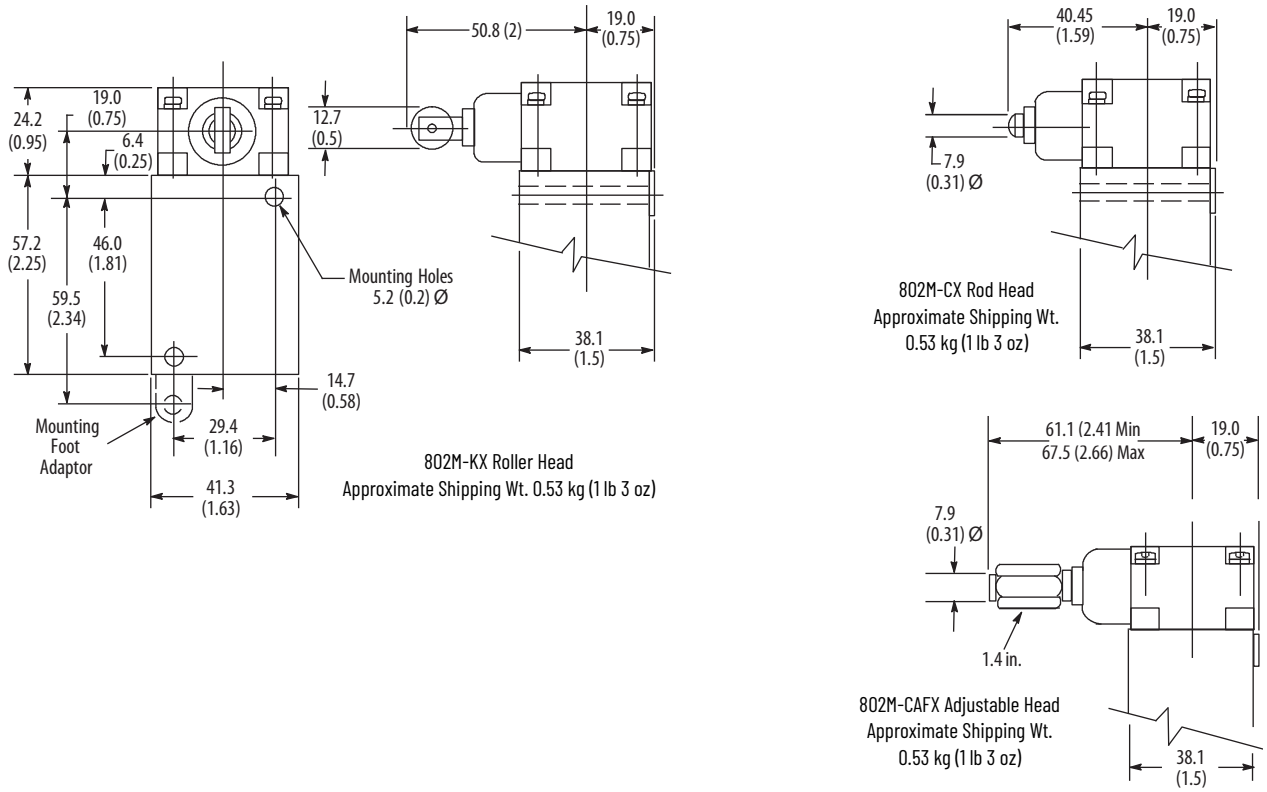

Figure 2 - Top Push Types

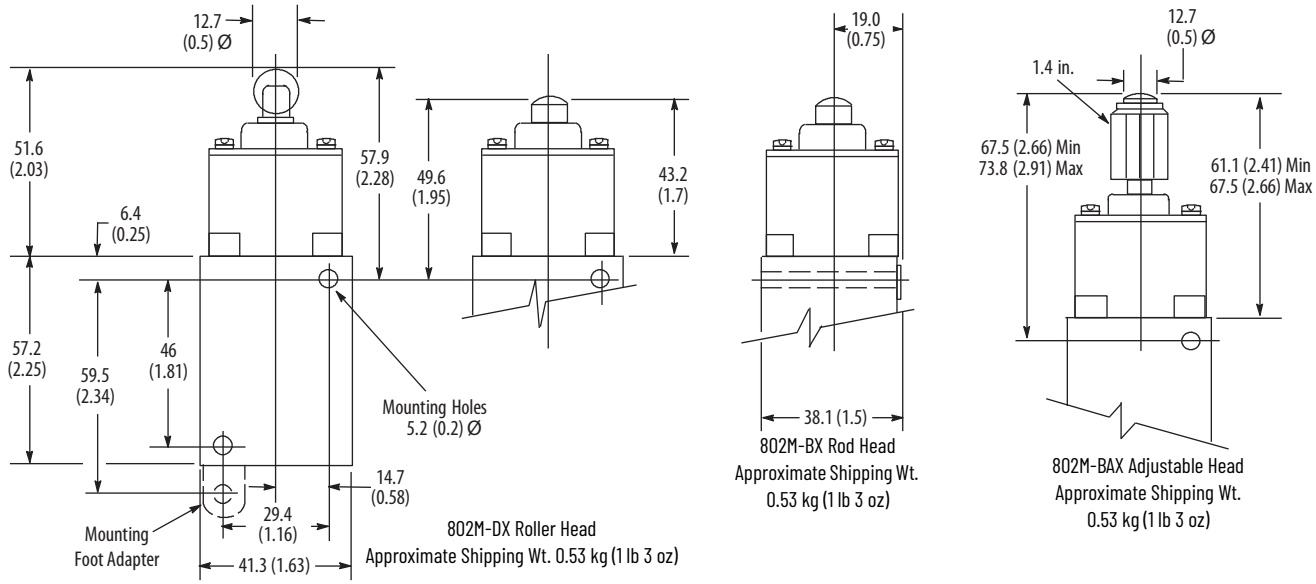

Wiring Diagrams

Two Circuits Limit Switches

IMPORTANT See applicable codes and laws.

Cable Models

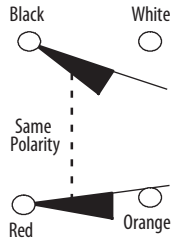

Cable Models with One Status Indicator

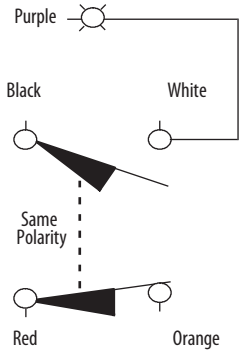

Status Indicator Wired to N.O. (White) Wire

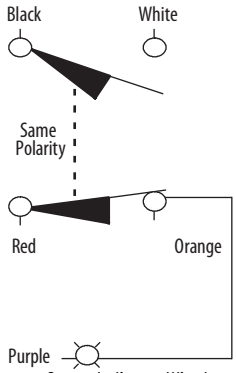

Status Indicator Wired to N.C. (Orange) Wire

5-pin Mini-type Receptacle

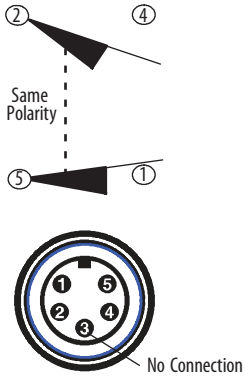

J1 Wiring

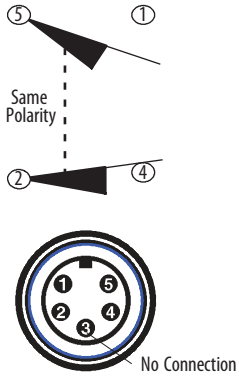

J9 Wiring

5-pin Mini-type Receptacle with One Status Indicator

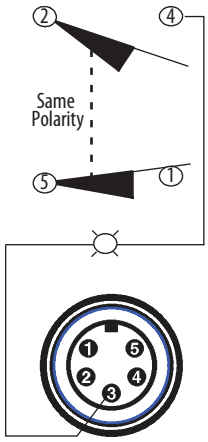

Status Indicator Wired to N.O.

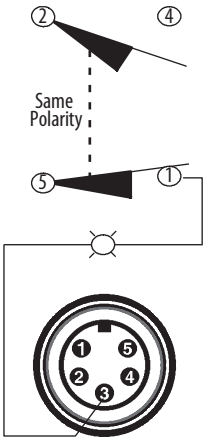

Status Indicator Wired to N.C.

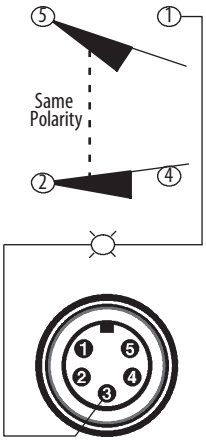

Status Indicator Wired to N.O.

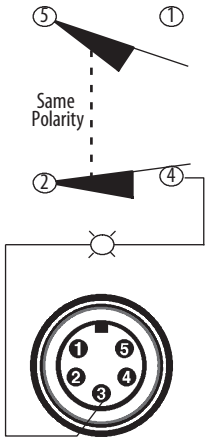

Status Indicator Wired to N.C.

4-pin Micro-type Receptacle (DC Only)

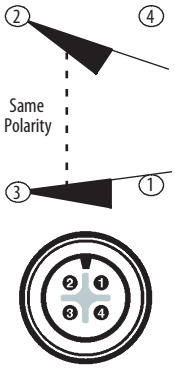

J7 Wiring

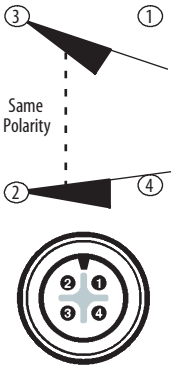

J8 Wiring

5-pin Micro-type Receptacle (DC Only)

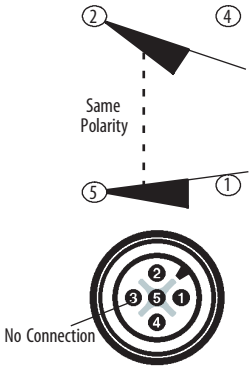

J5 Wiring

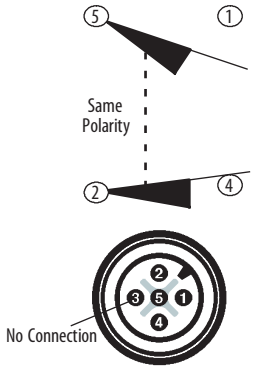

J6 Wiring

5-pin Micro-type Receptacle with Status Indicator

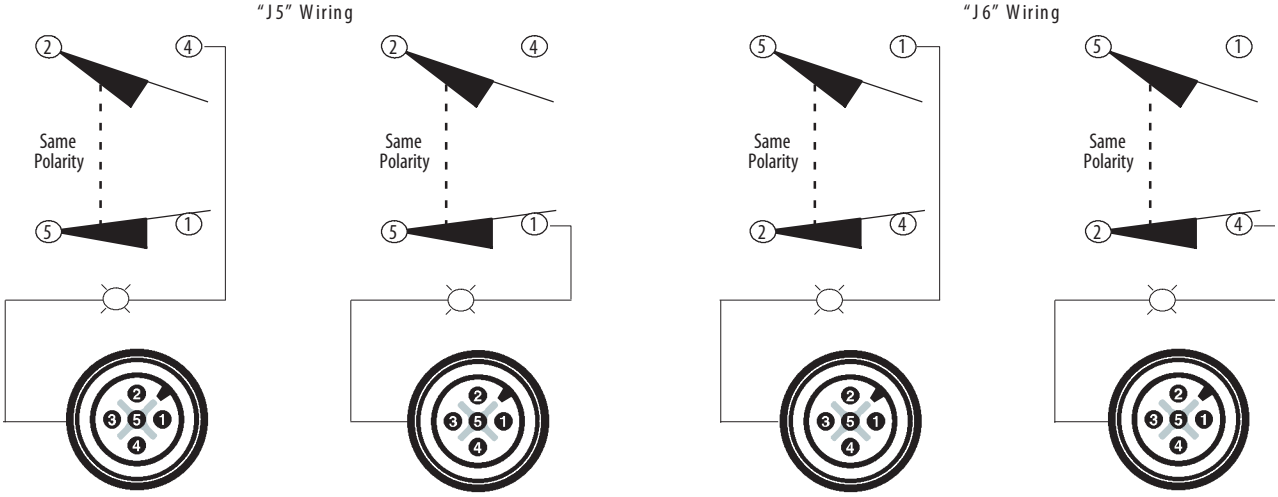

Four-circuit Limit Switches

IMPORTANT See applicable codes and laws.

Cable Models

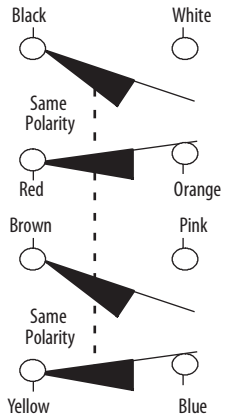

Neutral Position with Cable

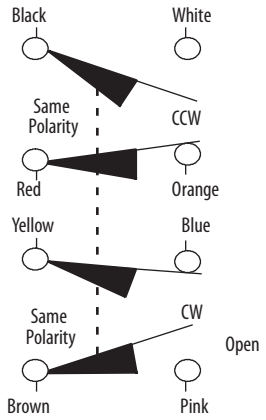

Sequential with Cable

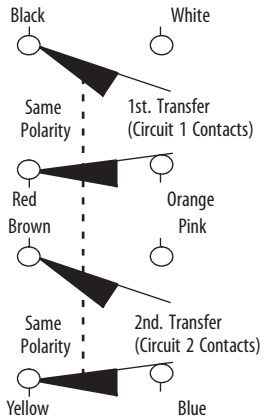

Cable Models with Two Status Indicators

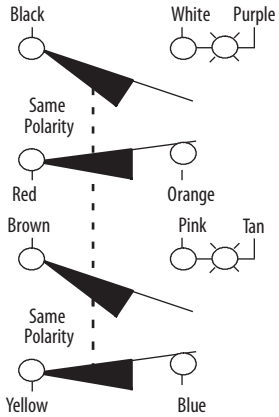

Status Indicator Wired to N.O. (White) Wire and N.O. (Pink) Wire

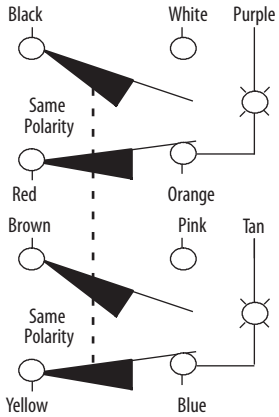

Status Indicator Wired to N.C. (Orange) Wire and N.C. (Blue) Wire

9-pin Mini-type Receptacle

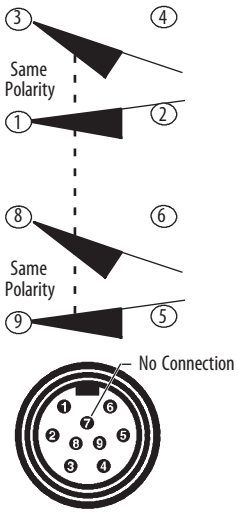

J1 Wiring

10-pin Mini-type Receptacle with Two Status Indicators

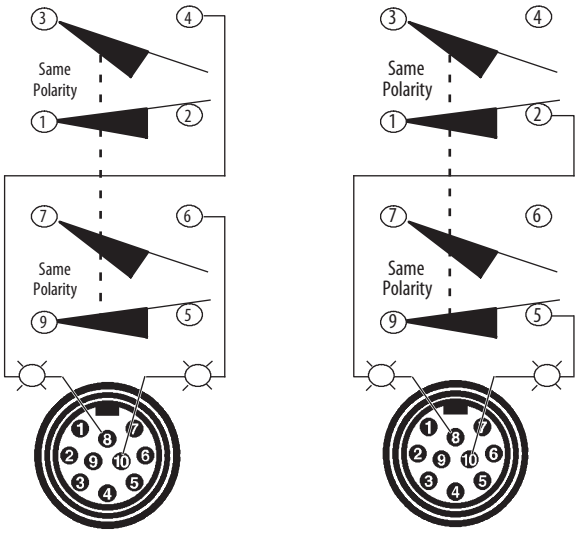

J4 Wiring
Status Indicator Wired to N.O.

J4 Wiring
Status Indicator Wired to N.C.

Modifications for 802M Limit Switches

24V DC Switches

All two-circuit Bulletin 802M limit switches are available with silver-nickel contacts rated for 24V DC applications. To order a switch rated for 24V DC use, insert the letter Z before the cable or connector designation. Example: Cat. No. 802M-AZY5 is a 24V DC version of the 802M-AY5. The use of the 24V DC micro connector option or 24V DC status indicator option require the switch be rated for 24V DC operation. Silver-nickel contacts are not available with four-circuit models.

Extended Cable Lengths

The factory-installed type STO cable is normally supplied in 1.52 m (5 ft) lengths. Extended cable lengths are available in multiples of four feet. To order, replace the suffix Y5 in the cat. no. with the appropriate suffix from Table 11. Example: To order a lever type two-circuit spring return switch with 1.83 m (8 ft) of STO [(a)] cable the cat. no. would be 802M-AY8. Cable lengths up to 96 feet are available as a special order.

Table 11 - Additional Cable Lengths

Modifications	Cat. No. Suffix
1.83 m (8 ft) cable	Y8
3.66 m (12 ft) cable	Y12
4.78 m (16 ft) cable	Y16

5-pin Mini-type Receptacle (Two-circuit Models Only)

A 5-pin, 9-pin, or 10-pin plug-in receptacle is supplied to facilitate retrofitting existing installations. The normal ground wire pin is not required and is not connected inside the switch.

802M with Mini-type Receptacle Two-circuit

To order a Bulletin 802M pre-wired limit switch with a 5-pin mini connector in place of the 1.52 m (5 ft) of STO [(a)]cable, replace the Y5 in the cat. no. with the suffix J1 or J9 depending on the wiring configuration required. Maximum voltage rating for this receptacle is 250V AC.

An appropriate female connector with cable (Cat. No. 889N-F5AFC-6F) is available.

(a) STO is a common identification of this cable. The complete identification of the cable that is used on the Bulletin 802M is STOOW, which incorporates an oil-resistant jacket and conductor insulation, for indoor and outdoor use.

Nine-pin Mini-type Receptacle (Four-circuit Models without Status Indicators Only)

A 5-pin, 9-pin, or 10-pin plug-in receptacle is supplied to facilitate retrofitting existing installations. The normal ground wire pin is not required and is not connected inside the switch.

802M with Mini-type Receptacle (Four-circuit)

To order a Bulletin 802M pre-wired limit switch with a 9-pin mini connector in place of the 1.52 m (5 ft) of STO [(a)] cable, replace the Y5 in the Cat. No. with the suffix J1. Maximum voltage rating for this receptacle is 250V AC.

An appropriate female connector with cable (Cat. No. 889N-F9AF-2) is available.

Ten-pin Mini-type Receptacle (Four-circuit Models with Two Status Indicators Only)

A 5-pin, 9-pin, or 10-pin plug-in receptacle is supplied to facilitate retrofitting existing installations. The normal ground wire pin is not required and is not connected inside the switch.

To order a Bulletin 802M prewired limit switch with a 10-pin mini connector and two status indicators, replace the Y5 in the cat. no. with the suffix J4. Maximum voltage rating for this receptacle is 250V AC. Also, specify the status indicators from Table 12 on page 23.

Example: Cat. No. 802M-ATY5 with mini connector and (2) 120V AC status indicators that are wired to one side of each N.O. contact would be Cat. No. 802M-ATJ4L1F.

An appropriate female connector with cable (Cat. No. 889N-F10AF-2) is available.

Four-pin Micro-type Receptacle (Two-circuit 24V DC Models Only)

To order a Bulletin 802M pre-wired limit switch with a 4-pin micro connector in place of the 1.52 m (5 ft) of STO [(a)] cable, replace the Y5 in the Cat. No. with the suffix J7 or J8 depending upon the wiring configuration required. This option requires that the switch is rated 24V DC.

802M with Micro-type Receptacle (Two-circuit)

An appropriate female connector with cable (Cat. No. 889D-F4AC-2) is available.

5-pin Micro-type Receptacle (Two-circuit 24V DC Models Only)

To order a Bulletin 802M pre-wired limit switch with a 5-pin micro connector in place of the 1.52 m (5 ft) of STO [(a)] cable, replace the Y5 in the cat. no. with the suffix J5 or J6 depending upon the wiring configuration required. This option requires that the switch is rated 24V DC.

An appropriate female connector with cable (Cat. No. 889D-F5AC-2) is available.

Status Indicators

Two-circuit-Bulletin 802M prewired limit switches can be supplied with a status indicator that is wired to one side of either the N.O. or N.C. contact. The second lead of the status indicator is available as a fifth conductor for wiring flexibility. See Two Circuits Limit Switches on page 19 for wiring diagrams.

802M with Status Indicator (Two-circuit)

To order, add the appropriate suffix that is listed in Table 12 on page 23 to the cat. no. Example: Cat. No. 802M-AY5 with a 120V AC light-emitting diode (LED) status indicator wired to one side of the N.O. contact would be Cat. No. 802M-AY5L1F.

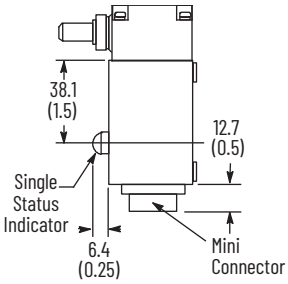

Example: Cat. No. 802M-AY5 with mini-connector and 120V AC status indicator that is wired to one side of the N.O. contact would be Cat. No. 802M-AJ1L1F.

(a) STO is a common identification of this cable. The complete identification of the cable that is used on the Bulletin 802M is STOOW, which incorporates an oil-resistant jacket and conductor insulation, for indoor and outdoor use.

Four-circuit Bulletin 802M prewired limit switches can be supplied with two status indicators that are wired to one side of each N.O. or N.C. contact of the four-circuit contact block. Second leads from each status indicator are available as ninth and tenth conductors for wiring flexibility. See Four-circuit Limit Switches on page 20 for wiring diagram.

802M with Status Indicator (Four-circuit)

To order, add the appropriate suffix that is listed in Table 12 to the cat. no.

Example: Cat. No. 802M-ATY5 with 120V AC LED status indicators wired to one side of each N.C. contact would be Cat. No. 802M-ATY5L1C.

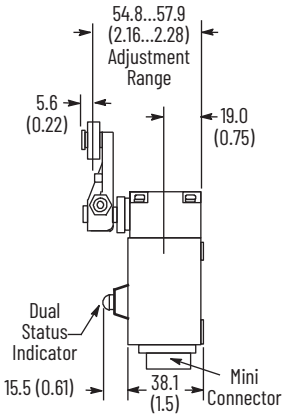

Table 12 - Status Indicators

Voltage	Wired to (1)	Cat. No. Suffix
LED		
24V DC (2)	N.O. contact	LF
	N.C. contact	LC
120V AC	N.O. contact	L1F
	N.C. contact	L1C
Neon		
120V AC 50...60 Hz	N.O. contact	NF
	N.C. contact	NC
240V AC 50...60 Hz	N.O. contact	NSF
	N.C. contact	NSC

(1) See Wiring Diagrams on page 19.
(2) Requires the switch be rated for 24V DC operation. (Not available with four-circuit models.)

Fitting for Liquid-tight Flexible Metal Conduit

Bulletin 802M 2-circuit switches can be provided with a fitting for liquid-tight flexible metal conduit (flexible metal conduit not provided) and a pigtail for wiring. Add the following suffix to the catalog number:

Suffix	Description
GS*x*	Straight-out fitting
GF*x*	Front-oriented 90° elbow fitting
GL*x*	Left-oriented 90° elbow fitting
GB*x*	Back-oriented 90° elbow fitting
GR*x*	Right-oriented 90° elbow fitting

Replace the x with a number for the pigtail length.
Example: GS5 = 5 foot long pigtail. Additional cable length over 1.5 m (5 ft) is available in multiples of 1.2 m (4 ft).

Adapter Foot

To mount a two-circuit Bulletin 802M in the same 1.16 x 2.34 in. mounting hole pattern as a Bulletin 802T, an adapter foot is required and is included with each Bulletin 802M as shipped. This accessory is made of steel and is chromate plated to resist corrosion. Order catalog number 40246-008-02 for replacement adapter feet.

Rear Mounting Adapter Kit

This kit is for rear mounting of 2-circuit or 4-circuit Bulletin 802M prewired limit switch (not suitable for use on Bulletin 802MC). Kit includes mounting plate and two screws for mounting adapter plate to switch. To mount to surface from rear use two #10-32 screws. Select proper screw length to pass through adapter plate without bottoming against back of limit switch.

Figure 3 - Cat. No. 802M-N1

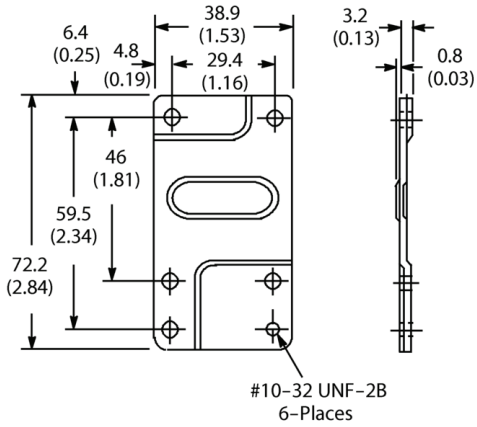

Approximate Shipping Wt. 0.2 kg (8 oz)

802MC Corrosion-resistant Prewired — Factory Sealed Switches

802MC corrosion-resistant switches have the following features:

- Prewired and factory sealed
- Corrosion resistant
- Submersible

Specifications

Attribute	Value
Certifications	UL Listed, CSA Certified, and CE Marked for applicable directives
Enclosure type rating	NEMA 1, 4X, 6P, 13; and IP66/67 (IEC 529)
Pollution degree	3
Ambient temperature (1)	0...80 °C (32...180 °F)

(1) Minimum temperature is based on the absence of freezing moisture or water.

Table 13 - AC Contact Rating (Max per Pole, 50 or 60 Hz, Two Circuits Same Polarity)

NEMA Rating Designation	Max Voltage [AC]	A		Continuous Carrying Current [A]	VA	
		Make	Break		Make	Break
A600 AC-15	120	60	6.00	10	7200	720
	240	30	3.00			
	480	15	1.50			
	600	12	1.20			

Table 14 - DC Contact Rating (Max per Pole, Two Circuits Same Polarity)

Nominal Voltage	A	Continuous Carrying Current [A]
24	1.1	5

Factory Sealed

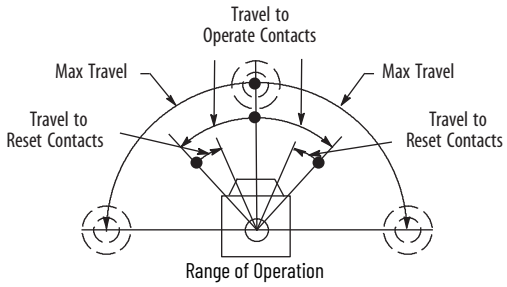

Adjustable Top Push Rod

Side Push Rod

Top Push Roller

Product Selection

Number of Circuits	Lever Movement vs. Contact Operation		Torque/Force to Operate, Max	Travel to Operate Contacts, Max	Max Travel	Travel to Reset Contacts, Max	Cat. No.		
							Switch without Lever (1)	Operator Head Only	Switch Body Only (1)
2	Clockwise or Counterclockwise	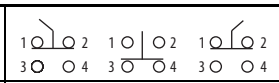	0.34 N•m (3 lb•in)	15°	86°	6°	802MC-AY5	802MC-AX	802MC-XY5
	Clockwise	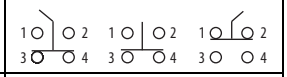					802MC-A1Y5	802MC-A1X	
	Counterclockwise	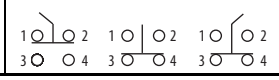					802MC-A2Y5	802MC-A2X	

(1) The standard length of STO cable is 1.52 m (5 ft). For other lengths, see Table 16 on page 27.

Approximate Dimensions

Dimensions are shown in mm (in.). Dimensions are not intended to be used for installation purposes.

IMPORTANT For operating head and lever assembly dimensions that are not shown, see Approximate Dimensions on page 132. Conduit pipe opening 1/2 in. NPT.

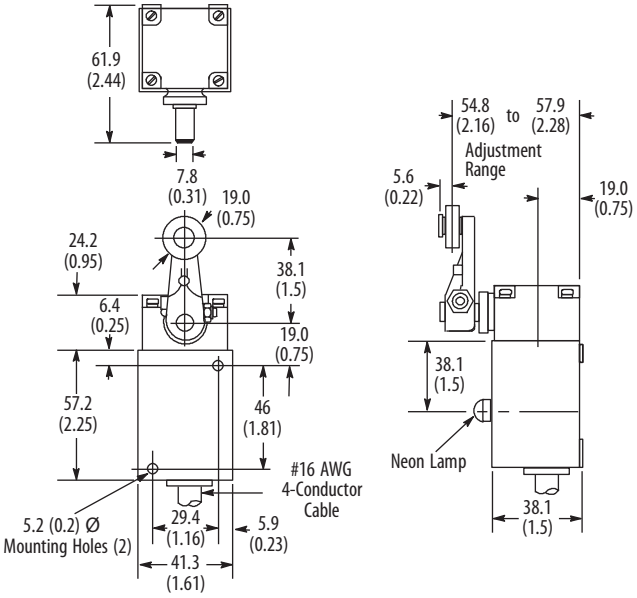

Wiring Diagrams

IMPORTANT See applicable codes and laws.

Cable Models

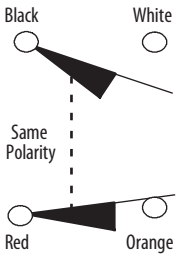

Cable Models with Status Indicator

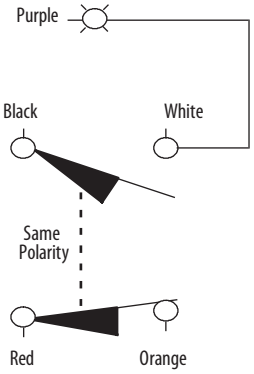

Status Indicator Wired to N.O. (White) Wire

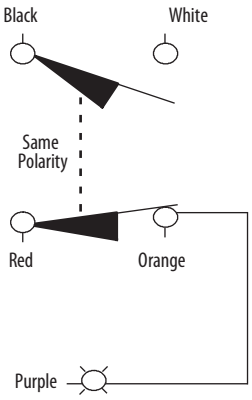

Status Indicator Wired to N.C. (Orange) Wire

5-pin Mini Receptacle

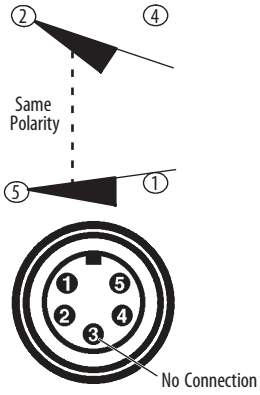

J1 Wiring

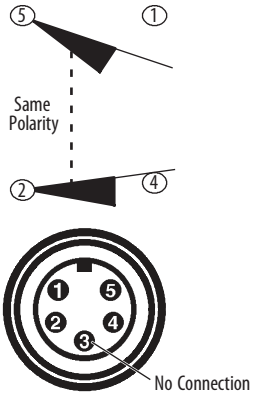

J9 Wiring

5-pin Mini-type Receptacle Status Indicator

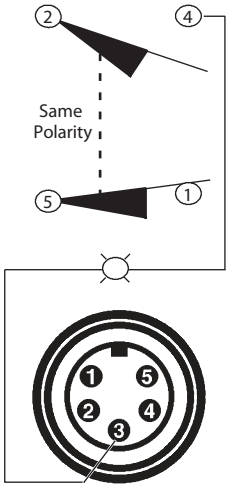

J1 Wiring
Status Indicator
Wired to N.O.

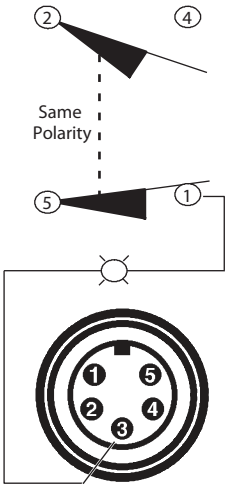

J1 Wiring
Status Indicator
Wired to N.C.

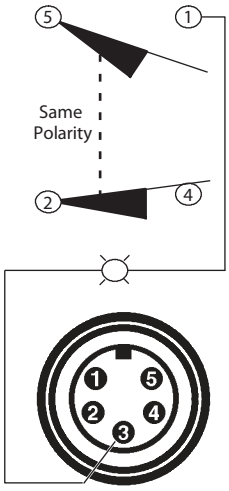

J9 Wiring
Status Indicator
Wired to N.O.

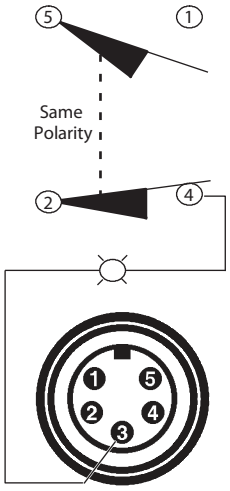

J9 Wiring
Status Indicator
Wired to N.C.

Modifications for 802MC Limit Switches

Status Indicators

Bulletin 802MC prewired limit switches can be supplied with a status indicator that is wired to one side of either the N.O. or N.C. contact. The second lead of the status indicator is available as a fifth conductor for wiring flexibility.

Neon Status Indicator

To order, add the appropriate suffix that is listed in Table 15 to the Cat. No. Example: Cat. No. 802MC-AY5 with a 120V AC LED status indicator that is wired across the N.O. contact would be Cat. No. 802MC-AY5L1F.

Table 15 - Status Indicators

Voltage	Wired to:	Cat. No. Suffix
LED		
24V DC [1]	N.O. contact	LF
	N.C. contact	LC
120V AC 50...60 Hz	N.O. contact	L1F
	N.C. contact	L1C
Neon		
120V AC 50...60 Hz	N.O. contact	NF
	N.C. contact	NC
240V AC 50...60 Hz	N.O. contact	N5F
	N.C. contact	N5C

(1) Requires switch to be rated for 24V DC operation.

5-pin Mini-type Receptacle — Two-circuit Contact Block

A 5-pin mini-type receptacle is supplied to facilitate retrofitting existing installations. The normal ground wire pin is not required and is not connected inside the switch.

To order a Bulletin 802MC pre-wired limit switch with a 5-pin mini connector in place of the 1.52 m (5 ft) of STO [a] cable, replace the Y5 in the Cat. No. with the suffix J1 or J9 depending upon the wiring configuration required. Maximum voltage rating for this receptacle is 250V AC.

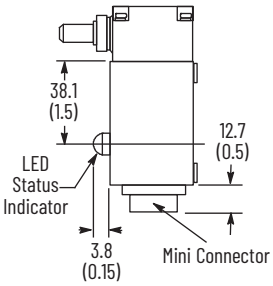

An appropriate female connector with cable (Cat. No. 889N-F5AFC-6F) is available.

Cable Lengths

The factory-installed, prewired, type STO cable is normally supplied in 1.52 m (5 ft) lengths. Extended cable lengths are available in multiples of 4 feet. To order, replace the suffix Y5 in the Cat. No. with the appropriate suffix from Table 16. Example: A lever-type spring return switch with 1.83 m (8 ft) of STO cable is Cat. No. 802MC-AY8. Cable lengths up to 96 feet are available as a special order.

Table 16 - Additional Cable Lengths

Modifications	Cat. No. Suffix
1.83 m (8 ft) cable	Y8
3.66 m (12 ft) cable	Y12
4.78 m (16 ft) cable	Y16

Two-circuit 24V DC Switches

All two-circuit Bulletin 802MC limit switches are available with silver-nickel contacts and rated for 24V DC applications. To order a switch rated for 24V DC use, insert the letter Z before the cable or connection designation. Example: Cat. No. 802MC-AZY5 is a 24V DC version of Cat. No. 802MC-AY5. The use of the 24V DC status indicator option requires the switch be rated for 24V DC operation.

(a) STO is a common identification of this cable. The complete identification of the cable that is used on the Bulletin 802M is STOOW-A, which incorporates an oil-resistant jacket and conductor insulation, for indoor and outdoor use.

Notes:

Bulletin 802R Sealed Contact Limit Switches

802R limits switches have the following features:

- A rugged single contact, hermetically sealed in a glass envelope
- High contact reliability even in contaminated atmospheres
- Enclosure is rated NEMA Type 13
- PLC compatible

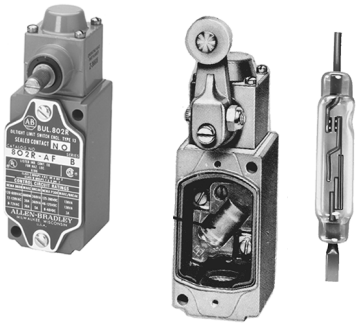

Specifications

Attribute	Value
Certifications	UL Listed and CSA Certified
Enclosure type rating	NEMA 13
Pollution degree	3
Ambient temperature	-29...+121 °C (-20...+250 °F) (1)

(1) Wobble stick and cat whisker devices are rated -18...+54 °C (0...130 °F).

Table 17 - AC Contact Rating (Max per Pole, 50 or 60 Hz, Two Circuits Same Polarity)

NEMA Rating Designation	Voltage, Max [V]	A		Continuous Carrying Current [A]	VA	
		Make	Break		Make	Break
B600	120	30	3.00	5	3600	360
	240	15	1.50			
	480	7.5	0.75			
	600	6	0.60			

Table 18 - DC Contact Rating (Max per Pole, Same Polarity)

NEMA Rating Description	Voltage Range	Current Rating
P300	115...125 230...250	1.1 A 0.55 A

Lever Type — Spring Return

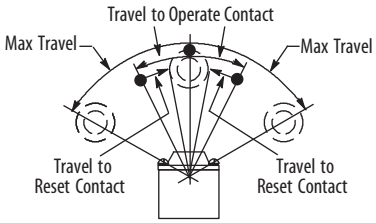

Lever Operation with Standard Levers — Range of Operation

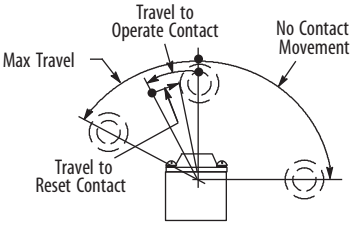

Lever Operation When One-way Levers 802T-WS7 or W8 Are Used — Range of Operation

802R-AF without Lever

802R-ALFW2

Product Selection

Table 19 - Standard and Low Operating Torque Models

Lever Movement	Torque/Force to Operate, Max	Travel to Operate Contacts, Max	Max Travel	Travel to Reset Contacts, Max	Contact Type	Cat. No.
Clockwise or counterclockwise	0.34 N•m (3 lb•in)	16°	42°	9°	N.O.	802R-AF
					N.C.	802R-AC
	0.51 N•m (4.5 lb•in)	7°	53°	3.5°	N.O.	802R-HF
					N.C.	802R-HC
Clockwise			50°	3.5°	N.O.	802R-H1F
					N.C.	802R-H1C
Counterclockwise					N.O.	802R-H2F
					N.C.	802R-H2C
Clockwise, lever cannot move counterclockwise	0.45 N•m (4 lb•in)	20°	91°	11°	N.O.	802R-L1F
					N.C.	802R-L1C
Counterclockwise, lever cannot move clockwise					N.O.	802R-L2F
					N.C.	802R-L2C
Clockwise or counterclockwise	0.09 N•m (0.78 lb•in)	22°	43°	12°	N.O.	802R-ALFW5 (1)
					N.C.	802R-ALCW5 (1)
Clockwise, lever cannot be moved counterclockwise					N.O.	802R-AL1FW5 (1)
					N.C.	802R-AL1CW5 (1)
Counterclockwise, lever cannot be moved clockwise					N.O.	802R-AL2FW5 (1)
					N.C.	802R-AL2CW5 (1)

(1) These low operating force limit switches can only be supplied with the Cat. No. 802T-W5 rod lever. The rod can easily be formed to meet special application requirements. The contact is restored to its normal position when pressure on the rod is released.

Approximate Dimensions

Dimensions are shown in mm (in.). Dimensions are not intended to be used for installation purposes.

IMPORTANT For operating head and lever assembly dimensions that are not shown, see Approximate Dimensions on page 132. Conduit pipe opening 1/2 in. NPT.

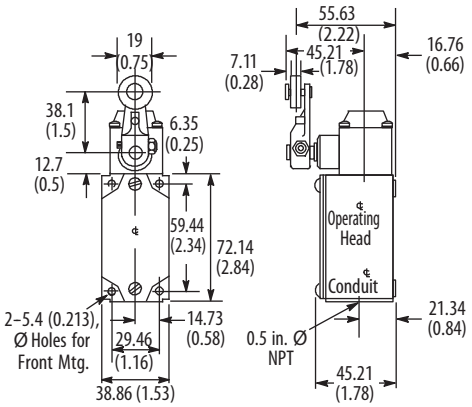

Standard Switch with 802T-W1 Lever
Shipping Wt. 0.35 kg (12.5 oz)

Lever Type – Maintained Contact

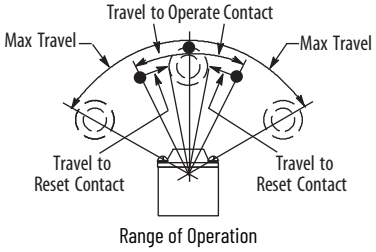

802R-AF without Lever

Product Selection

Lever Movement	Torque/Force to Operate, Max	Travel to Operate Contacts, Max	Max Travel	Travel to Reset Contacts, Max	Contact Type	Cat. No.
Clockwise or counterclockwise	0.25 N•m (2.25 lb•in)	70° (1)	84° (1)	35°	N.O.	802R-AMF
					N.C.	802R-AMC

(1) From on maintained position to the other.

Approximate Dimensions

Dimensions are shown in mm (in.). Dimensions are not intended to be used for installation purposes.

IMPORTANT For operating head and lever assembly dimensions that are not shown, see Approximate Dimensions on page 132. Conduit pipe opening 1/2 in. NPT.

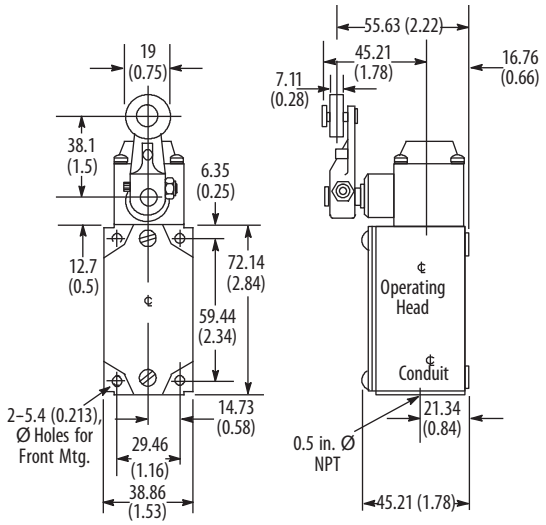

Standard Switch with 802T-W1 Lever
Shipping Wt. 0.35 kg (12.5 oz)

Push Type – Spring Return

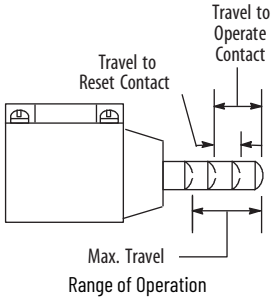

Top Push Rod

Adjustable Top Push Rod

Side Push Rod

Top Push Roller

Side Push Roller

Product Selection

Operator Type	Torque/Force to Operate, Max	Travel to Operate Contacts, Max	Max Travel	Travel to Reset Contacts, Max	Contact Type	Cat. No.
Top push rod	15.6 N (3.5 lb)	1.75 mm (0.069 in.)	5.13 mm (0.202 in.)	0.71 mm (0.028 in.)	N.O.	802R-BF
					N.C.	802R-BC
Adjustable top push rod	15.6 N (3.5 lb)	1.75 mm (0.069 in.)	5.13 mm (0.202 in.)	0.71 mm (0.028 in.)	N.O.	802R-BAF
					N.C.	802R-BAC
Side push rod	20.0 N (4.5 lb)	3.18 mm (0.125 in.)	5.54 mm (0.218 in.)	1.45 mm (0.057 in.)	N.O.	802R-CF
					N.C.	802R-CC
Top push roller	15.6 N (3.5 lb)	1.75 mm (0.069 in.)	5.13 mm (0.202 in.)	0.71 mm (0.028 in.)	N.O.	802R-DF
					N.C.	802R-DC
Side push vertical roller	20.0 N (4.5 lb)	3.18 mm (0.125 in.)	5.54 mm (0.218 in.)	1.45 mm (0.057 in.)	N.O.	802R-KF
					N.C.	802R-KC
Side push horizontal roller	20.0 N (4.5 lb)	3.18 mm (0.125 in.)	5.54 mm (0.218 in.)	1.45 mm (0.057 in.)	N.O.	802R-K1F
					N.C.	802R-K1C

Approximate Dimensions

Dimensions are shown in mm (in.). Dimensions are not intended to be used for installation purposes.

IMPORTANT For operating head and lever assembly dimensions that are not shown, see Approximate Dimensions on page 132. Conduit pipe opening 1/2 in. NPT.

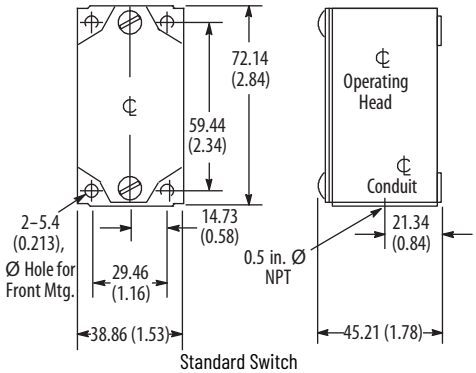

Standard Switch
Shipping Wt. 0.35 kg (12.5 oz)

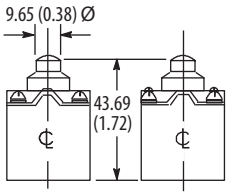

Z-36615
Top Push Rod Head
Shipping Wt. 0.12 kg (4.25 oz)

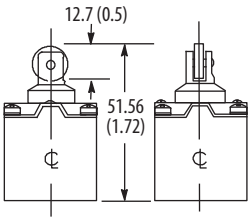

Z-36618
Top Push Roller Head
Shipping Wt. 0.12 kg (4.25 oz)

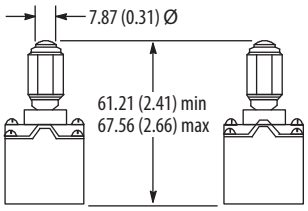

40182-022-52
Adjustable Top Push Rod Head
Shipping Wt. 0.12 kg (4.25 oz)

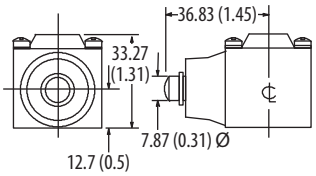

Z-36616
Side Push Rod Head
Shipping Wt. 0.12 kg (4.25 oz)

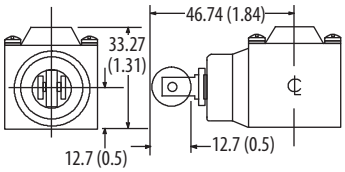

Z-36622
Side Push Vertical Roller Head
Shipping Wt. 0.12 kg (4.25 oz)

Wobble Stick and Cat Whisker — Spring Return

IMPORTANT Mount these switches in a way that the wobble stick or cat whisker cannot be deflected beyond the maximum travel position to avoid excessive backlash, which could case undesirable repetition of contact action.

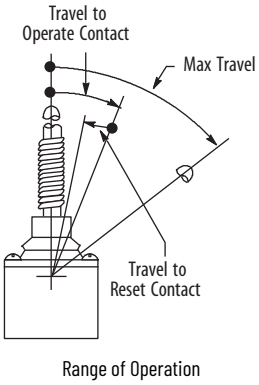

Product Selection

Type	Torque/Force to Operate, Max	Travel to Operate Contacts, Max	Max Travel	Travel to Reset Contacts, Max	Contact Type	Cat. No. (1)
Wire wobble stick	0.51 N•m (4.5 lb•in)	11°	11°	5°	N.O.	802R-WS1F
					N.C.	802R-WS1C
Wire cat whisker	0.06 N•m (8 oz•in)	25°	25°	14°	N.O.	802R-CWF
					N.C.	802R-CWC

(1) Ambient temperature -18...+54 °C (0...130 °F)

Approximate Dimensions

Dimensions are shown in mm (in.). Dimensions are not intended to be used for installation purposes.

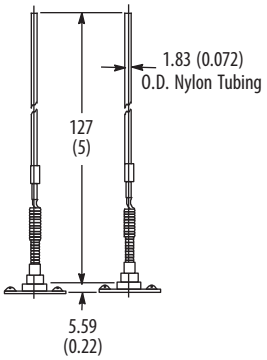

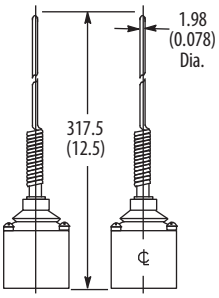

Modifications for Transparent Cover

Switches can be furnished with a gasketed, transparent plastic cover. This modification enables the electrician to inspect terminal wiring without removing the switch cover. To order, add the letter Z to the Cat. No. of the standard switch. Example: Cat. No. 802R-DF becomes 802R-DFZ.

Conduit Seal (Cat. No. 802T-N3)

A synthetic rubber conduit seal is available to protect the conduit opening against the ingress of oil into the wiring compartment. Each wire hole in the seal has a thin inner wall that is pierced when a wire is passed through. Thus, any unused opening remains sealed.

Special Conduit Locknut (Cat. No. 802T-X4)

This option, a "Tru-Seal" locknut with threaded PTFE insert, is a valuable accessory for any Bulletin 802R that is connected with conduit.

NPT to Metric Thread Adapter

Brass 1/2 in. NPT thread to M20 thread adapter. Used with metric cable glands where conduit entry switch has American NPT tapered threads. Compatible with all 1/2 in. NPT conduit entry limit switches, this adapter is valuable accessory for any product that requires conduit-entry conversion to be compatible with metric thread.

802T Plug-in Style NEMA Oiltight Limit Switches

802R-AF

Specifications

Attribute	Value
Certifications	UL Listed, CSA Certified, and CE Marked for applicable directives
Enclosure type rating	NEMA 4, 13, 6P, and IP67
Pollution degree	3
Ambient temperature (1)	-18...+110 °C (0...230 °F)

(1) Wobble stick and cat whisker devices are rated from -18...+54 °C (0...130 °F)

Table 20 - AC Contact Rating (Max per Pole, 50 or 60 Hz, Two Circuits Same Polarity)

NEMA Rating Designation	Max Voltage	A		Continuous Carrying Current	VA	
		Make	Break		Make	Break
A600 AC-15	120	60	6.00	10	7200	720
	240	30	3.00			
	480	15	1.50			
	600	12	1.20			
B600 AC-15	120	30	3	5	3600	360
	240	15	1.50			
	480	7.5	0.75			
	600	6	0.60			

Table 21 - AC Contact Rating (Max per Pole, 50 or 60 Hz, Four Circuits Same Polarity)

NEMA Rating Designation	Max Voltage	A		Continuous Carrying Current	VA	
		Make	Break		Make	Break
A300	120	60	6.00	10	7200	720
	240	30	3.00			

Table 22 - DC Contact Rating (Max per Pole)

Circuits	Voltage Range	Current Range
2	115...125 230...250 550...600	0.4 A 0.2 A 0.1 A
4	115...125 230...250	0.4 A 0.2 A

Lever Type – Spring Return

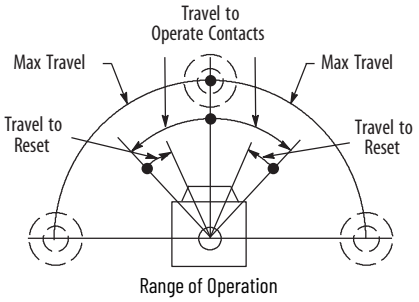

Switch without Lever

Switch without Lever and Base

Product Selection

Number of Circuits	Lever Movement vs. Contact Operation		Torque/Force to Operate, Max	Travel to Operate Contacts, Max	Max Travel	Travel to Reset Contacts, Max	Cat. No.	
							Switch without Lever	Switch without Lever and Base
2	Clockwise or counterclockwise	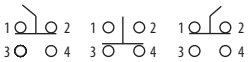	0.29 N•m (2.6 lb•in) Nominal	13° 18°	90°	7°	802T-AP	802T-AP1
							802T-A5P (1)	802T-A5P1 (1)
				5° Nominal		2.5° Nominal	802T-FP	802T-FP1
			0.56 N•m (5 lb•in)	9°		3.5°	802T-HP	802T-HP1
	Clockwise	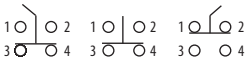	0.29 N•m (2.6 lb•in)	13° 18°		7°	802T-A1P	802T-A1P1
							802T-A3P (1)	802T-A3P1 (1)
			0.56 N•m (5 lb•in)	9°		3.5°	802T-H1P	802T-H1P1
	Counterclockwise	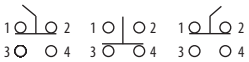	0.29 N•m (2.6 lb•in)	13° 18°		7°	802T-A2P	802T-A2P1
							802T-A4P (1)	802T-A4P1 (1)
			0.56 N•m (5 lb•in)	9°		3.5°	802T-H2P	802T-H2P1
	Clockwise or counterclockwise	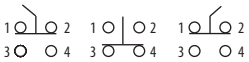	0.16 N•m (1.5 lb•in)	13°		7°	802T-ALP (2)	802T-ALP1 (2)
	Clockwise	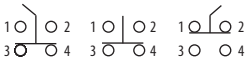					802T-AL1P (2)	802T-AL1P1 (2)
	Counterclockwise	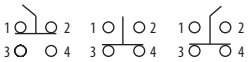					802T-AL2P (2)	802T-AL2P1 (2)
4	Clockwise or counterclockwise	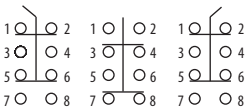	0.45 N•m (4 lb•in)	13°		7°	802T-ATP	802T-ATP1
			0.79 N•m (7 lb•in)	9°		3.5°	802T-HTP	802T-HTP1
	Clockwise	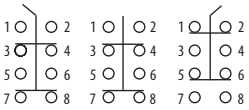	0.45 N•m (4 lb•in)	13°		7°	802T-A1TP	802T-A1TP1
			0.79 N•m (7 lb•in)	9°		3.5°	802T-H1TP	802T-H1TP1
	Counterclockwise	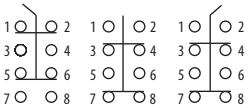	0.45 N•m (4 lb•in)	13°		7°	802T-A2TP	802T-A2TP1
			0.79 N•m (7 lb•in)	9°		3.5°	802T-H2TP	802T-H2TP1

(1) Fluorinated elastomer shaft seal is supplied with these devices.
(2) Low operating torque model.

Approximate Dimensions

Dimensions are shown in mm (in.). Dimensions are not intended to be used for installation purposes.

IMPORTANT For operating head and lever assembly dimensions that are not shown, see Approximate Dimensions on page 132. Conduit pipe opening 1/2 in. NPT.

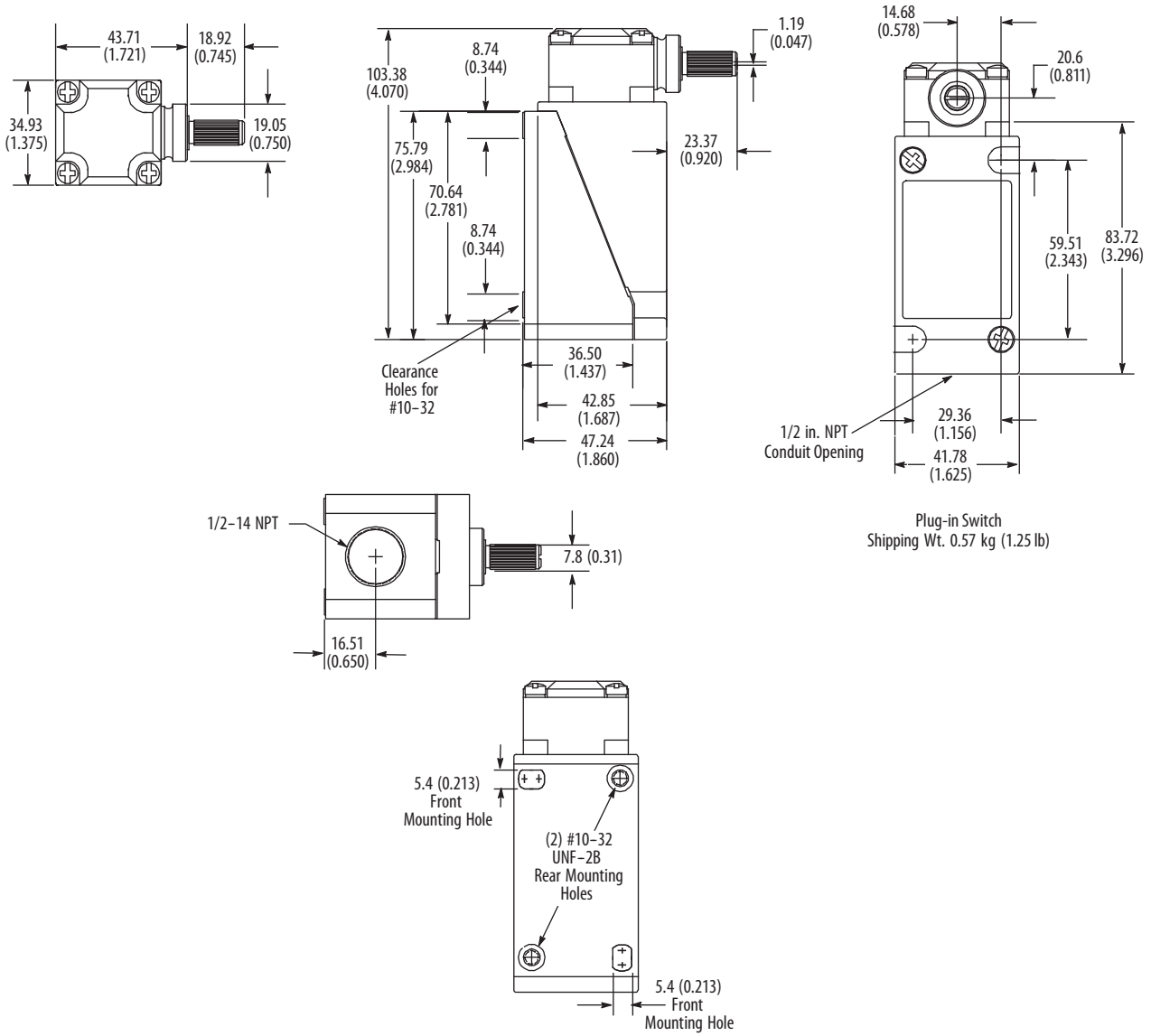

Lever Type — Maintained Contact and Neutral Position

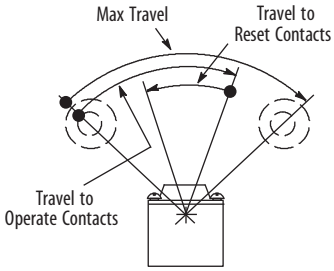

Maintained Contact Models Range of Operation

Switch without Lever

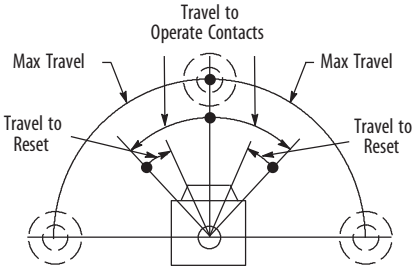

Neutral Position Models Range of Operation

Switch without Lever and Base

Product Selection

Table 23 - Maintained Contact Models

Number of Circuits	Lever Movement vs. Contact Operation		Torque/Force to Operate, Max	Travel to Operate Contacts, Max	Max Travel	Travel to Reset Contacts, Max	Cat. No.	
							Switch without Lever	Switch without Lever and Base
2	Clockwise or Counterclockwise	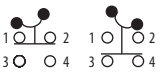	0.31 N•m (2.75 lb•in)	70° (1)	88° (1)	32°	802T-AMP	802T-AMP1
4		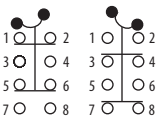	0.32 N•m (2.8 lb•in)				802T-AMTP	802T-AMTP1

(1) From one maintained position to another.

Table 24 - Neutral Position Models

Lever Movement vs. Contact Operation	Torque/Force to Operate, Max		Travel to Operate Contacts, Max	Max Travel	Travel to Reset Contacts, Max	Cat. No.	
	Clockwise	Counter-clockwise				Switch without Lever	Switch without Lever and Base
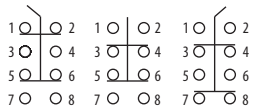	0.28 N•m (2.5 lb•in)	0.47 N•m (4.2 lb•in)	13°	75°	7°	802T-NPTP	802T-NPTP1

Approximate Dimensions

Dimensions are shown in mm (in.). Dimensions are not intended to be used for installation purposes.

IMPORTANT For operating head and lever assembly dimensions that are not shown, see Approximate Dimensions on page 132. Conduit pipe opening 1/2 in. NPT.

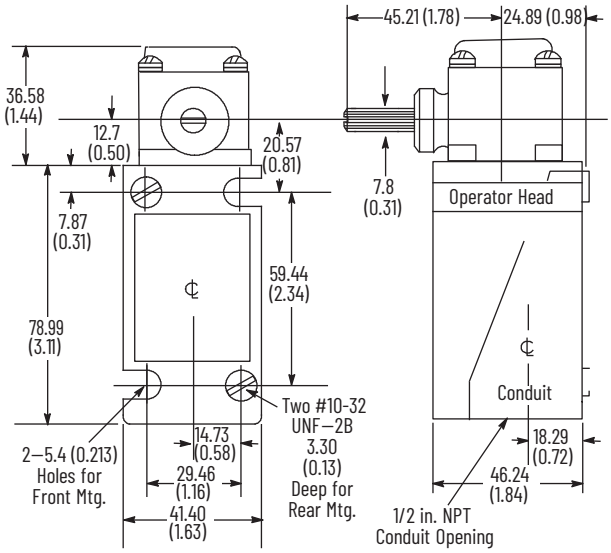

Plug-in Switch
Shipping Wt. 0.57 kg (1.25 lb)

Push Type — Spring Return

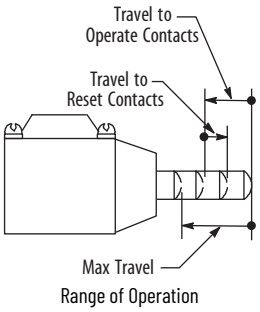

Top Push Rod

Adjustable Top Push Rod

Side Push Rod

Top Push Roller

Side Push Horizontal Roller

Product Selection

Number of Circuits	Contact Operation		Operator Type	Torque/Force to Operate, Max	Travel to Operate Contacts, Max [mm (in.)]	Max Travel [mm (in.)]	Travel to Reset Contacts, Max [mm (in.)]	Cat. No.	
	Normal	Operated						Switch without Lever	Switch without Lever and Base
2	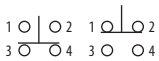		Top push rod	13.8 N (3.1 lb)	1.4 (0.057)	6.0 (0.236)	0.7 (0.028)	802T-BP	802T-BP1
			Adjustable top push rod					802T-BAP	802T-BAP1
			Side push rod	16.4 N (3.7 lb)	3.3 (0.131)	5.7 (0.226)	1.3 (0.052)	802T-CP	802T-CP1
			Top push roller	13.8 N (3.1 lb)	1.4 (0.057)	6.0 (0.236)	0.7 (0.028)	802T-DP	802T-DP1
			Side push vertical roller	16.4 N (3.7 lb)	3.3 (0.131)	5.7 (0.226)	1.3 (0.052)	802T-KP	802T-KP1
			Side push horizontal roller					802T-K1P	802T-K1P1
4	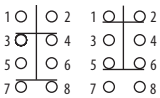		Top push rod	22.2 N (5.0 lb)	1.4 (0.057)	6.0 (0.236)	0.7 (0.028)	802T-BTP	802T-BTP1
			Adjustable top push rod					802T-BATP	802T-BATP1
			Side push rod	24.9 N (5.6 lb)	3.3 (0.131)	5.7 (0.226)	1.3 (0.052)	802T-CTP	802T-CTP1
			Top push roller	22.2 N (5.0 lb)	1.4 (0.057)	6.0 (0.236)	0.7 (0.028)	802T-DTP	802T-DTP1
			Side push vertical roller	24.9 N (5.6 lb)	3.3 (0.131)	5.7 (0.226)	1.3 (0.052)	802T-KTP	802T-KTP1
			Side push horizontal roller					802T-K1TP	802T-K1TP1

Approximate Dimensions

Dimensions are shown in mm (in.). Dimensions are not intended to be used for installation purposes.

IMPORTANT For operating head and lever assembly dimensions that are not shown, see Approximate Dimensions on page 132. Conduit pipe opening 1/2 in. NPT.

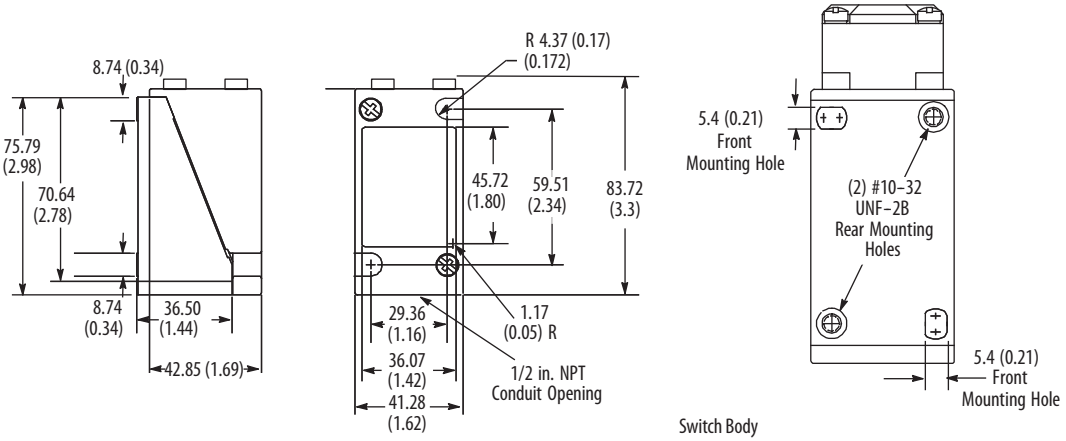

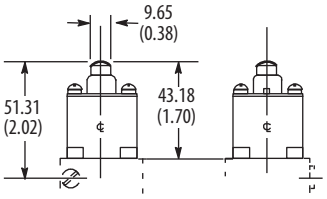

40146-013-59
Top Push Rod Head
Shipping Wt. 0.142 kg (5 oz)

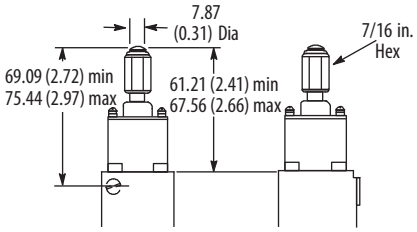

40146-013-65
Adjustable Top Push Rod Head
Shipping Wt. 0.142 kg (5 oz)

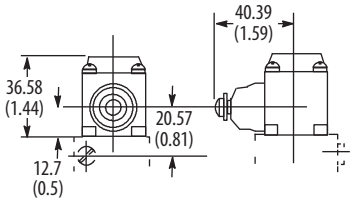

40146-017-63
Side Push Rod Head
Shipping Wt. 0.142 kg (5 oz)

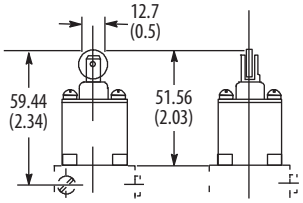

40146-013-60
Top Push Roller Head
Shipping Wt. 0.142 kg (5 oz)

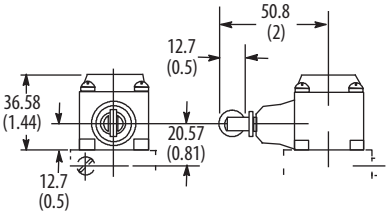

40146-017-64
Side Push Roller Head
Shipping Wt. 0.142 kg (5 oz)

Wobble Stick and Cat Whisker – Spring Return

IMPORTANT Mount these switches in a way that the wobble stick or cat whisker cannot be deflected beyond the maximum travel position to avoid excessive backlash, which could case undesirable repetition of contact action.

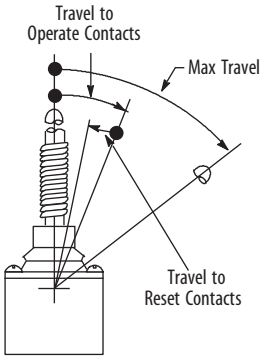

Range of Operation

Wobble Stick Nylon Extension

Wobble Stick Wire Extension

Wobble Stick Wire Extension

Product Selection

Operator Type	Contact Operation	Torque/Force to Operate, Max (1)	Travel to Operate Contacts, Max (1)	Max Travel (1)	Travel to Reset Contacts, Max (1)	Cat. No.	
						Complete Switch	Switch Without Base
Nylon wobble stick	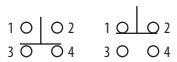	0.51 N•m (4.5 lb•in)	9°	10°	5°	802T-WSP	802T-WSP1
Wire wobble stick						802T-WS1P	802T-WS1P1
Wire cat whisker		0.06 N•m (8 oz•in)	21°	28°	14°	802T-CWP	802T-CWP1

(1) Operating travels and torque are measured at the rigid section of the stick or cat whisker.

Approximate Dimensions

Dimensions are shown in mm (in.). Dimensions are not intended to be used for installation purposes.

IMPORTANT For operating head and lever assembly dimensions that are not shown, see Approximate Dimensions on page 132. Conduit pipe opening 1/2 in. NPT.

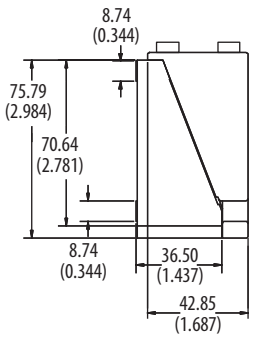

Switch Body

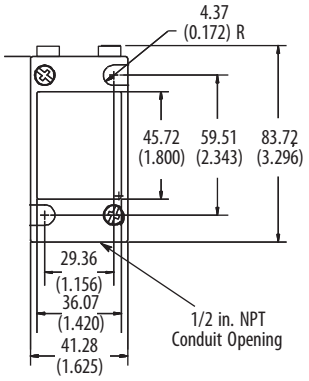

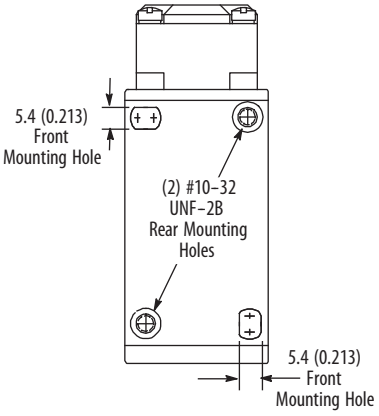

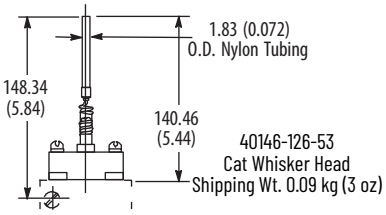

40146-126-53
Cat Whisker Head
Shipping Wt. 0.09 kg (3 oz)

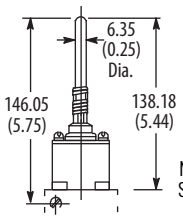

40146-113-53
Nylon Wobble Stick Head
Shipping Wt. 0.2 kg (7 oz)

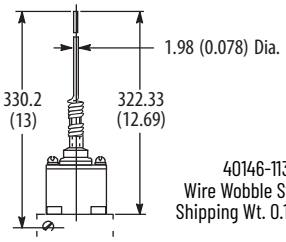

40146-113-59
Wire Wobble Stick Head
Shipping Wt. 0.17 kg (6 oz)

802T Low Energy Lever Type

Specifications

Attribute	Value
Certifications	CE Marked for all applicable directives, UL Listed, and CSA Certified
Enclosure type rating	NEMA 4, 13, and 6P [1]
Ambient temperature [2]	-18...+110 °C (0...230 °F) Low temperature model: -40...+110 °C (-40...+230 °F)
Input voltage	5...28V DC
Contact rating	• 0.40V A load per pole max • 0.025V A load per pole min

(1) 6P only applies to lever type, except for low torque.
(2) Temperature range below 0 °C (32 °F) is based on the absence of freezing moisture or water.

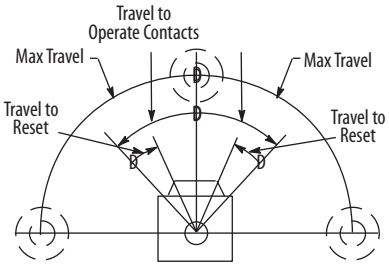

Range of Operation

Switch without Lever

Low Energy Lever Type — Spring Return

Product Selection

Table 25 - Standard and Low Operating Torque Models

Number of Circuits	Contact Operation for Clockwise or Counterclockwise Movement	Torque to Operate, Max [N•m (lb•in)]	Travel to Operate Contacts, Max	Max Travel	Travel to Reset Contacts	Switch Type	Cat. No. Switch without Lever
2	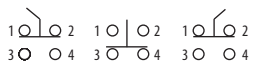	0.29 (2.6)	13°	90°	7°	Conduit	802T-AGP
All low energy limit switches are designed to operate in an ambient temperature of -18...+110°C (0...230°F). This 802T-AGPE limit switch is modified for low temperature operation at -40...+110°C (-40...+230°F). All other specifications are identical to the 802T-AGP.						Conduit/low temperature	802T-AGPE
Identical to 802T-AGP but with prewired 5-pin mini connector.				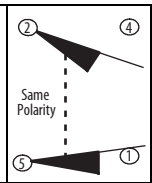		Mini connector	802T-AGPJ1 [1]
2	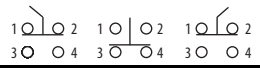	0.106 (0.94)	13°	90°	7°	Conduit/low torque	802T-ALGP

(1) Recommended standard cordset is Cat. No. 889N-F5AFC-6F (straight female 5-pin mini to flying leads, 1.8 m (6 ft) long). For additional cable lengths or styles, contact your local Allen-Bradley distributor or Rockwell Automation sales office.

Approximate Dimensions

Dimensions are shown in mm (in.). Dimensions are not intended to be used for installation purposes.

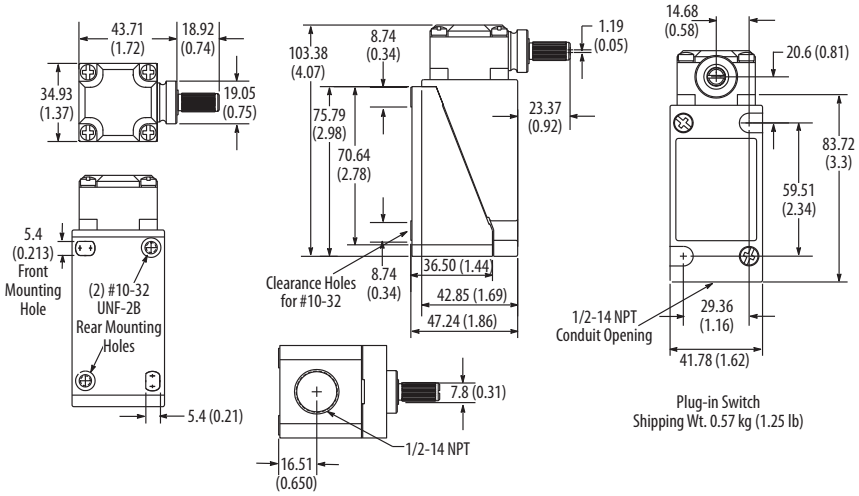

Low Energy Push Type – Spring Return

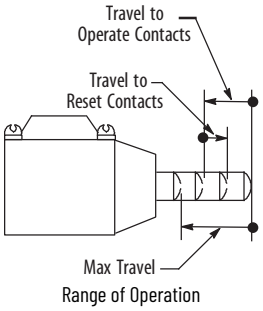

Push Side Rod

Top Push Roller

Side Push Horizontal Roller

Product Selection

Number of Circuits	Contact Operation		Operator Type	Force to Operate, Max [N (lbf)]	Travel to Operate Contacts, Max [mm (in.)]	Max Travel [mm (in.)]	Travel to Reset Contacts, Max [mm (in.)]	Cat. No.
	Normal	Operated						
2	1 ○ ○ 2 3 ○ ○ 4	1 ○ ○ 2 3 ○ ○ 4	Side push rod	16.4 (3.68)	3.3 (0.131)	5.7 (0.226)	1.3 (0.052)	802T-CGP
			Top push roller	13.8 (3.1)	1.4 (0.057)	6.0 (0.236)	0.7 (0.028)	802T-DGP
			Side push vertical roller	16.4 (3.68)	3.3 (0.131)	5.7 (0.226)	1.3 (0.052)	802T-KGP

Approximate Dimensions

Dimensions are shown in mm (in.). Dimensions are not intended to be used for installation purposes.

IMPORTANT For operating head and lever assembly dimensions that are not shown, see Approximate Dimensions on page 132. Conduit pipe opening 1/2 in. NPT.

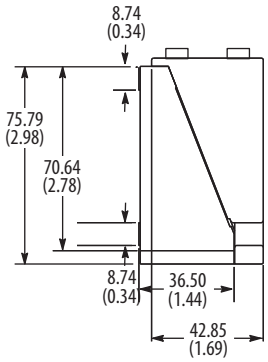

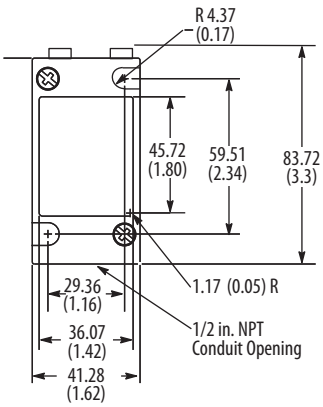

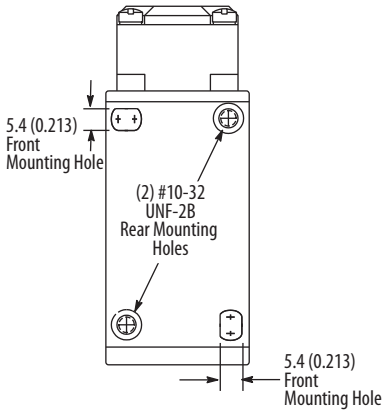

Switch Body

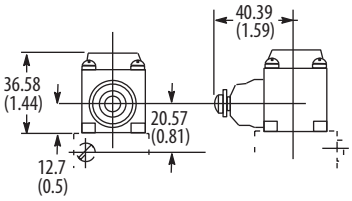

40146-017-63
Side Push Rod Head
Shipping Wt. 0.142 kg (5 oz)

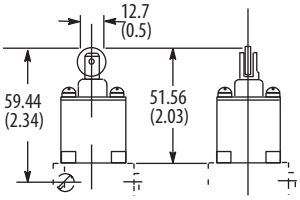

40146-013-60
Top Push Roller Head
Shipping Wt. 0.142 kg (5 oz)

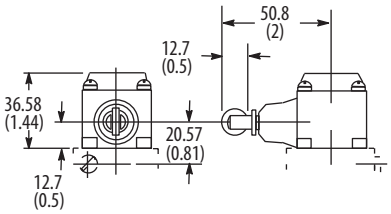

40146-017-64
Side Push Roller Head
Shipping Wt. 0.142 kg (5 oz)

Bulletin 802T Plug-in Limit Switch Modifications and Accessories

Manifold Mount

All two-circuit plug-in limit switches can be supplied with a special terminal base that permits mounting the switch manifold style on a machine base, panel, or raceway. This base is supplied with a wiring hole and gasket on the back.

To order a manifold mount switch, add the letter U to the listed Cat. No. Example: Cat. No. 802T-AP becomes Cat. No. 802T-APU.

Status Indicator

Bulletin 802T two-circuit plug-in limit switches (except for the cat whisker, wobble stick, and manifold mount devices) can be supplied with a status indicator. To order add the letter N for 120V AC, 50/60 Hz or N5 for 240V AC 50/60 Hz. Example: Cat. No. 802T-AP becomes Cat. No. 802T-APN.

The status indicator is internally connected to two isolated terminals in the base assembly allowing you to wire the status indicator to either the N.O. or the N.C. contact. Switches with a status indicator have a contact rating of NEMA A300.

Where a status indicator and a prewired 5-pin mini connector are used, the status indicator is prewired to the N.C. contact with J1 wiring and to the N.O. contact with J9 wiring. Status indicators are not available on 4-circuit 802T switches.

Fluorinated Elastomer Seals

To order limit switches with all fluorinated elastomer seals, add the letter V to the end of the listed Cat. No. Not available on manifold mount, low operating torque, low temperature, or limit switches with a status indicator.

To order lever type limit switches with the fluorinated elastomer shaft seal only, add V1 to the end of the listed catalog number.

Base Assembly

The limit switch base, including the terminal block, is available as a separate unit per the following table.

Description	Cat. No.
Two-circuit base	802T-X7
Two-circuit base with status indicator	802T-X7N
Two-circuit manifold mount base	802T-X7U
Four-circuit base	802T-X8

NPT to Metric Thread Adapter

Brass 1/2 in. NPT thread to M20 thread adapter. Used with metric cable glands where conduit entry switch has American NPT tapered threads. Compatible with all 1/2 in. NPT conduit entry limit switches, this adapter is valuable accessory for any product that requires conduit entry conversion to be compatible with metric thread.

Description	Cat. No.
Conduit adapter - 1/2 in. NPT to M20 metric thread	802T-X5

Low Temperature Operation

Plug-in limit switches are designed to operate in an ambient temperature range of -18...+110 °C (0...230 °F), -18...+54 °C (0...130 °F) for wobble stick and cat whisker. Special limit switches modified for low temperature operation at -40...+110 °C (-40...+230 °F) are available. Temperature ranges below 0 °C (32 °F) are based on the absence of freezing moisture or water. To order, add the letter E to Cat. No. Not available on wobble stick, cat whisker, or prewired cable switches; standard on low torque and maintained devices.

Prewired Cable

To order factory-installed, prewired type "STOOW" cable for 2-circuit (5-conductor) and 4-circuit (9-conductor) switches, add the suffix Y plus the number of feet required. Example: Cat. No. 802T-AP becomes Cat. No. 802T-APY5 (for a limit switch with 1.5 m (5 ft) of cable). The standard cable length is 1.5 m (5 ft). Extended cable lengths are available only in multiples of 1.22 m (4 ft) up to 29.26 m (96 ft) for special orders.

MIni-type Receptacles

To order a Bulletin 802T prewired limit switch with a 5-pin (two circuit) or 9-pin (four circuit) mini connector, add the suffix J1 or J9 depending on the desired wiring (J9 wiring not available for 4-circuit models).

Figure 4 - Five-pin Mini-Type Receptacle

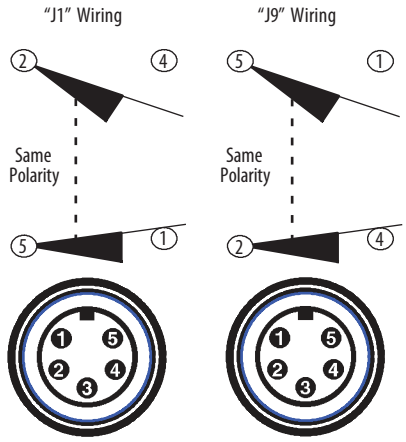

An appropriate female connector with cable (Cat. No. 889N-F5AFC-6F) is available.

Figure 5 - Nine-Pin Mini-Type Receptacle

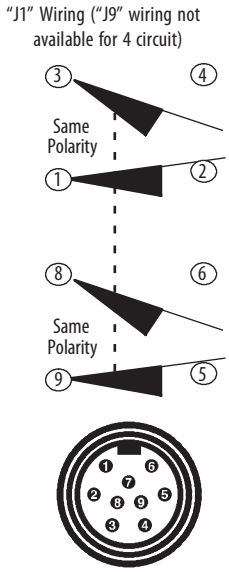

An appropriate female connector with cable (Cat. No. 889N-F9AF-2) is available.

802T NonPlug-in Style NEMA Oiltight Switches

802T nonplug-in style oiltight switches include the following features:

- Side rotary, wobble stick, cat whisker, adjustable top and top or side push styles, with or without rollers
- Rugged construction
- Proven reliability

Specifications

Attribute	Value
Certifications	UL Listed, CSA Certified, and CE Marked for all applicable directives
Enclosure type rating	NEMA 13, IP54
Ambient temperature (1)	-18...+54 °C (0...130 °F)
Pollution degree	3

(1) Temperature range below 0 °C (32 °F) is based on the absence of freezing moisture or water.

Table 26 - AC Contact Rating (Maximum per Pole, 50 or 60 Hz, Same Polarity)

NEMA Rating Designation	Max AC Voltage	A		Continuous Carrying Current (A)	VA	
		Make	Break		Make	Break
A600 AC-15	120	60	6.00	10	7200	720
	240	30	3.00			
	480	15	1.50			
	600	12	1.20			

Table 27 - DC Contact Rating (Maximum per Pole, Same Polarity)

Voltage Rating	Current Rating
115...125V	0.4 A
230...250V	0.2 A
550...600V	0.1 A

Two-circuit Lever Type – Spring Return

Product Selection

Lever Movement vs. Contact Operation		Torque/Force to Operate, Max	Travel to Operate Contacts, Max	Max Travel	Travel to Reset Contacts, Max	Cat. No.
Clockwise or counterclockwise	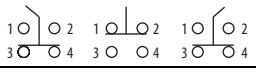	0.34 N•m (3 lb•in)	16.5°	43°	8°	802T-A
		0.51 N•m(4.5 lb•in)	6°	50°	3°	802T-H
Clockwise	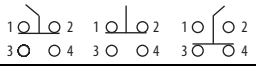	0.40 N•m (3.5 lb•in)	16.5°	43°	8°	802T-A1
		0.51 N•m (4.5 lb•in)	6.5°	50°	3°	802T-H1
Counterclockwise	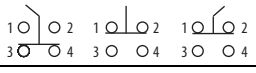	0.40 N•m (3.5 lb•in)	16.5°	43°	8°	802T-A2
		0.51 N•m (4.5 lb•in)	6.5°	50°	3°	802T-H2
Clockwise lever cannot move counterclockwise	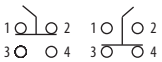	0.45 N•m (4 lb•in)	20°	91°	11°	802T-L1
Counterclockwise lever cannot move clockwise	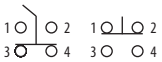					802T-L2
Clockwise or counterclockwise	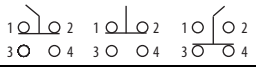	0.09 N•m (12.5 oz•in)	22°	43°	12°	802T-ALW5 (1)
Clockwise	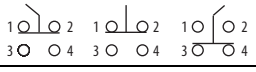					802T-AL1W5
Counterclockwise	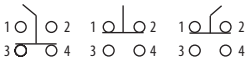					802T-AL2W5

(1) These low operating torque limit switches can only be supplied with Cat. No. 802T-W5 rod lever. The rod can easily be formed to meet special application requirements.

Approximate Dimensions

Dimensions are shown in mm (in.). Dimensions are not intended to be used for installation purposes.

IMPORTANT For operating head and lever assembly dimensions that are not shown, see Approximate Dimensions on page 132. Conduit pipe opening 1/2 in. NPT.

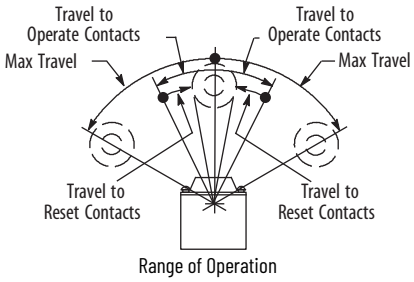

802T-A

802T-ALWS

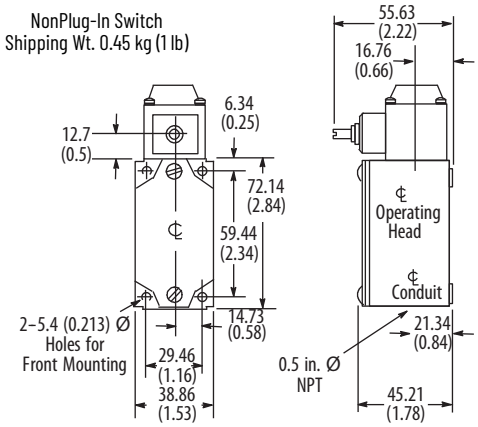

Two-circuit Lever Type – Maintained Contact and Neutral Position

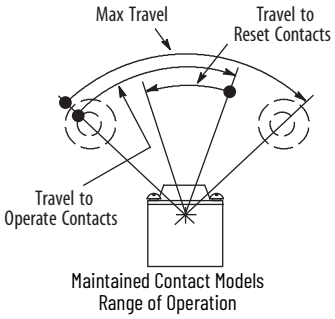

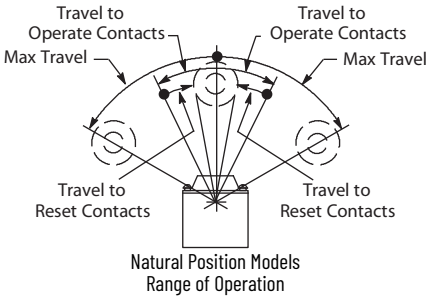

802T-AM

802T-NP

Product Selection

Contact Type	Lever Movement vs. Contact Operation	Torque/Force to Operate, Max	Travel to Operate Contacts, Max	Max Travel	Travel to Reset Contacts, Max	Cat. No.
Maintained	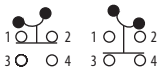	0.25 N•m (2.25 lb•in)	70° (1)	84° (1)	50°	802T-AM
Neutral position			12°	53°	6°	802T-NP

(1) From one maintained position to the other.

Approximate Dimensions

Dimensions are shown in mm (in.). Dimensions are not intended to be used for installation purposes.

IMPORTANT For operating head and lever assembly dimensions that are not shown, see Approximate Dimensions on page 132. Conduit pipe opening 1/2 in. NPT.

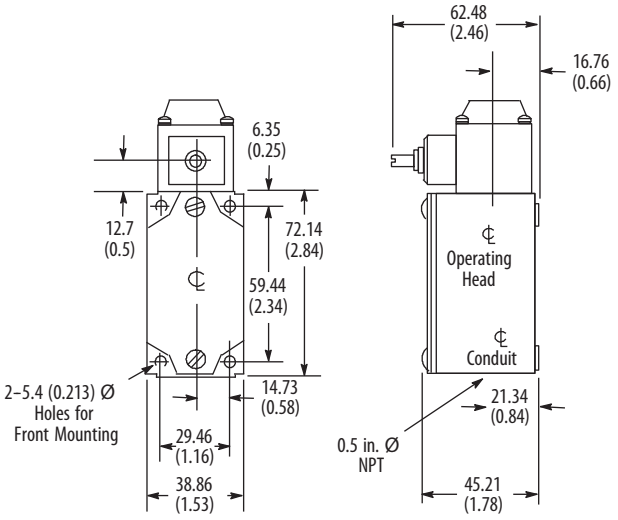

Cat. No. 802T-AM
Shipping Wt. 0.45 kg (1 lb)

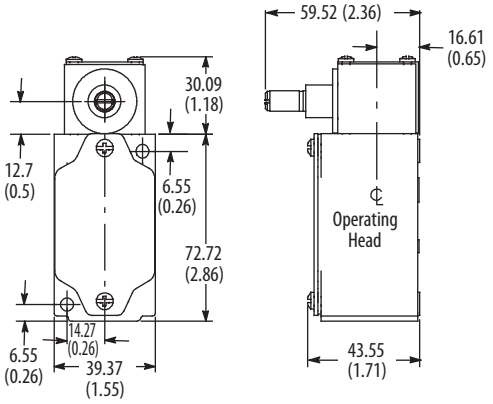

Cat. No. 802T-NP
Shipping Wt. 0.45 kg (1 lb)

One-circuit Lever Type with Time Delay – Spring Return

The Bulletin 802T time delay NEMA Type 13 oiltight limit switch includes a pneumatic timing function. The time delay is adjustable from 0.5...15 s ±25%. Two types are available:

- On-Delay: The time delay takes place after the lever is actuated.
- Off-Delay: The time delay takes place after the actuated lever has returned to the normal position.

A typical application is a counterboring operation in which the cutting tool must dwell for a short time after the feed advance has reached a pre-determined stop. An on-delay limit switch (Cat. No. 802T-R3TD) adjusted to the desired time would provide the time delay before the cutting tool in stopped.

802T-R1TD with 802T-W1 Lever

Product Selection

Lever Movement vs. Contact Operation (1)		Torque/Force to Operate, Max	Travel to Operate Contacts, Max	Over Travel	Max Travel	Cat. No.	
						On-Delay (2)(3)(4)	Off-Delay (5)
Clockwise, lever cannot move counterclockwise	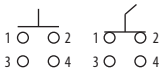	0.23 N•m (2 lb•in)	45° (6)	45° (6)	Approx. 90°	802T-R1TD	802T-R7TD
	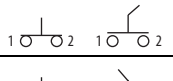					802T-R3TD	802T-R5TD
Counterclockwise, lever cannot move clockwise	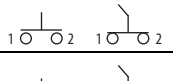					802T-R2TD	802T-R8TD
						802T-R4TD	802T-R6TD

(1) Contacts are rated for 3 A, 120V AC maximum.
(2) The time delay is adjustable from 0.5...15 seconds ±25%.
(3) The lever travel must be faster than the timing setting.
(4) Time delay occurs after the lever is moved to operated position.
(5) Time delay occurs after the lever is moved from operated to normal position.
(6) Required timing accuracy.

Approximate Dimensions

Dimensions are shown in mm (in.). Dimensions are not intended to be used for installation purposes.

IMPORTANT For operating head and lever assembly dimensions that are not shown, see Approximate Dimensions on page 132. Conduit pipe opening 1/2 in. NPT.

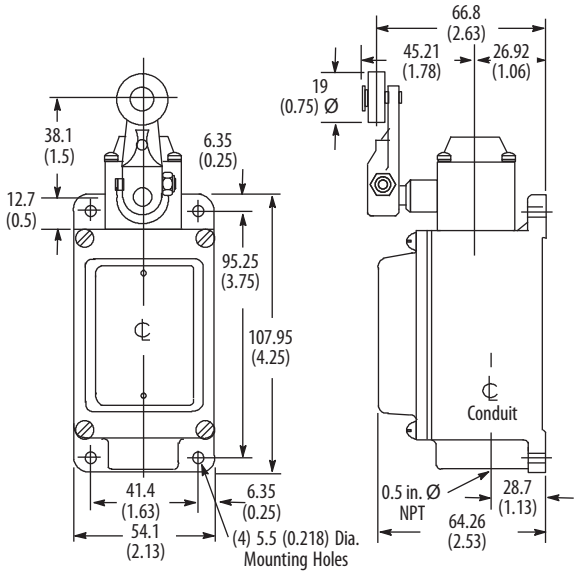

Time Delay Switch with Cat. No. 802T-W1 Lever
Shipping Wt. 0.90 kg (2 lb)

Two-circuit Push Type — Spring Return and Maintained Contact

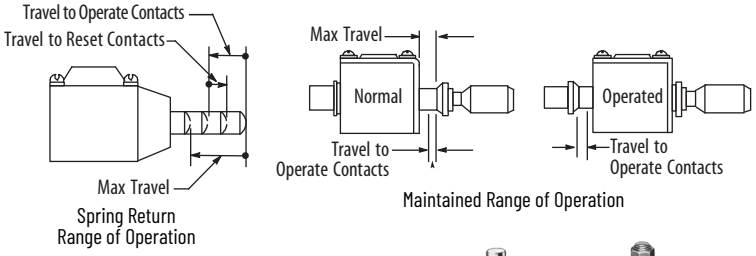

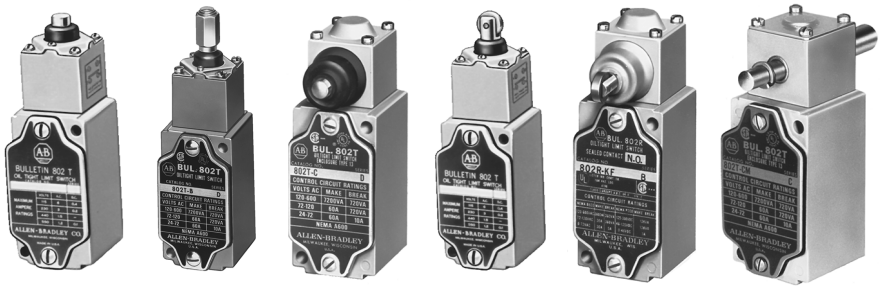

Top Push Rod | Adjustable Top Push Rod | Side Push Rod | Top Push Roller | Side Push Roller | Side Push Rod Maintained

Product Selection

Operator Type	Contact Operation		Torque/Force to Operate, Max	Travel to Operate Contacts, Max	Max Travel	Travel to Reset Contacts, Max	Cat. No.
	Normal	Operated					
Top push rod	1 2 3 4	1 2 3 4	15.6 N (3.5 lb)	1.9 mm (0.075 in.)	5.1 mm (0.202 in.)	0.8 mm (0.030 in.)	802T-B
Adjustable top push rod							802T-BA
Top push roller							802T-D
Side push rod	1 2 3 4	1 2 3 4	20.0 N (4.5 lb)	3.2 mm (0.125 in.)	5.5 mm (0.218 in.)	1.5 mm (0.057 in.)	802T-C
Side push vertical roller							802T-K
Side push horizontal roller							802T-K1
Maintained contact side push rod			35.6 N (8 lb)	4.87 mm (0.192 in.) Nominal	5.96 mm (0.235 in.)	5.30 mm (0.209 in.) Nominal	802T-CM

Approximate Dimensions

Dimensions are shown in mm (in.). Dimensions are not intended to be used for installation purposes.

IMPORTANT For operating head and lever assembly dimensions that are not shown, see Approximate Dimensions on page 132. Conduit pipe opening 1/2 in. NPT.

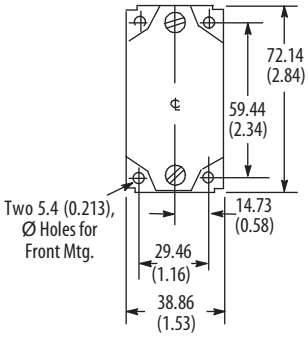

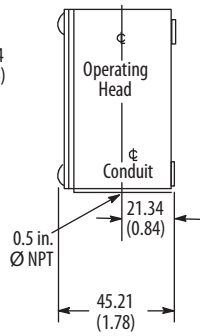

Non Plug-in Switch
Shipping Wt. 0.45 kg (1 lb)

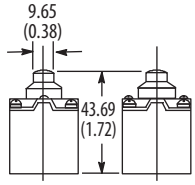

802T-B Top Push Rod Head
Shipping Wt. 0.128 kg (4.5 oz)

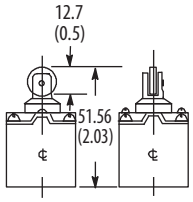

802T-BA Adjustable Top Push Rod Head
Shipping Wt. 0.128 kg (4.5 oz)

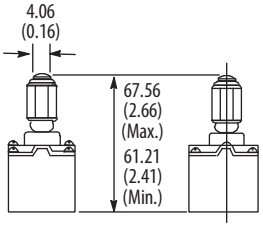

802T-D Top Push Roller Head
Shipping Wt. 0.128 kg (4.5 oz)

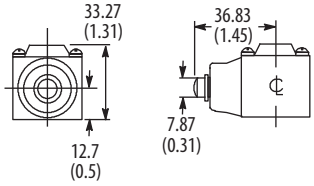

802T-C Side Push Rod Head
Shipping Wt. 0.128 kg (4.5 oz)

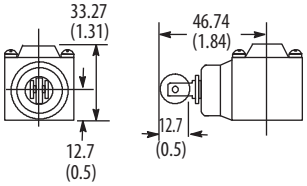

802T-K Side Push Roller Head
Shipping Wt. 0.128 kg (4.5 oz)

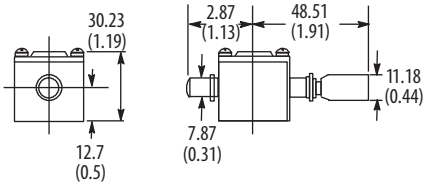

802T-CM Maintained Side Push Rod Head
Shipping Wt. 4.5 oz (0.128 kg)

Two-circuit Wobble Stick and Cat Whisker – Spring Return

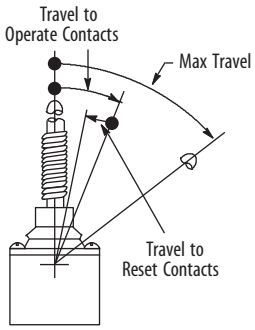

Range of Operation

Wobble Stick Nylon Extension

Wobble Stick Wire Extension

Wobble Stick Wire Extension

Product Selection

Operator Type	Lever Movement vs. Contact Operation		Torque/Force to Operate, Max (1)	Travel to Operate Contacts, Max (1)	Max Travel (1)	Travel to Reset Contacts, Max (1)	Cat. No.
	Normal	Operated					
Nylon wobble stick	1 ○ ○ 2 3 ○ ○ 4	1 ○ ○ 2 3 ○ ○ 4	0.51 N•m (4.5 lb•in)	9°	10°	4°	802T-WS
Wire wobble stick							802T-WS1
Wire cat whisker			0.06 N•m (8 oz•in)	21°	22°	14°	802T-CW

(1) Operating travels and torque are measured at the rigid section of the stick or cat whisker.

Approximate Dimensions

Dimensions are shown in mm (in.). Dimensions are not intended to be used for installation purposes.

IMPORTANT For operating head and lever assembly dimensions that are not shown, see Approximate Dimensions on page 132. Conduit pipe opening 1/2 in. NPT.

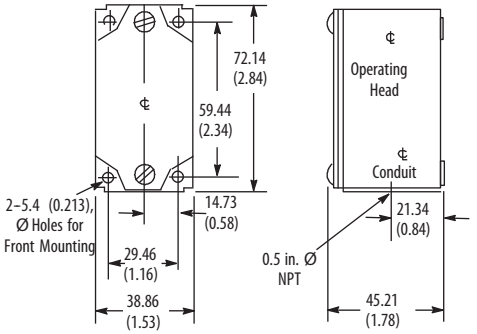

NonPlug-in Switch
Shipping Wt. 0.45 kg (1 lb)

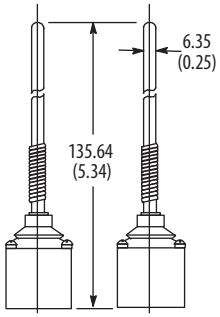

Z-18210 Nylon Wobble Stick Head
Shipping Wt. 0.128 kg (4.5 oz)

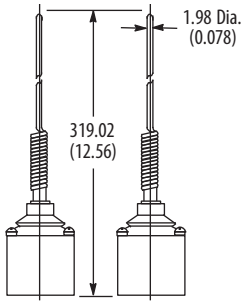

Z-18211 Wire Wobble Stick Head
Shipping Wt. 0.149 kg (5.25 oz)

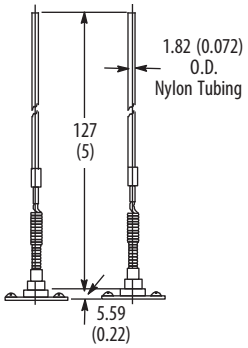

Z-25142 Cat Whisker Head
Shipping Wt. 0.028 kg (1 oz)

Vertical Four-circuit Push Type — Spring Return and Maintained Contact

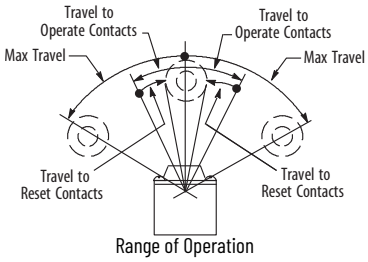

Range of Operation

Switch Without Lever

Product Selection

Lever Movement vs. Contact Operation		Torque/Force to Operate, Max	Travel to Operate Contacts, Max	Max Travel	Travel to Reset Contacts, Max	Cat. No.
Clockwise or counterclockwise	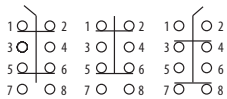	0.34 N•m (3 lb•in)	18°	42°	14°	802T-AT
		0.68 N•m (6 lb•in)	9°	50°	6°	802T-HT
Clockwise	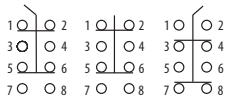	0.40 N•m (3.5 lb•in)	18°	42°	14°	802T-A1T
		0.68 N•m (6 lb•in)	9°	50°	6°	802T-H1T
Counterclockwise	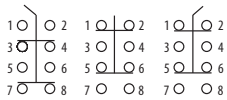	0.40 N•m (3.5 lb•in)	18°	42°	14°	802T-A2T
		0.68 N•m (6 lb•in)	9°	50°	6°	802T-H2T
Clockwise, lever cannot move counterclockwise	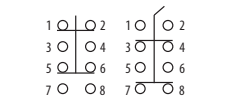	0.45 N•m (4 lb•in)	28°	91°	18°	802T-L1T
Counterclockwise, lever cannot move clockwise	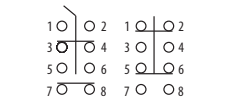					802T-L2T
Maintained contact clockwise or counterclockwise	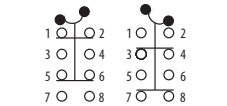	0.34 N•m (3 lb•in)	75°	84° (1)	50°	802T-AMT

(1) From one maintained position to the other.

Approximate Dimensions

Dimensions are shown in mm (in.). Dimensions are not intended to be used for installation purposes.

IMPORTANT For operating head and lever assembly dimensions that are not shown, see Approximate Dimensions on page 132. Conduit pipe opening 1/2 in. NPT.

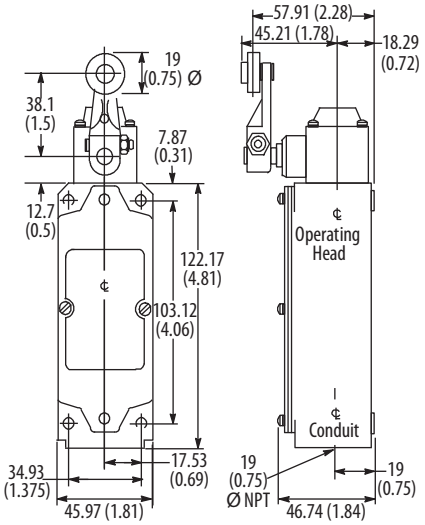

4-Circuit NonPlug-in Switch with 802T-W1 Lever
Shipping Wt. 0.57 kg (1.25 lb)

Vertical Four-circuit Push Type — Spring Return and Maintained Contact

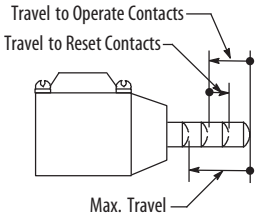

Spring Return Range of Operation

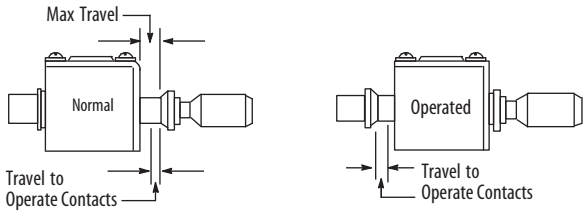

Maintained Range of Operation

Top Rod

Adjustable Top Push Rod

Side Rod

Top Roller

Side Roller

Side Rod Maintained

Product Selection

Operator Type	Contact Operation		Torque/Force to Operate, Max	Travel to Operate Contacts, Max	Max Travel	Travel to Reset Contacts, Max	Cat. No. [1]
	Normal	Operated					
Top Push Rod	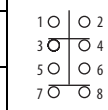	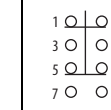	24.4 N (5.5 lb)	3.6 mm (0.140 in.)	6.0 mm (0.234 in.)	1.6 mm (0.062 in.)	802T-BT
Adjustable Top Push Rod							802T-BAT
Side Push Rod			28.9 N (6.5 lb)			2.4 mm (0.094 in.)	802T-CT
Top Push Roller	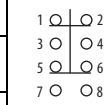	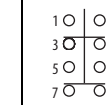	24.4 N (5.5 lb)			1.6 mm (0.062 in.)	802T-DT
Side Push Vertical Roller			28.9 N (6.5 lb)			2.4 mm (0.094 in.)	802T-KT
Side Push Horizontal Roller							802T-K1T
Maintained Contact Side Push Rod			62.2 N (14 lb)	3.93 mm (0.155 in.) Nominal	5.96 mm (0.235 in.)	5.30 mm (0.180 in.) Nominal	802T-CMT

(1) These devices are not available with fluorinated elastomer seals or neon status indicators.

Approximate Dimensions

Dimensions are shown in mm (in.). Dimensions are not intended to be used for installation purposes.

IMPORTANT For operating head and lever assembly dimensions that are not shown, see Approximate Dimensions on page 132. Conduit pipe opening 1/2 in. NPT.

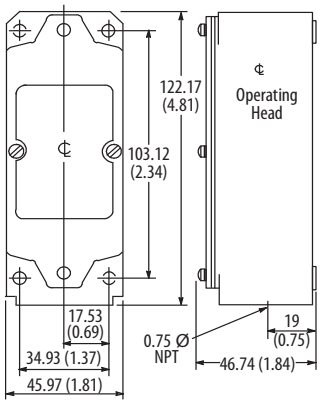

NonPlug-in Switch
Shipping Wt. 0.57 kg (1.25 lb)

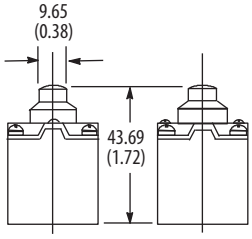

Cat. No. 802T-BT
Top Push Rod Head
Shipping Wt. 0.128 kg (4.5 oz)

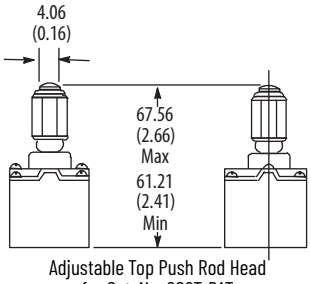

Adjustable Top Push Rod Head
for Cat. No. 802T-BAT
Shipping Wt. 0.128 kg (4.5 oz)[a]

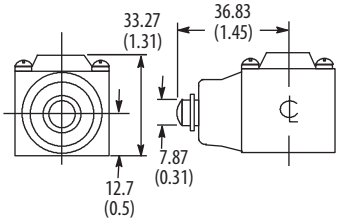

Cat. No. 802T-CT
Side Push Rod Head
Shipping Wt. 0.128 kg (4.5 oz)

(a) Not sold separately.

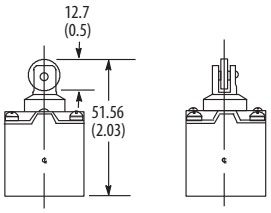

Cat. No. 802T-DT
Top Push Roller Head
Shipping Wt. 0.128 kg (4.5 oz)

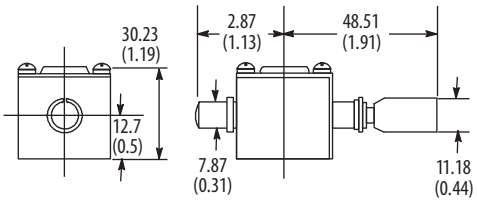

Cat. Nos. 802T-KT & 802T-K1T
Side Push Roller Head
Shipping Wt. 0.128 kg (4.5 oz)

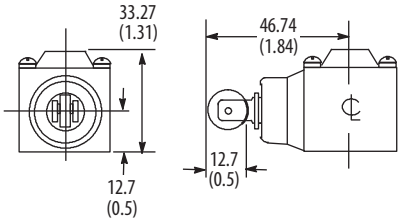

Cat. No. 802T-CMT
Maintained Side Push Rod Head
Shipping Wt. 0.128 kg (4.5 oz)

Vertical Four-circuit Wobble Stick and Cat Whisker – Spring Return

IMPORTANT Mount these switches in a way that the wobble stick or cat whisker cannot be deflected beyond the maximum travel position to avoid excessive backlash, which could case undesirable repetition of contact action.

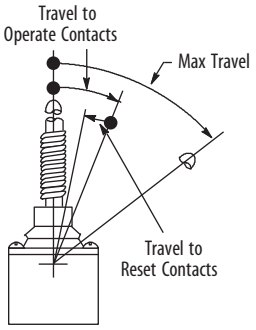

Range of Operation

Wobble Stick

Cat Whisker

Product Selection

Operator Type	Contact Operation	Torque/Force to Operate, Max	Travel to Operate Contacts, Max (1)	Max Travel (1)	Travel to Reset Contacts, Max (1)	Cat. No.
	Normal					
Nylon wobble stick	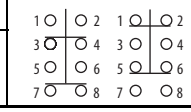	0.79 N•m (7 lb•in)	12°	12°	9°	802T-WST
Wire cat whisker						802T-WS1T

(1) Travels are measured at the rigid section of the stick or cat whisker.

Approximate Dimensions

Dimensions are shown in mm (in.). Dimensions are not intended to be used for installation purposes.

IMPORTANT For operating head and lever assembly dimensions that are not shown, see Approximate Dimensions on page 132. Conduit pipe opening 1/2 in. NPT.

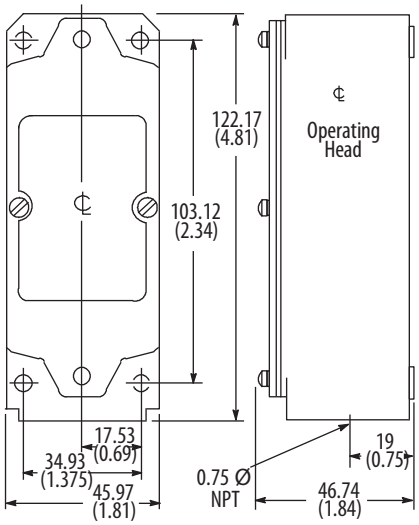

NonPlug-in Switch
Shipping Wt. 0.45 kg (1 lb)

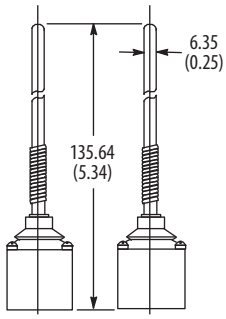

Z-18210 Nylon Wobble Stick Head
Shipping Wt. 0.128 kg (4.5 oz)

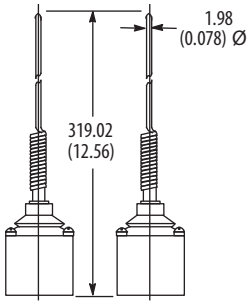

Z-18211 Wire Wobble Stick Head
Shipping Wt. 0.149 kg (5.25 oz)

Horizontal Four-circuit Lever Type — Spring Return

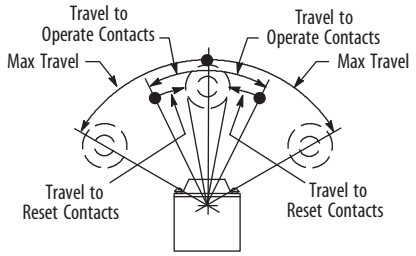

Lever Operation When Standard Levers Are Used

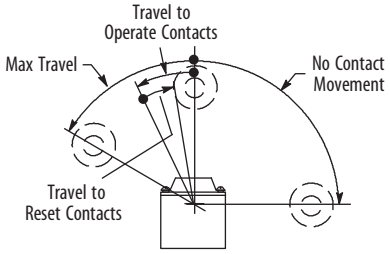

Lever Operation When 802T-W7 and -W8
One-way Levers Are Used

Switch without Lever

Product Selection

Lever Movement vs. Contact Operation		Torque/Force to Operate, Max	Travel to Operate Contacts, Max	Max Travel	Travel to Reset Contacts, Max	Cat. No.
Clockwise or Counterclockwise	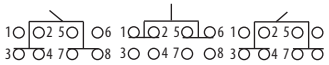	0.34 N•m (3 lb•in)	14°	42°	8°	802T-ATH
		0.68 N•m (6 lb•in)	6°	50°	3°	802T-HTH
Clockwise	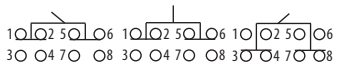	0.39 N•m (3.5 lb•in)	14°	42°	8°	802T-A1TH
		0.68 N•m (6 lb•in)	6°	50°	3°	802T-H1TH
Counterclockwise	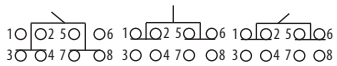	0.39 N•m (3.5 lb•in)	14°	42°	8°	802T-A2TH
		0.68 N•m (6 lb•in)	6°	50°	3°	802T-H2TH
Clockwise Lever cannot move counterclockwise	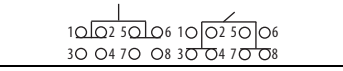	0.45 N•m (4 lb•in)	20°	91°	11°	802T-L1TH
Counterclockwise Lever cannot move clockwise	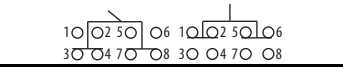					802T-L2TH

Approximate Dimensions

Dimensions are shown in mm (in.). Dimensions are not intended to be used for installation purposes.

IMPORTANT For operating head and lever assembly dimensions that are not shown, see Approximate Dimensions on page 132. Conduit pipe opening 1/2 in. NPT.

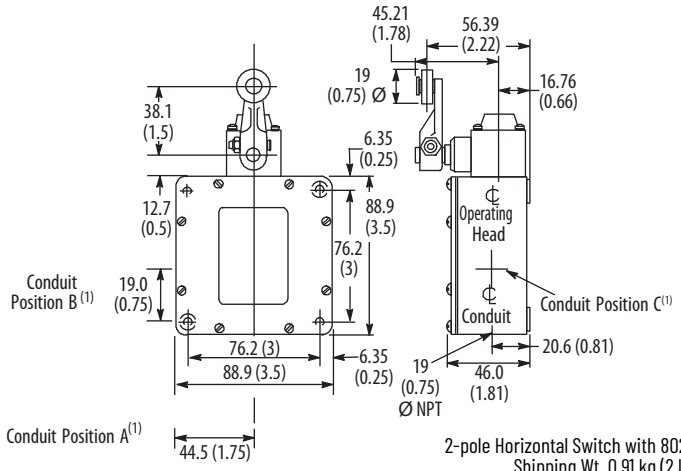

2-pole Horizontal Switch with 802T-W1 Lever
Shipping Wt. 0.91 kg (2 lb)

(1) Conduit positions for modifications S1, S2, S3

Horizontal Four-circuit Lever Type — Maintained Contact

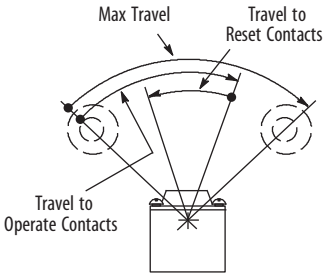

Range of Operation

Switch without Lever

Product Selection

Lever Movement vs. Contact Operation		Torque/Force to Operate, Max	Travel to Operate Contacts, Max	Max Travel	Travel to Reset Contacts, Max	Cat. No.
Clockwise or counterclockwise	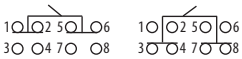	0.34 N•m (3 lb•in)	70°	84°, from one maintained position to the other	35°	802T-AMTH

Approximate Dimensions

Dimensions are shown in mm (in.). Dimensions are not intended to be used for installation purposes.

IMPORTANT For operating head and lever assembly dimensions that are not shown, see Approximate Dimensions on page 132. Conduit pipe opening 1/2 in. NPT.

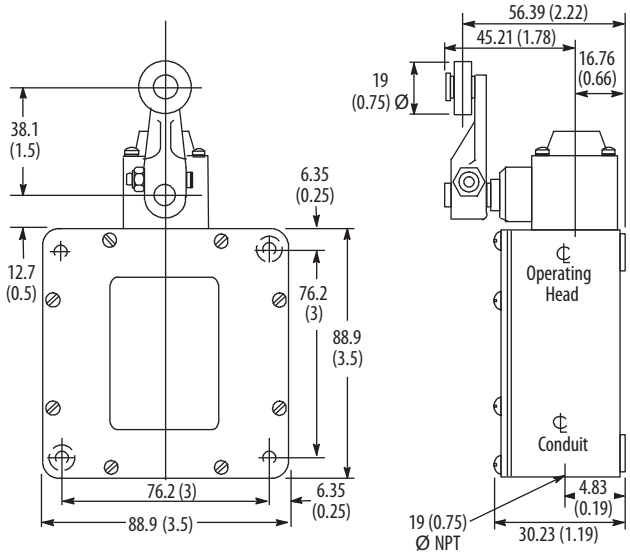

2-pole Horizontal Switch with 802T-W1 Lever
Shipping Wt. 0.91 kg (2 lb)

Horizontal Four-circuit Push Type — Spring Return and Maintained Contact

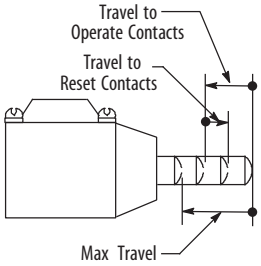

Spring Return Range of Operation

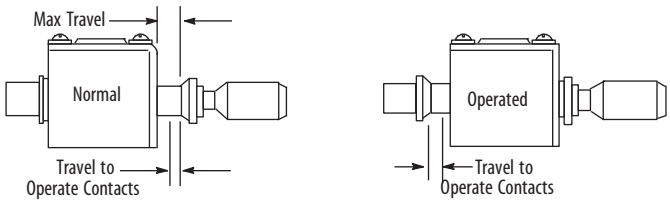

Maintained Range of Operation

Top Push Rod

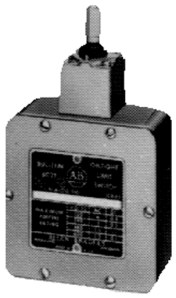

Adjustable Top Push Rod

Side Push Rod

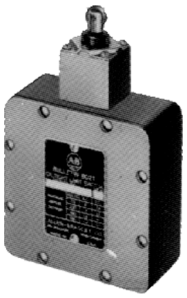

Top Push Roller

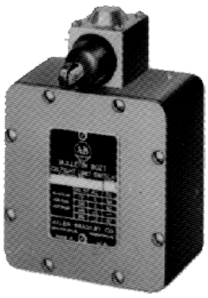

Side Push Roller

Side Push Rod
Maintained Contact

Product Selection

Operator Type	Contact Operation		Torque/Force to Operate, Max	Travel to Operate Contacts, Max	Max Travel	Travel to Reset Contacts, Max	Cat. No.
	Normal	Operated					
Top push rod	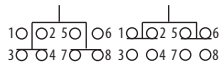		24.4 N (5.5 lb)	2.4 mm (0.09 in.)	5.9 mm (0.24 in.)	1.2 mm (0.046 in.)	802T-BTH
Adjustable top push rod							802T-BATH
Top push roller							802T-DTH
Side push rod	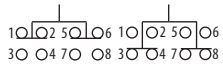		24.4 N (5.5 lb)	2.8 mm (0.11 in.)	5.9 mm (0.23 in.)	1.6 mm (0.062 in.)	802T-CTH
Side push vertical roller							802T-KTH
Side push horizontal roller							802T-K1TH
Maintained contact side push rod			62.2 N (14 lb)	4.87 mm (0.19 in.) Nominal	5.96 mm (0.23 in.)	5.30 mm (0.21 in.) Nominal	802T-CMTH

Approximate Dimensions

Dimensions are shown in mm (in.). Dimensions are not intended to be used for installation purposes.

IMPORTANT For operating head and lever assembly dimensions that are not shown, see Approximate Dimensions on page 132. Conduit pipe opening 1/2 in. NPT.

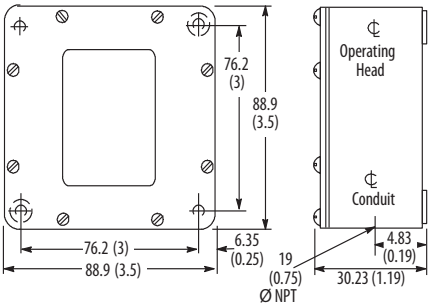

2-Pole Horizontal Switch Base
Shipping Wt. 0.91 kg (2 lb)

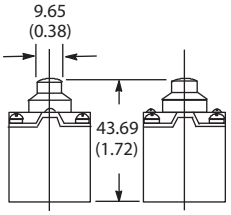

Z-19243
Top Push Rod Head
Shipping Wt. 0.128 kg (4.5 oz)

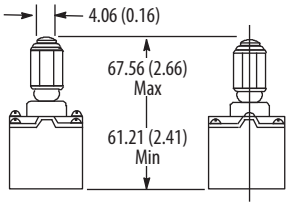

Adjustable Top Push Rod Head for 802T-KTH
Shipping Wt. 0.128 kg (4.5 oz) [a]

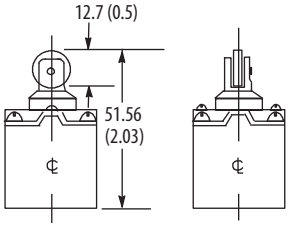

Z-19241
Top Push Roller Head
Shipping Wt. 0.128 kg (4.5 oz)

(a) Not sold separately.

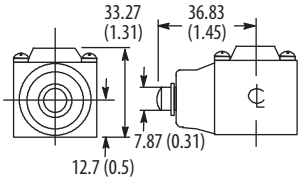

Z-21168
Maintained Side Push Rod Head
Shipping Wt. 0.128 kg (4.5 oz)

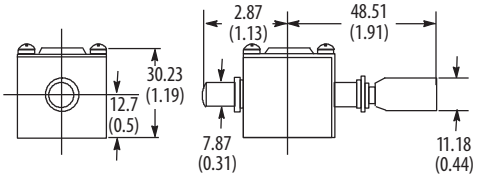

Z-21165
Side Push Rod Head
Shipping Wt. 0.128 kg (4.5 oz)

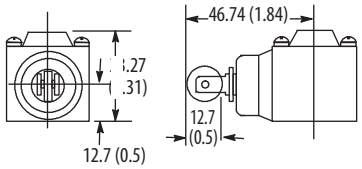

Z-21166
Side Push Roller Head
Shipping Wt. 0.128 kg (4.5 oz)

Horizontal Four-circuit Wobble Stick and Cat Whisker — Spring Return

IMPORTANT Mount these switches in a way that the wobble stick or cat whisker cannot be deflected beyond the maximum travel position to avoid excessive backlash, which could case undesirable repetition of contact action.

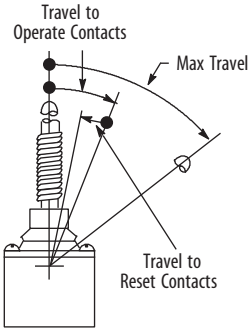

Wobble Stick

Cat Whisker

Product Selection

Operator Type	Contact Operation	Torque/Force to Operate, Max	Travel to Operate Contacts, Max	Max Travel (1)	Travel to Reset Contacts, Max (1)	Cat. No.
Nylon wobble stick	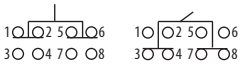	0.79 N•m (7 lb•in)	12° (1)	12°	9°	802T-WSTH
Wire cat whisker						802T-WS1TH

(1) Travels are measured at the rigid section of the stick or cat whisker.

Approximate Dimensions

Dimensions are shown in mm (in.). Dimensions are not intended to be used for installation purposes.

IMPORTANT For operating head and lever assembly dimensions that are not shown, see Approximate Dimensions on page 132. Conduit pipe opening 1/2 in. NPT.

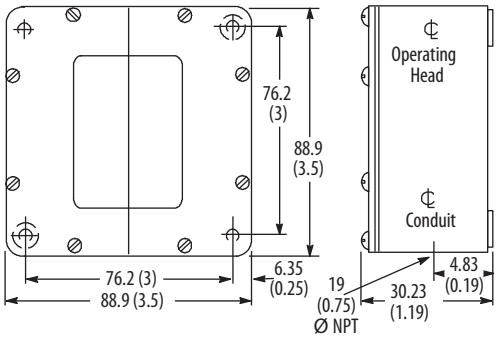

2-pole Horizontal Switch
Shipping Wt. 0.91 kg (2 lb)

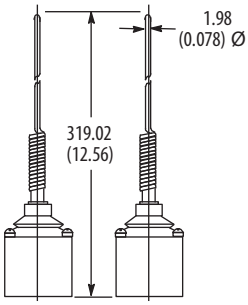

Z-32109 Wire Wobble Stick Head
Shipping Wt. 0.149 kg (5.25 oz)

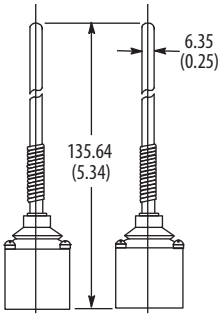

Z-29195 Nylon Wobble Stick Head
Shipping Wt. 0.128 kg (4.5 oz)

Dual Switch Lever/Push Types — Spring Return

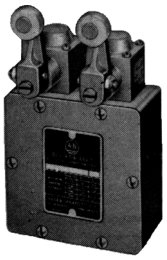

Dual Switch with 802T-W1 Levers

Product Selection

Left Hand Switch	Right Hand Switch					
	802T-A	**802T-H**	**802T-A1**	**802T-A2**	**802T-C**	**802T-D**
802T-A	802T-AD	802T-AHD	—	802T-AA2D	802T-ACD	—
802T-H	802T-HAD	802T-HD	—	—	802T-HCD	802T-HDD
802T-A1	—	—	802T-A1D	802T-A1A2D	—	—
802T-A2	—	—	802T-A2A1D	802T-A2D	—	—
802T-C	802T-CAD	—	802T-CA1D	—	802T-CD	—
802T-D	802T-DAD	—	—	—	802T-DCD	802T-DD

Approximate Dimensions

Dimensions are shown in mm (in.). Dimensions are not intended to be used for installation purposes.

IMPORTANT For operating head and lever assembly dimensions that are not shown, see Approximate Dimensions on page 132. Conduit pipe opening 1/2 in. NPT.

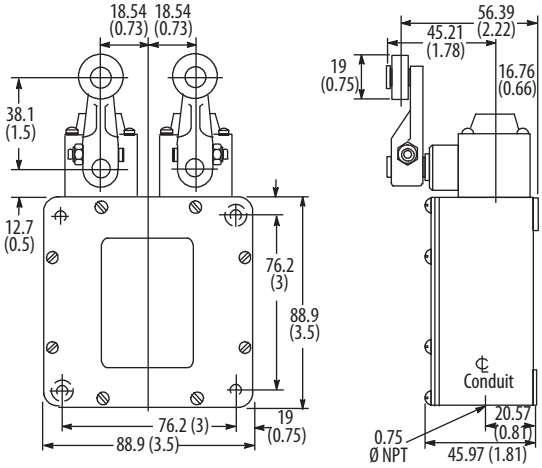

Shipping Wt. 0.91 kg (2 lb)

Air-Operated – Spring Return

Product Selection

Contact Operation [1]	Cat. No.	
	Single Unit [2]	Double Unit [3]
Operates when 25 psi (172 kPa) ±25% of air pressure is applied, and resets with a pressure drop of 6...15 psi (41...103 kPa). Maximum allowable pressure is 100 psi (680 kPa).	802T-P	802T-2P

(1) When the switch is in the reset state, a small rod protrudes from the top of the die casting. The rod is flush with the surface when the switch trips on higher pressure. The switch can be manually operated by pressing down on the rod.
(2) Contact operation is similar to two-circuit devices.
(3) Contact operation is similar to four-circuit horizontal construction devices.

Approximate Dimensions

Dimensions are shown in mm (in.). Dimensions are not intended to be used for installation purposes.

IMPORTANT For operating head and lever assembly dimensions that are not shown, see Approximate Dimensions on page 132. Conduit pipe opening 1/2 in. NPT.

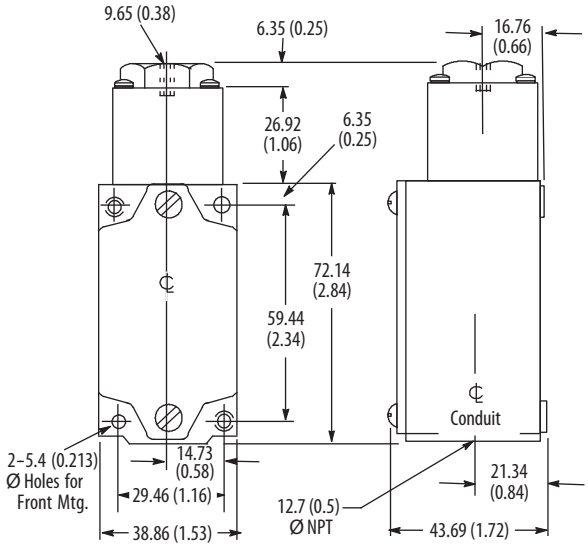

Air-Operated Switch
Shipping Wt. 0.34 kg (12 oz)

Bulletin 802T NonPlug-in Modifications and Accessories

Cavity Mounting

Front View Side View

Except for the types identified by Cat. Nos. 802T-B, 802T-D, 802T-WS, 802T-WS1, and 802T-CW, Bulletin 802T switches can be supplied in a special construction for cavity mounting in a machine base or panel. With this construction, the actuator and contact block are mounted on the back of a gasket steel plate. To order a switch for cavity mounting, add the letter O to the cat. no. of the corresponding surface-mounted switch. Example: Cat. No. 802T-A becomes Cat. No. 802T-AO.

Manifold Mounting

802T-AMU with 802T-W4A Lever

All two-circuit Bulletin 802T switches can be supplied with a special base that permits mounting the switch manifold style on a machine base, panel, or raceway. This base is equipped with a wiring hole and synthetic rubber gasket on the back.

To order a switch with a manifold mounting base, add the letter U to the cat. no. Example: Cat. No. 802T-AM becomes Cat. No. 802T-AMU.

Transparent Cover

Switches can be furnished with a gasket, transparent plastic cover. This modification enables the electrician to inspect terminal wiring without removing the switch cover. Not available on cat whisker, time delay, or cavity style mounted limit switches.

To order a switch with a transparent cover, add the letter Z to the cat. no. of the switch. For example: Cat. No. 802T-D becomes Cat. No. 802T-DZ.

Low Temperature Operation

Bulletin 802T nonplug-in limit switches are designed to operate in a temperature range of -18...+54 °C (0...130 °F). Special limit switches modified for extended temperature operation -29...+121 °C (-20...+250 °F) are available. Temperature ranges below 0 °C (32 °F) are based on the absence of freezing moisture or water.

To order a Bulletin 802T modified for extended temperature operation, insert the letter E after the operating head designation. Example: Cat. No. 802T-A becomes Cat. No. 802T-AE. (Cat. Nos. 802T-WS, WS1, CW, P, 2P, and the time delay limit switches are not available for extended temperature operation. Cat. Nos. 802T-A3 and A4 are available for extended temperature operation except with a reduction in damping.)

Special Conduit Positions

Dual operating head switches can be obtained with up to three conduit openings. The location of conduit openings A, B, and C are shown in Approximate Dimensions on page 57. The conduit opening in Position A is 3/4 in. NPT, the conduit openings in Position B and C are 1/2 inch NPT. To order a switch with special conduit positioning, add the suffix S1, S2, or S3 to the cat. no. per the following:

- S1 = Position A+B
- S2 = Position A+C
- S3 = Position B+C

Neon Status Indicator (2-circuit Models Only)

Two-circuit Bulletin 802T surface-mounted limit switches can be supplied with two neon status indicators —AC 208/240V, 50...60 Hz and 120V, 50...60 Hz. To order, add the letter N for 120V or N5 for 240V before the lever designation. Example: Cat. No. 802T-A1 with status indicators would be 802T-A1N. Not available on 4-circuit devices.

In addition, status indicator kits as shown in the following table are available for field installation on two circuit devices.

Limit Switch Construction	Status Indicator Kit Cat. No.	
	120V AC 50...60 Hz	208/240V AC 50...60 Hz
Surface mounted	802T- N1	802T- N4
Neutral position	802T- N2	802T- N10

Conduit Seal

A synthetic rubber conduit seal is available to protect the conduit opening against entry of oil and moisture. The seal can be added easily before switch installation and must be installed so that the 5/8 inch diameter projection (the other projection is 23/32 inch diameter) faces against the shoulder at the bottom of the pipe tap. The seal can accommodate up to four wires of #12 gauge or smaller. Each wire hole in the seal has a thin inner wall that is pierced when a wire is passed through. Thus, any unused opening remains sealed. The seat is designed for single contact block, surface-mounted base limit switches having 1/2 inch conduit openings.

Description	Cat. No.
Conduit seal	802T- N3

Special Conduit Locknut

This option, a "Tru-Seal" nut with threaded PTFE insert, is a valuable accessory for any Bulletin 802T that is connected with conduit.

Description	Cat. No.
"Tru-Seal" locknut for 1/2 inch conduit	802T- X4

MIni-type Receptacles

To order a Bulletin 802T pre-wired limit switch with a 5-pin (two circuit) or 9-pin (four circuit) mini connector, add the suffix J1 or J9 depending on the desired wiring (J9 wiring not available for 4-circuit models).

5-pin Mini-Type Receptacle (1)

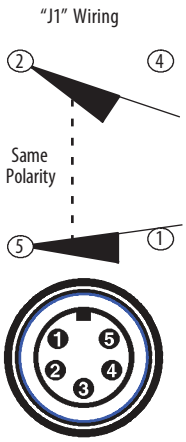

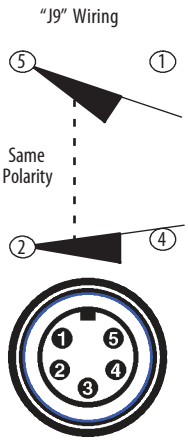

9-pin Mini-Type Receptacle (2)

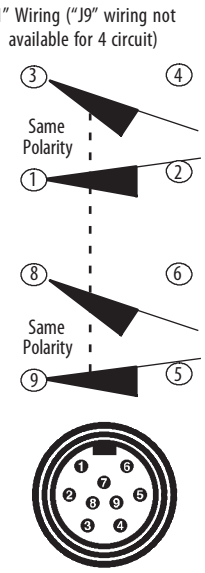

(1) An appropriate female connector with cable (Cat. No. 889N-F5AFC-6F) is available.
(2) An appropriate female connector with cable (Cat. No. 889N-F9AF-2) is available.

Notes:

802T Direct Opening Action Safety Limit Switches

ATTENTION: To ensure that the normally closed (safety) contacts open, the limit switch actuator must be displaced beyond the point of Direct Opening Action (see Specifications).

802T safety limit switches have the following features:

- Direct opening action
- Snap acting contacts
- Rugged metal construction
- Long life and reliability
- Plug-in design
- NEMA 6P/IP67 sealing
- Equal length mounting back base

Specifications

Attribute	Value				
Safety Ratings					
Standards	EN 954-1, ISO 13849-1, IEC/EN 60204-1, NFPA 79, EN 1088, ISO 14119, IEC/ EN 60947-5-1, ANSI B11.19, AS 4024.1				
Safety classification	Cat. 1 Device per EN 954-1 Dual channel limit switch suitable for Cat. 3 or 4 systems				
Functional safety data (1)	B10d = > 2 x 106 operations at minimum load				
	PFH_D = > 3 x10-7 MTTFd = > 385 years Dual channel limit switch may be suitable for Performance levels PLe or PLd (according to ISO 13849-1:2006) and for use in SIL 2 or SIL 3 systems (according to IEC 62061) depending on application characteristics				
Certifications	CE Marked for all applicable directives, cULus Listed, and TÜV for 2- and 4-circuit models				
Outputs					
Safety contacts (2)	1 N.C. snap acting or 2 N.C. snap acting				
Auxiliary contacts	1 N.O. snap acting or 2 N.O. snap acting				
Thermal current I_{th}	10 A				
Rated insulation voltage	300V AC or 600V AC				
Switching current @ voltage	—				
Utilization Category					
A600/AC-15	(Ue)	600V	500V	240V	120V
	(Ie)	1.2 A	1.4 A	3.0 A	6.0 A
N600/DC-13	(Ue)	600V	500V	250V	125V
	(Ie)	0.4 A	0.55 A	1.1 A	2.2 A
Operating Characteristics					
Actuation speed, max	200 ft/min varies with applied loading and actuation method				
Actuation speed, min	200 ft/min varies with applied loading and actuation method				
Actuation frequency, max	8000 operations per hour				
Mechanical life	20 million cycles				
Environmental					
Enclosure type rating	NEMA 4, 6P, 12, 13 and IP65/67				
Operating temperature	-18...+110 °C (0...230 °F)				
Pollution degree	3				
Physical Characteristics					
Material	• Housing: Die-cast alloy • Actuator: Various metals or plastics				

Attribute	Value
Mounting	Two #10 equal length fasteners
Vibration	Contact fragility (10...2000 Hz @ 0.06 inch peak-to-peak)
Shock	Contact fragility (25 Gn 3 pulses per axis)
Conduit Entry	1/2 in. NPT or M20
Color	Gray

(1) Usable for ISO 13849-1:2006 and IEC 62061. Data other than B10d is based on:
- Usage rate of 1op/10 mins., 24 hrs/day, 360 days/year, which represents 51,840 operations per year
- Mission time/Proof test interval of 38 years

(2) The safety contacts are described as normally closed (N.C.) for example, with the guard closed, the actuator in place (where relevant), and the machine able to be started.

Table 28 - AC Contact Rating (Max per Pole, 50 or 60 Hz)

NEMA Rating Designation	Voltage, Max	A		Cont. Carrying Current	VA	
		Make	Break		Make	Break
2 Circuits						
A600	120	60	6	10	7200	720
	240	30	3			
AC-15	480	15	1.5			
	600	12	1.2			
4 Circuits						
A300	120	60	6	10	7200	720
	240	30	3			

Table 29 - DC Contact Rating (Max per Pole)

NEMA Rating Designation	Max Voltage	A		Cont. Carrying Current	VA	
		Make	Break		Make	Break
Q300 DC 13	250	0.27	0.27	2.5	69	69
	125	0.55	0.55			
Low Voltage DC						
24V DC @ 1.1 Amps resistive load						

Product Selection

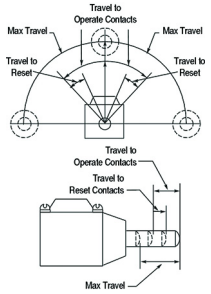

Range of Operation

Lever Type Spring Return

Push Type Roller Spring Return

Side Push Verticle Roller Spring Return

Side Push Horizontal Roller Spring Return

Number of Circuits	Lever Movement Description		Typical Force/Torque to Operate, Max	Travel to Operate Contacts, Max	Torque/Force to Operate Direct Opening Action, Min	Travel to Operate Direct Opening Action, Min	Max Travel	Travel to Reset Contacts, Max	Cat. No.
Lever Type • Spring Return									
2	Clockwise or Counter Clockwise	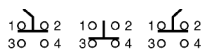	0.45 N•m (4.0 lb•in)	13	0.90 N•m (8 lb•in)	25°	90°	7°	802T-APD (1)
4		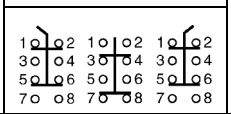							802T-ATPD (1)
Top Push Roller • Spring Return									
2	Normal	Operated	28.47 N•m (6.4 lb•in)	1.17 (0.046)	66.72 N (15.0 lb)	2.29 (0.090)	5.99 (0.236)	0.64 (0.025)	802T-DPD (2)
4									802T-DTPD (2)
Side Push Vertical Roller • Spring Return									
2	Normal	Operated	24.5 N•m (5.5 lb•in)	2.08 (0.082	53.4 N (12.0 lb)	4.19 (0.165)	5.74 (0.226)	1.14 (0.045)	802T-KPD (2)
4									802T-KTPD (2)
Side Push Horizontal Roller • Spring Return									
2	Normal	Operated	24.5 N•m (5.5 lb•in)	2.08 (0.082)	53.4 N (12.0 lb)	4.19 (0.165)	5.74 (0.226)	1.14 (0.045)	802T-K1PD (2)
4									802T-K1TPD (2)

(1) Switch without lever.
(2) Complete switch.

Typical Example of a Dual Channel Safety Application

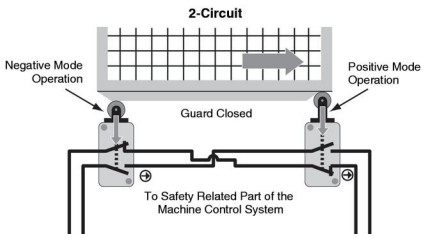

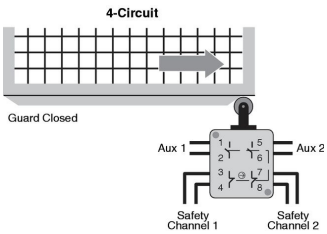

Approximate Dimensions

Dimensions are shown in mm (in.). Dimensions are not intended to be used for installation purposes.

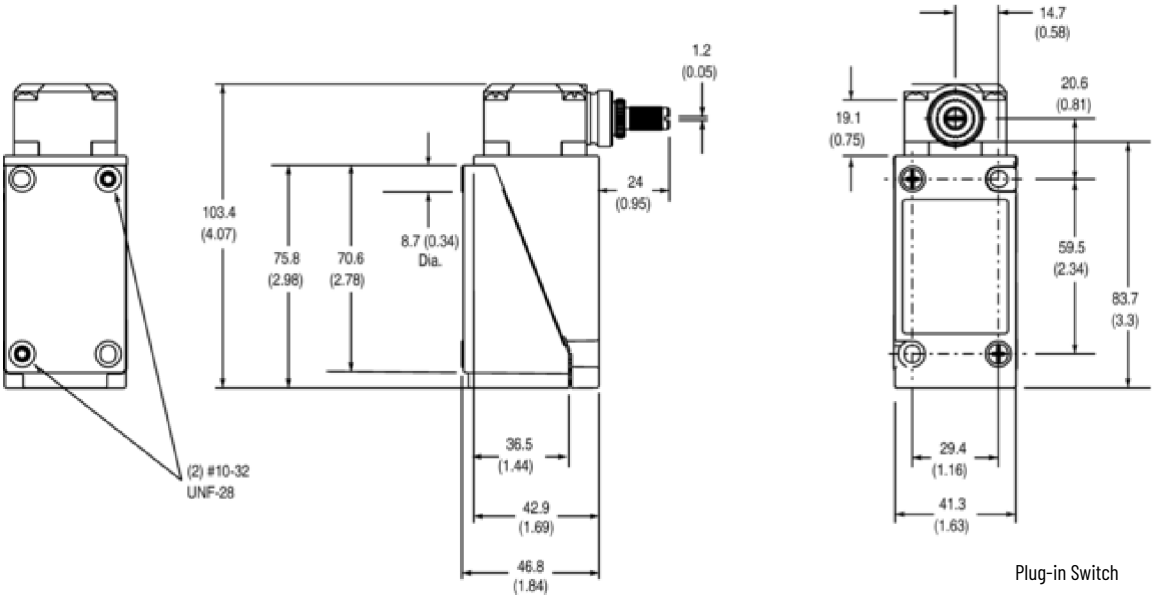

Plug-in Switch

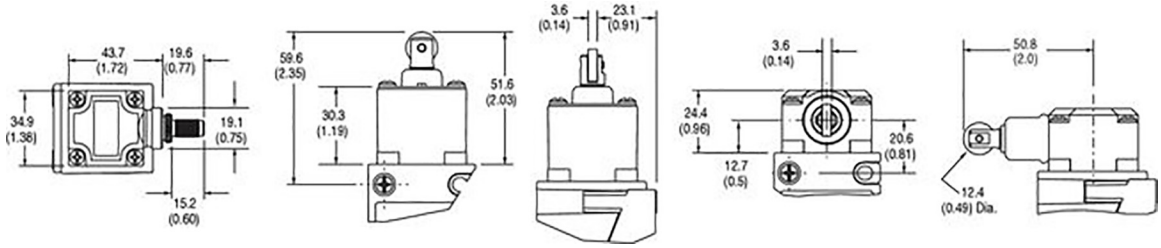

Lever Type Head

Top Push Roller Head

Side Push Roller Head

802T Safety Limit Switch Modifications

Metric Conduit Entry

To order a limit switch with a 20 mm (0.79 in.) conduit entry, add the suffix S6 to the cat. no. Example: 802T-APDS6.

Prewired Cable

To order a factory-installed, prewired type STOOW-A cable (5-conductor), add the suffix **Y** plus the number of feet required. The standard cable length is 1.52 m (5 ft). Extended cable lengths are available in multiples of 1.22 m (4 ft) only.

Example: To order a limit switch with a factory-installed 1.52 m (5 ft) cable, the cat. no. would become 802T-APDY5. To order a limit switch with a factory-installed 2.44 m (8 ft) cable, the cat. no. would become 802T-APDY8.

Mini-Style Quick-Disconnect

To order an 802T pre-wired limit switch with a 5-pin (two circuit) or 9-pin (four circuit) mini connector, add the suffix J1 or J9 depending on the desired wiring (J9 wiring not available for 4-circuit models) to the cat. no. Example: 802T-APDJ1.

5-pin Mini-type Receptacle (Two circuit)

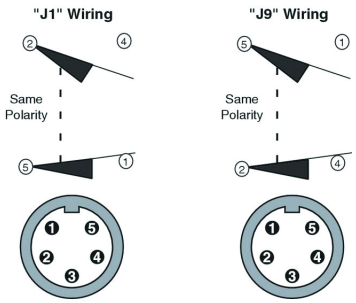

9-pin Mini-type Receptacle (Four circuit)

"J1" Wiring ("J9" wiring not available for 4 circuit)

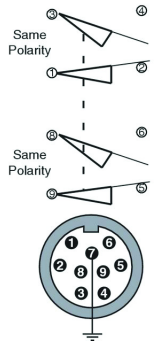

Micro quick-disconnects are available with a 5-pin 2-keyway AC or 5-pin single keyway DC. To order a limit switch with an AC micro quick-disconnect, add the suffix R5 to the cat. no. To order a limit switch with a DC micro quick-disconnect, add the suffix D5 to the cat. no. Example: 802T-APDR5 and 802T-APDD5.

Micro-style Quick-disconnect

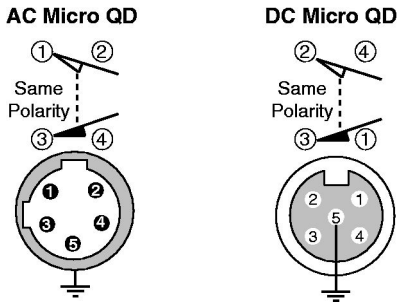

Table 30 - Levers

Type	Roller			Cat. No.
	Material	Diameter [mm (in.)]	Width [mm (in.)]	
Non-adjustable cast lever 1.5 in. radius roller on front	Nylon	19 (0.75)	7.11 (0.28)	802T-W1
	Nylon	19 (0.75)	25.4 (1.0)	802T-W1H
	Steel	19 (0.75)	6.35 (0.25)	802T-W1A
	Ball bearing	19 (0.75)	5.84 (0.23)	802T-W1B

802X Watertight or Hazardous Location Limit Switches

802X limit switches are available with multiple operator styles:

- Side rotary
- Wobble stick
- Cat whisker
- Adjustable top push
- Top or side push with or without rollers

Specifications

Attribute	Value
Certifications	UL Listed and CSA Certified
Enclosure type rating	NEMA 7 and 9/Class I, Groups B, C, and D or Class II, Groups E, F, and G or Class III; NEMA 4/nonhazardous locations
Ambient temperature (1)	• Push type with spring return and all lever types except neutral position: -46...+121 °C (-50...+250 °F) • Wobble stick and cat whisker devices: -29...+54 °C (-20...+130 °F) • Side push maintained: -46...+121 °C (-50...+250 °F) • Neutral position: -18...+121 °C (0...250 °F)

(1) Temperature ranges below 0 °C (32 °F) are based on the absence of freezing moisture or water.

Table 31 - AC Contact Rating (Max per Pole, 50 or 60 Hz, Same Polarity)

NEMA Rating Designation	Max Voltage	A		Continuous Carrying Current	VA	
		Make	Break		Make	Break
A600	120	60	6	10	7200	720
	240	30	3			
	480	15	1.5			
	600	12	1.2			

Table 32 - DC Contact Rating (Max per Pole)

NEMA Rating Designation	Max Voltage	A		Continuous Carrying Current [A]	VA	
		Make	Break		Make	Break
P150	125	1.1		5	138	

Lever Type – Spring Return

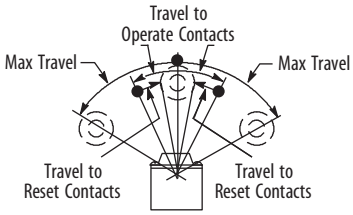

Lever Operation Except When Levers 802T-W7 and W8 Are Used Range of Operation

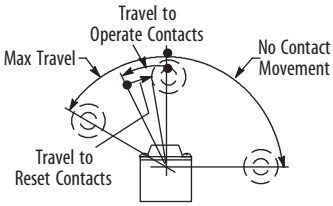

Lever Operation When Levers 802T-W7 and W8 One-way Levers Are Used Range of Operation

Switch without Lever

Product Selection

Table 33 - Standard and Neutral Position Models

Lever Movement vs. Contact Operation		Torque/Force to Operate, Max	Travel to Operate Contacts, Max	Max Travel	Travel to Reset Contacts, Max	Cat. No.	
						NEMA 4	NEMA 7 & 9
Clockwise or counterclockwise	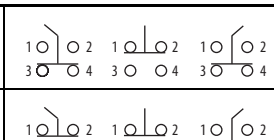	0.34 N•m (3 lb•in)	16.5°	43°	8°	802X-A4	802X-A7
		0.51 N•m (4.5 lb•in)	6°	50°	3°	–	802X-H7
Clockwise	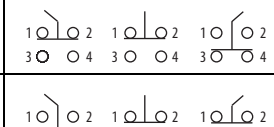	0.34 N•m (3.5 lb•in)	16.5°	43°	8°	802X-A14	802X-A17
		0.51 N•m (4.5 lb•in)	6°	50°	3°	–	802X-H17
Counterclockwise	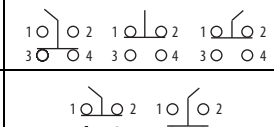	0.34 N•m (3.5 lb•in)	16.5°	43°	8°	802X-A24	802X-A27
		0.51 N•m (4.5 lb•in)	6°	50°	3°	–	802X-H27
Clockwise	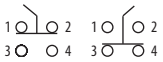	0.45 N•m (4 lb•in)	20°	91°	11°	802X-L14	802X-L17
Counterclockwise	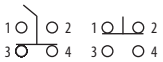	0.45 N•m (4 lb•in)	20°	91°	11°	802X-L24	802X-L27
Neutral position switch with N.O. contacts	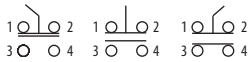	0.25 N•m (2.25 lb•in)	12°	53°	6°	–	802X-NP7

Approximate Dimensions

Dimensions are shown in mm (in.). Dimensions are not intended to be used for installation purposes.

IMPORTANT For operating head and lever assembly dimensions that are not shown, see Approximate Dimensions on page 132. Conduit pipe opening 1/2 in. NPT.

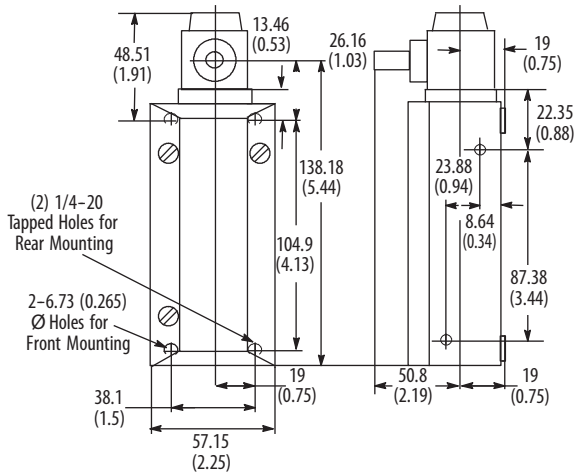

Approximate Shipping Wt.
0.9 kg (2 lb)

Mounting Hole Dimensions
Two 6.7 (0.265) Ø through hole with 12.7 (0.50) Ø c'bore 6.35 (0.25) deep for front mounting.
Two 6.35 (0.25)-20 tapped holes 14.2 (0.56) deep for rear mounting.
Two 6.35 (0.25)-20 tapped holes 12.4 (0.5) deep for side mounting.

Lever Type – Maintained Contact

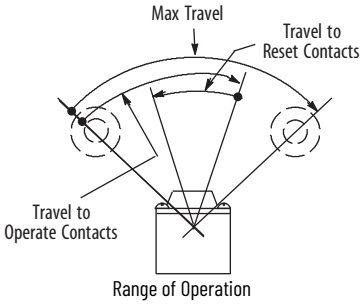

Switch without Lever

Product Selection

Lever Movement vs. Contact Operation		Torque/Force to Operate, Max	Travel to Operate Contacts, Max	Max Travel	Travel to Reset Contacts, Max	Cat. No.	
						NEMA 4	NEMA 7 & 9
Clockwise or counterclockwise	1 2 3 4 / 1 2 3 4	0.25 N•m (2.25 lb•in)	70° (1)	84° (1)	35°	802X-AM4	802X-AM7

(1) From one maintained position to the other.

Approximate Dimensions

Dimensions are shown in mm (in.). Dimensions are not intended to be used for installation purposes.

IMPORTANT For operating head and lever assembly dimensions that are not shown, see Approximate Dimensions on page 132. Conduit pipe opening 1/2 in. NPT.

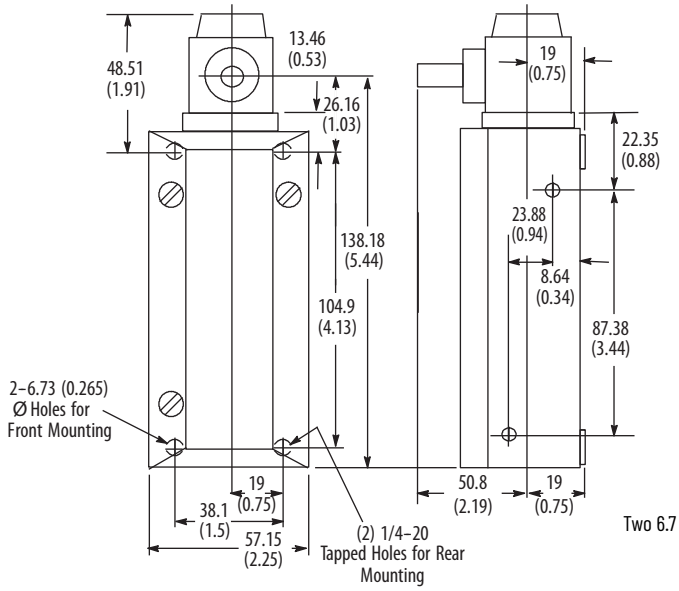

Approximate Shipping Wt.
0.9 kg (2 lb)

Mounting Hole Dimensions
Two 6.7 (0.265) Ø through hole with 12.7 (0.50) Ø c'bore 6.35 (0.25) deep for front mounting.
Two 6.35 (0.25)-20 tapped holes 14.2 (0.56) deep for rear mounting.
Two 6.35 (0.25)-20 tapped holes 12.4 (0.5) deep for side mounting.

Push Type – Spring Return

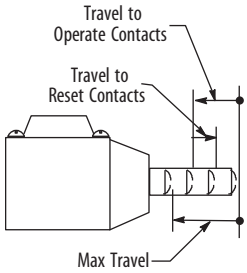

Range of Operation

Top Push Rod

Adjustable Top Push Rod

Side Push Rod

Top Push Roller

Side Push Roller

Product Selection

Operator Type	Contact Operation		Torque/Force to Operate, Max	Travel to Operate Contacts, Max	Max Travel	Travel to Reset Contacts, Max	Cat. No.	
	Normal	Operated					NEMA 4	NEMA 7 & 9
Top Push Rod	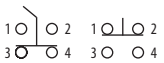		15.6 N (3.5 lb)	1.9 mm (0.075 in.)	5.1 mm (0.202 in.)	0.8 mm (0.030 in.)	802X-B4	802X-B7
Adjustable Top Push Rod							802X-BA4	802X-BA7
Side Push Rod			20.0 N (4.5 lb)	3.2 mm (0.125 in.)	5.5 mm (0.218 in.)	1.5 mm (0.057 in.)	802X-C4	802X-C7
Top Push Roller	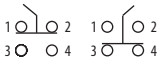		15.6 N (3.5 lb)	1.9 mm (0.075 in.)	5.1 mm (0.202 in.)	0.8 mm (0.030 in.)	802X-D4	802X-D7
Side Push Vertical Roller			20.0 N (4.5 lb)	3.2 mm (0.125 in.)	5.5 mm (0.218 in.)	1.5 mm (0.057 in.)	802X-K4	802X-K7
Side Push Horizontal Roller							802X-K14	802X-K17

Approximate Dimensions

Dimensions are shown in mm (in.). Dimensions are not intended to be used for installation purposes.

IMPORTANT For operating head and lever assembly dimensions that are not shown, see Approximate Dimensions on page 132. Conduit pipe opening 1/2 in. NPT.

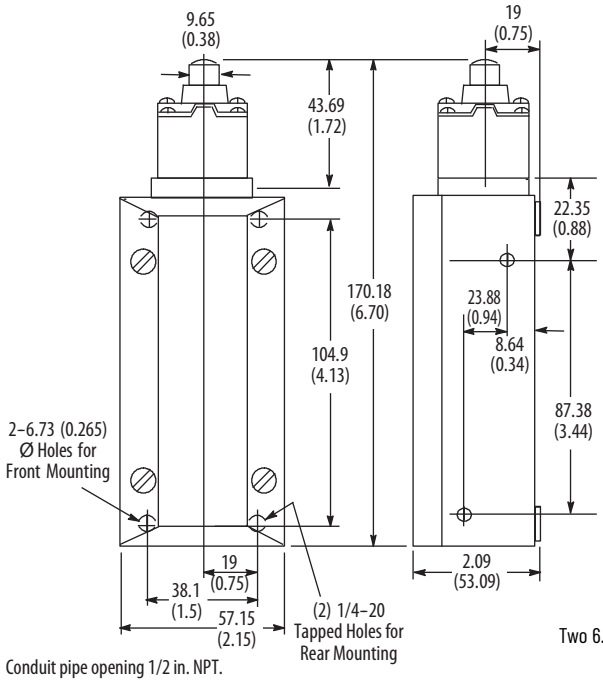

Approximate Shipping Wt.
0.9 kg (2 lb)

Mounting Hole Dimensions
Two 6.7 (0.265) Ø through hole with 12.7 (0.50) Ø c'bore 6.35 (0.25) deep for front mounting.
Two 6.35 (0.25)-20 tapped holes 14.2 (0.56) deep for rear mounting.
Two 6.35 (0.25)-20 tapped holes 12.4 (0.5) deep for side mounting.

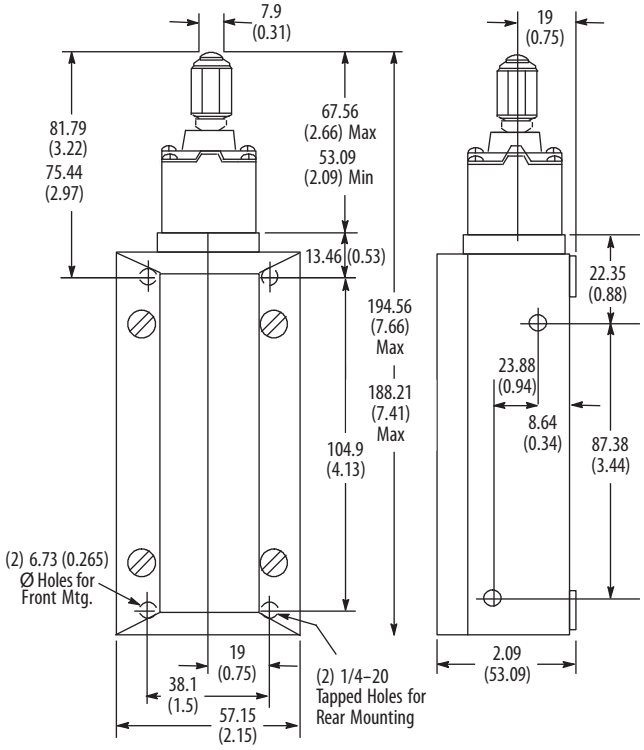

Adjustable Top Push Rod Type

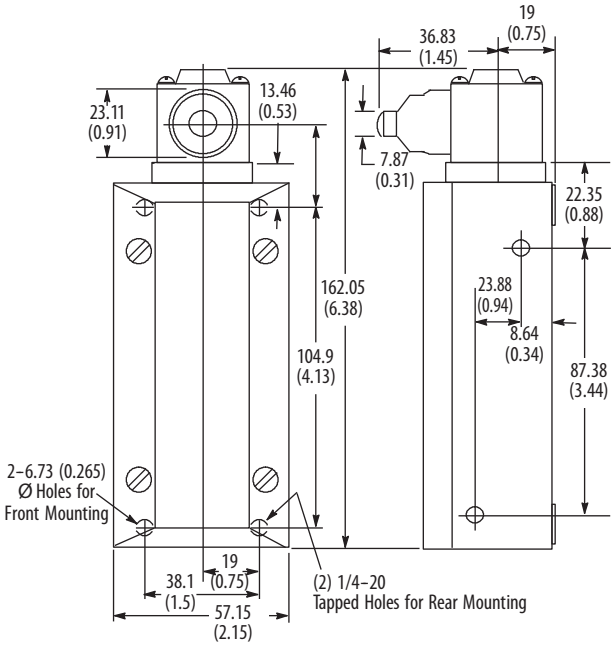

Side Push Rod Type

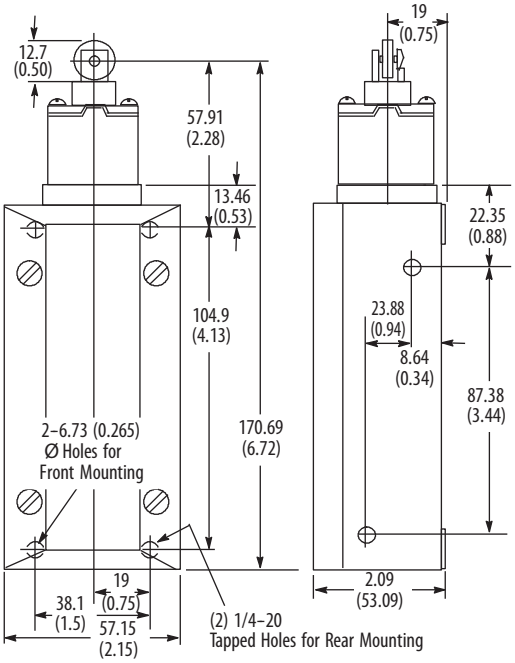

Top Push Roller Type

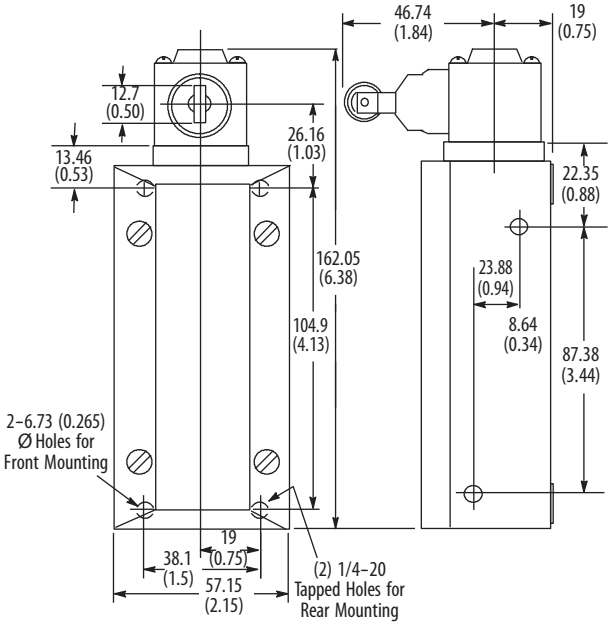

Side Push Roller Type

Approximate Shipping Wt.
0.9 kg (2 lb)

Mounting Hole Dimensions
Two 6.6 (0.26 in.) through hole with 12.7 x 6.35 mm (0.50 x 0.25 in.) deep c'bore for front mounting.
Two 1/4-20 x 14.22 (0.56 in.) deep tapped holes for rear mounting.
Two 1/4-20 x 12.7 (0.5 in.) deep tapped holes for side mounting.

Push Type – Maintained Contact

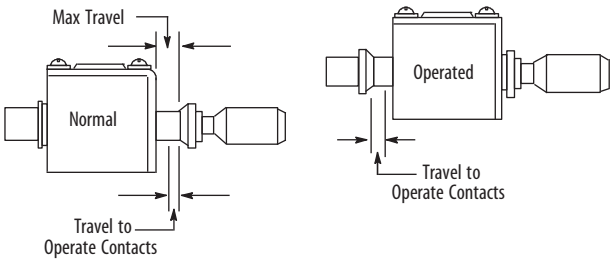

Range of Operation

Side Push Rod

Product Selection

Operator Type	Contact Operation		Torque/Force to Operate, Max	Travel to Operate Contacts, Max	Max Travel	Travel to Reset Contacts, Max	Cat. No.	
	Normal	Operated					NEMA 4	NEMA 7 & 9
Side Push Rod	1 2 / 3 4	1 2 / 3 4	35.49 N (8 lb)	4.81 mm (0.192 in.) Nominal	5.96 mm (0.235 in.)	5.30 mm (0.209 in.) Nominal	–	802X-CM7

Approximate Dimensions

Dimensions are shown in mm (in.). Dimensions are not intended to be used for installation purposes.

IMPORTANT For operating head and lever assembly dimensions that are not shown, see Approximate Dimensions on page 132. Conduit pipe opening 1/2 in. NPT.

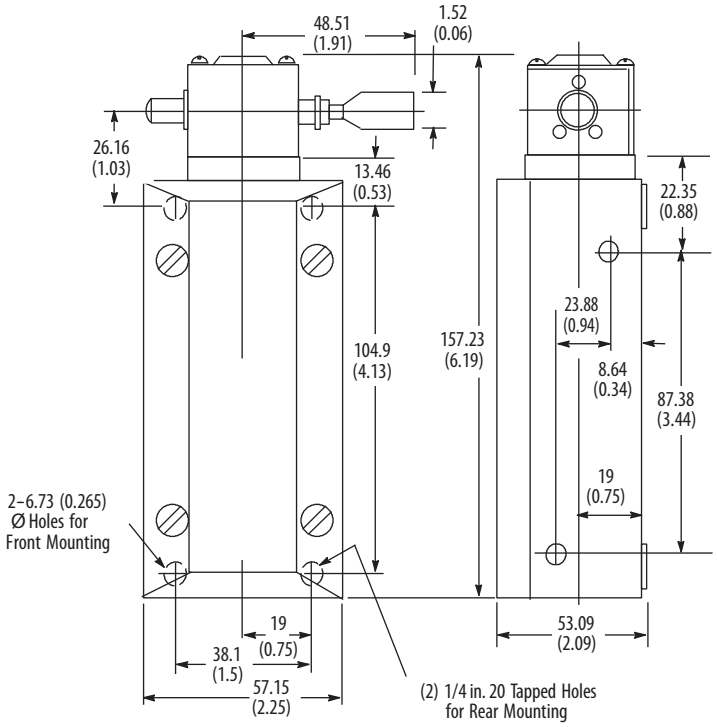

Push Type — Wobble Stick and Cat Whisker, Spring Return

IMPORTANT Mount these switches in a way that the wobble stick or cat whisker cannot be deflected beyond the maximum travel position to avoid excessive backlash, which could case undesirable repetition of contact action.

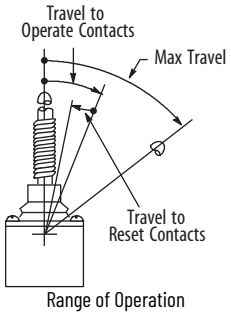

Product Selection

Operator Type	Contact Operation		Torque/Force to Operate, Max	Travel to Operate Contacts, Max (1)	Max Travel (1)	Travel to Reset Contacts, Max (1)	Cat. No.	
	Normal	Operated					NEMA 4	NEMA 7 & 9
Nylon wobble stick	1 ○ ○ 2 3 ○ ○ 4	1 ○ ○ 2 3 ○ ○ 4	0.51 N•m (4.5 lb•in)	9°	10°	4°	802X-WS4	802X-WS7
Wire cat whisker							802X-WS14	802X-WS17

(1) Operating travels and torque are measured at the rigid section of the stick or cat whisker.

Approximate Dimensions

Dimensions are shown in mm (in.). Dimensions are not intended to be used for installation purposes.

IMPORTANT For operating head and lever assembly dimensions that are not shown, see Approximate Dimensions on page 132. Conduit pipe opening 1/2 in. NPT.

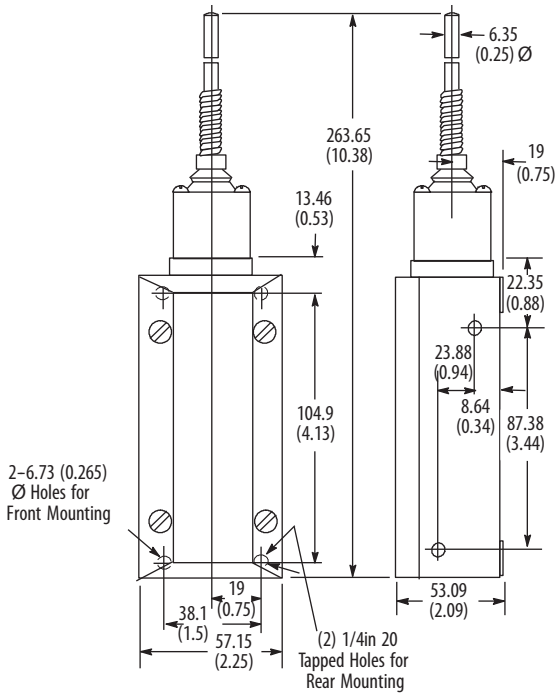

802X-WS4 AND 802X-WS7

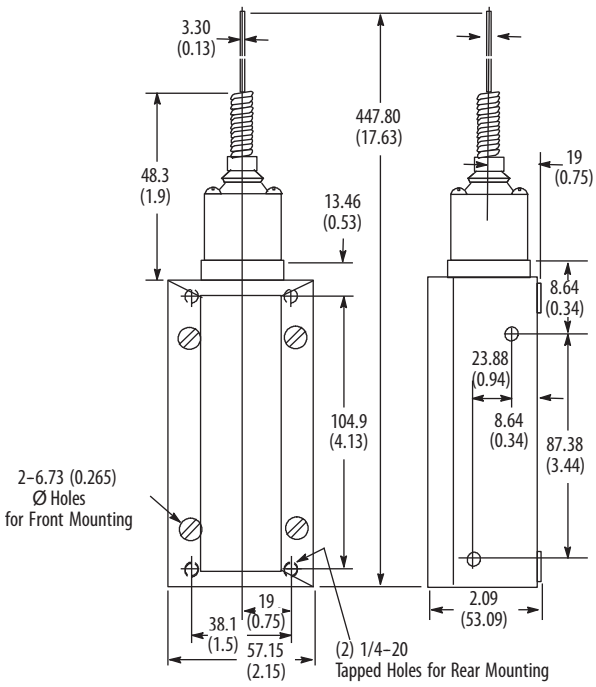

802X Wire Wobble Stick Type

Notes:

802XR Sealed Contact Hazardous Location Limit Switches

Bulletin 802XR limit switches have the following features:

- Class I, Groups B, C, and D or Class II, Groups E, F, and G
- Side rotary, wobble stick, adjustable top and top or side push styles with and without rollers

Specifications

Attribute	Value
Certifications	UL Listed and CSA Certified
Enclosure Type Rating	NEMA 7 and 9/Class I, Groups B, C, and D or Class II, Groups E, F, and G
Ambient Temperature	-29...+121 °C (-20...+250 °F) (1)

(1) Wobble stick models are rated from -18...+54 °C (0...130 °F)

Table 34 - AC Contact Rating (Max per Pole, 50 or 60 Hz, Same Polarity)

NEMA Rating Designation	Max Voltage	A		Continuous Carrying Current [A]	VA	
		Make	Break		Make	Break
B600	120	30	3	5	3600	360
	240	15	1.5			
	480	7.5	0.75			
	600	6	0.6			

Table 35 - DC Contact Rating (Max per Pole)

NEMA Rating Designation	Voltage Range	Current Rating
P300	115...125 230...250	1.1 A 0.55 A

Lever Type – Spring Return

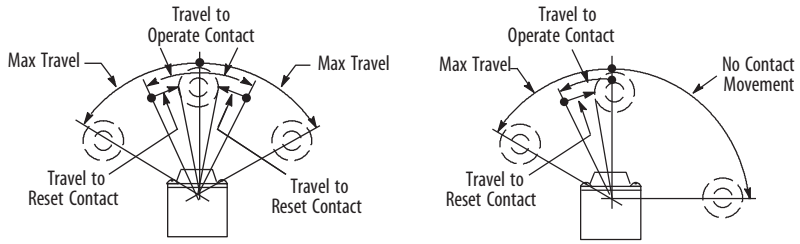

Range of Operation

Switch without Lever

Product Selection

Lever Movement	Torque/Force to Operate, Max	Travel to Operate Contacts, Max	Max Travel	Travel to Reset Contacts, Max	Contact Type	Cat. No.
Clockwise or counterclockwise	0.34 N•m (3 lb•in)	16°	42°	9°	N.O.	802XR-AF7
					N.C.	802XR-AC7
	0.51 N•m (4.5 lb•in)	7°	53°	3.5°	N.O.	802XR-HF7
					N.C.	802XR-HC7
Clockwise	0.167 N•m (1.5 lb•in)	17°	42°	10°	N.O.	802XR-A3F7
					N.C.	802XR-A3C7
	0.51 N•m (4.5 lb•in)	7°	50°	3.5°	N.O.	802XR-H1F7
					N.C.	802XR-H1C7
Counterclockwise	0.167 N•m (1.5 lb•in)	17°	42°	10°	N.O.	802XR-A4F7
					N.C.	802XR-A4C7
	0.51 N•m (4.5 lb•in)	7°	50°	3.5°	N.O.	802XR-H2F7
					N.C.	802XR-H2C7
Clockwise lever cannot move counterclockwise	0.45 N•m (4 lb•in)	20°	91°	11°	N.O.	802XR-L1F7
					N.C.	802XR-L1C7
Counterclockwise lever cannot move clockwise					N.O.	802XR-L2F7
					N.C.	802XR-L2C7

Approximate Dimensions

Dimensions are shown in mm (in.). Dimensions are not intended to be used for installation purposes.

IMPORTANT For operating head and lever assembly dimensions that are not shown, see Approximate Dimensions on page 132. Conduit pipe opening 1/2 in. NPT.

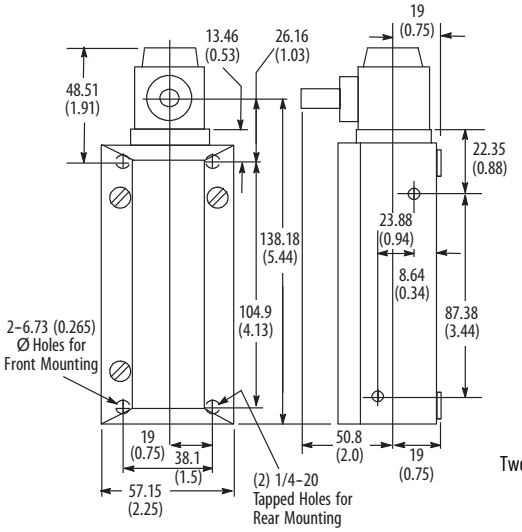

Approximate Shipping Wt.
0.9 kg (2 lb)

Mounting Hole Dimensions
Two 6.7 (0.265) Ø through hole with 12.7 (0.50) Ø c'bore 6.35 (0.25) deep for front mounting.
Two 6.35 (0.25)-20 tapped holes 14.2 (0.56) deep for rear mounting.
Two 6.35 (0.25)-20 tapped holes 12.4 (0.5) deep for side mounting.

Lever Type – Maintained Contact

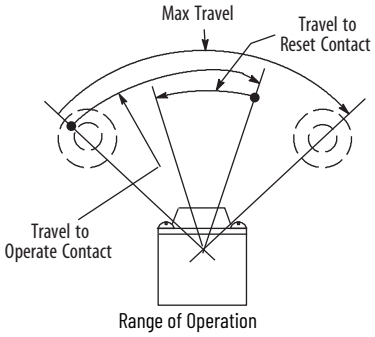

Switch without Lever

Product Selection

Lever Movement	Torque/Force to Operate, Max	Travel to Operate Contacts, Max	Max Travel	Travel to Reset Contacts, Max	Contact Type	Cat. No.
Counterclockwise	0.25 N•m (2.25 lb•in)	70° (1)	84° (1)	35°	N.O.	802XR-AMF7
					N.C.	802XR-AMC7

(1) From one maintained position to the other.

Approximate Dimensions

Dimensions are shown in mm (in.). Dimensions are not intended to be used for installation purposes.

IMPORTANT For operating head and lever assembly dimensions that are not shown, see Approximate Dimensions on page 132. Conduit pipe opening 1/2 in. NPT.

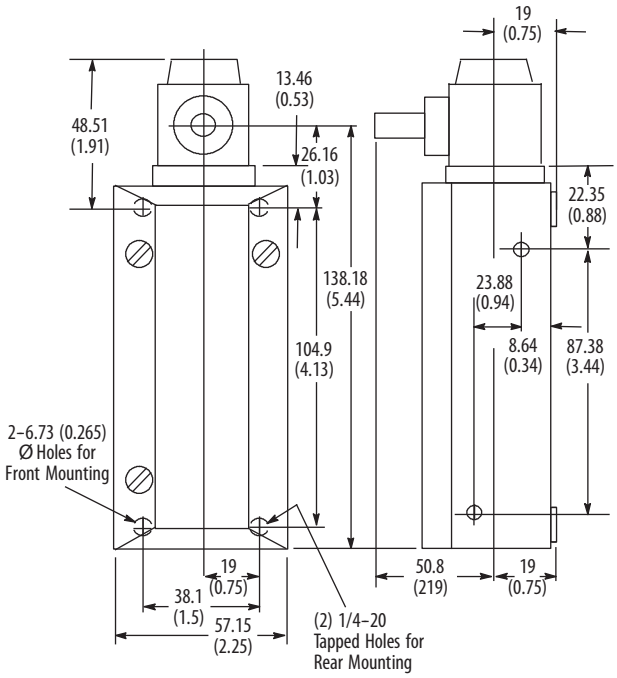

Approximate Shipping Wt.
0.9 kg (2 lb)

Mounting Hole Dimensions
Two 6.7 (0.265) Ø through hole with 12.7 (0.50) Ø c'bore 6.35 (0.25) deep for front mounting.
Two 6.35 (0.25)-20 tapped holes 14.2 (0.56) deep for rear mounting.
Two 6.35 (0.25)-20 tapped holes 12.4 (0.5) deep for side mounting.

Push Type – Spring Return

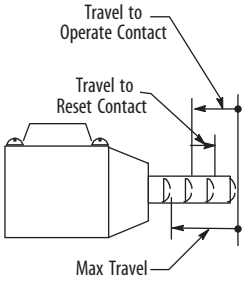

Top Push Rod

Adjustable Top Push Rod

Side Push Rod

Top Push Roller

Side Push Roller

Product Selection

Operator Type	Torque/Force to Operate, Max	Travel to Operate Contacts, Max	Max Travel	Travel to Reset Contacts, Max	Contact Type	Cat. No.
Top push rod	13.4 N (3 lb)	1.75 mm (0.069 in.)	5.1 mm (0.202 in.)	0.71 mm (0.028 in.)	N.O.	802XR-BF7
					N.C.	802XR-BC7
Adjustable top push rod	15.6 N (3.5 lb)				N.O.	802XR-BAF7
					N.C.	802XR-BAC7
Side push rod	20.0 N (4.5 lb)	3.2 mm (0.125 in.)	5.5 mm (0.218 in.)	1.5 mm (0.057 in.)	N.O.	802XR-CF7
					N.C.	802XR-CC7
Top push roller	15.6 N (3.5 lb)	1.75 mm (0.069 in.)	5.1 mm (0.202 in.)	0.71 mm (0.028 in.)	N.O.	802XR-DF7
					N.C.	802XR-DC7
Side push vertical roller	20.0 N (4.5 lb)	3.2 mm (0.125 in.)	5.5 mm (0.0218 in.)	1.5 mm (0.057 in.)	N.O.	802XR-KF7
					N.C.	802XR-KC7
Side push horizontal roller					N.O.	802XR-K1F7
					N.C.	802XR-K1C7

Approximate Dimensions

Dimensions are shown in mm (in.). Dimensions are not intended to be used for installation purposes.

IMPORTANT For operating head and lever assembly dimensions that are not shown, see Approximate Dimensions on page 132. Conduit pipe opening 1/2 in. NPT.

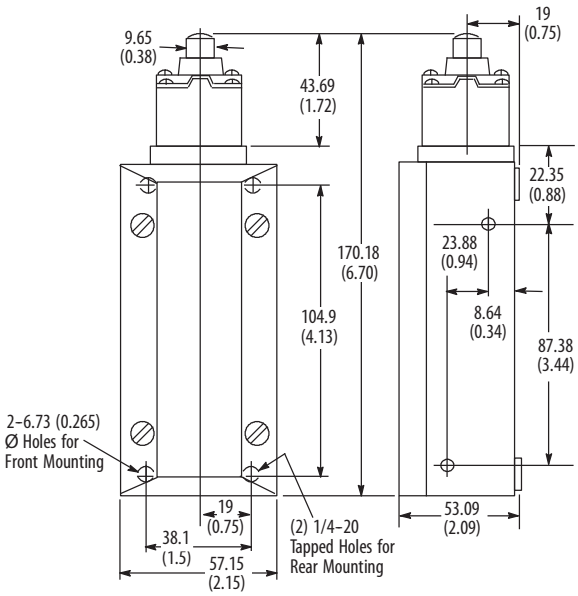

Approximate Shipping Wt.
0.9 kg (2 lb)

Mounting Hole Dimensions
Two 6.7 (0.265) Ø through hole with 12.7 (0.50) Ø c'bore 6.35 (0.25) deep for front mounting.
Two 6.35 (0.25)-20 tapped holes 14.2 (0.56) deep for rear mounting.
Two 6.35 (0.25)-20 tapped holes 12.4 (0.5) deep for side mounting.

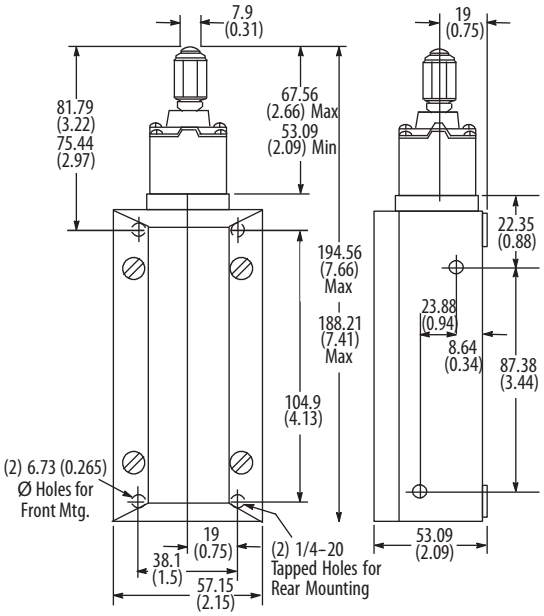

802XR Adjustable Top Push Rod Type

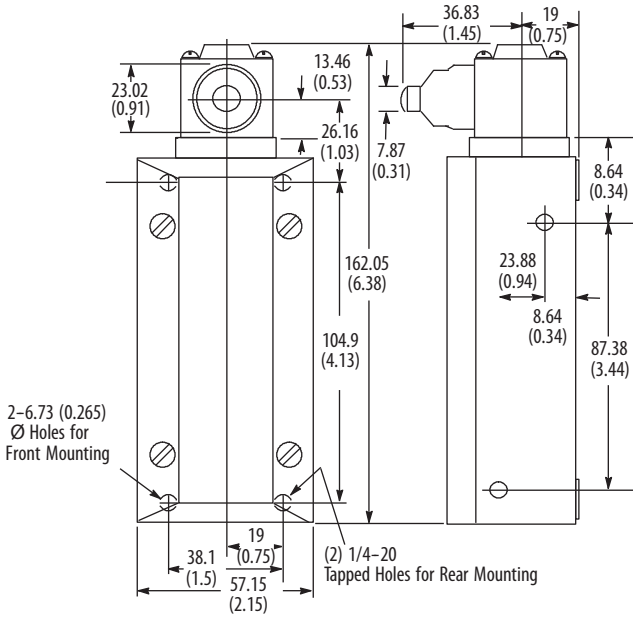

802XR Side Push Rod Type

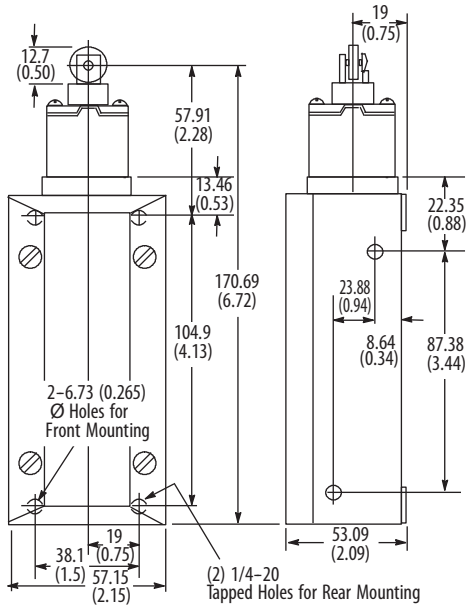

802XR Top Push Roller Type

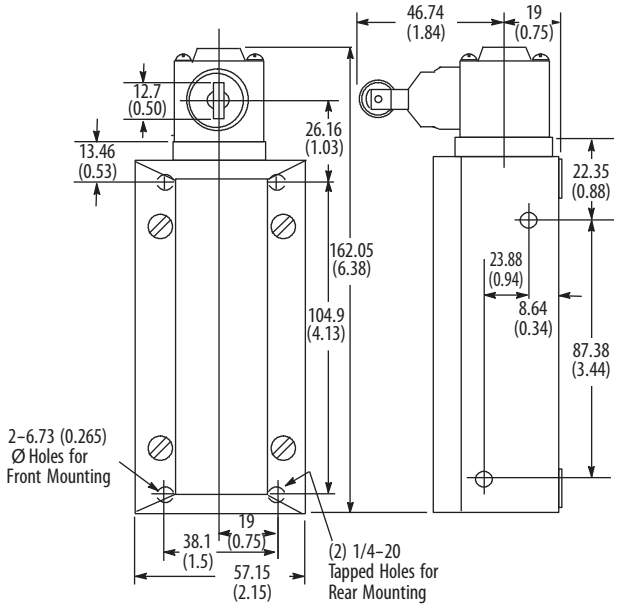

802XR Side Push Roller Type

Approximate Shipping Wt.
0.9 kg (2 lb)

Mounting Hole Dimensions
Two 6.7 (0.265) Ø through hole with 12.7 (0.50) Ø c'bore 6.35 (0.25) deep for front mounting.
Two 6.35 (0.25)-20 tapped holes 14.2 (0.56) deep for rear mounting.
Two 6.35 (0.25)-20 tapped holes 12.4 (0.5) deep for side mounting.

Cat Whisker – Spring Return

IMPORTANT Mount these switches in a way that the cat whisker cannot be deflected beyond the maximum travel position to avoid excessive backlash, which could case undesirable repetition of contact action.

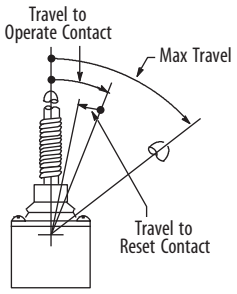

Range of Operation

Product Selection

Operator Type	Torque/Force to Operate, Max	Travel to Operate Contacts, Max (1)	Max Travel (1)	Travel to Reset Contacts, Max (1)	Contact Type	Cat. No.
Wire cat whisker	0.51 N•m (4.5 lb•ft)	11°	11°	5°	N.O.	802XR-WS1F7
					N.C.	802XR-WS1C7

(1) Operating travels and torque are measured at the rigid section of the cat whisker.

Approximate Dimensions

Dimensions are shown in mm (in.). Dimensions are not intended to be used for installation purposes.

IMPORTANT For operating head and lever assembly dimensions that are not shown, see Approximate Dimensions on page 132. Conduit pipe opening 1/2 in. NPT.

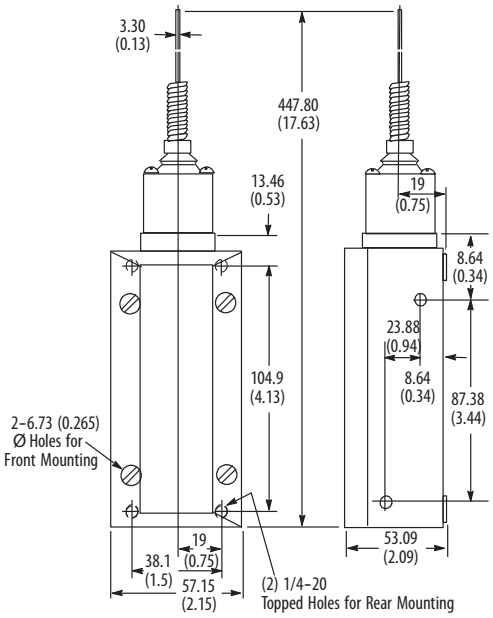

Approximate Shipping Wt.
0.9 kg (2 lb)

Mounting Hole Dimensions
Two 6.7 (0.265) Ø through hole with 12.7 (0.50) Ø c'bore 6.35 (0.25) deep for front mounting.
Two 6.35 (0.25)-20 tapped holes 14.2 (0.56) deep for rear mounting.
Two 6.35 (0.25)-20 tapped holes 12.4 (0.5) deep for side mounting.

802B Compact, Precision, and Small Precision Small Metal Body Limit Switches

Bulletin 802B limit switches have the following features:

- Rugged die-cast housing
- Industry standard dimensions
- Compact size
- Multiple mounting options
- Wide range of operating voltage and current ratings

Specifications

Description	**Compact**	**Precision**	**Small Precision**
Certifications	UL Listed, CSA Certified, and CE Marked for all applicable directives	UL Listed, CSA Certified, and CE Marked for all applicable directives	UL Recognized, CSA Certified, and CE Marked for all applicable directives
Enclosure Type Rating	NEMA 1, 3, 4, 6, 12, 13, and IP67	Non-booted: NEMA 1 and IP60 Booted: NEMA 1, 3, 4, and IP65	NEMA 1, 3, 4, 6, 13 and IP67
Mechanical Life	Approx. 10,000,000 operations (1)	Approx. 10,000,000 operations (1)	Approx. 10,000,000 operations (2)
Electrical Life	Approx. 200,000 operations (3 A 250V AC, resistive load) (1)	Approx. 500,000 operations (15 A 250V AC, resistive load) (1)	Approx. 500,000 operations (10 A 250V AC, resistive load) (2)
Operating Speed	Top Push: 0.1 mm...0.5 m per second Side Rotary: 1 mm...1 m per second	Top Push: 0.01 mm...0.5 m per second Lever Type: 0.02 mm...0.5 m per second	Top Push: 0.05 mm...0.5 m per second
Operating Frequency	Mechanical: 120 operations/minute Electrical: 30 operations/minute	Mechanical: 120 operations/minute Electrical: 20 operations/minute	Mechanical: 120 operations/minute Electrical: 20 operations/minute
Operating Temperature	-10...+70 °C (14...158 °F) with no icing	-10...+80 °C (14...176 °F) with no icing	-10...+80 °C (14...176 °F) with no icing
Protection Type	Quick blow fuse suitable for rated current is recommended	Quick blow fuse suitable for rated current is recommended	Quick blow fuse suitable for rated current is recommended
Contact Type	SPDT Form C - Top Push Panel Mount	SPDT Form C - Top Push Booted	SPDT Form C

(1) Life expectancy has been calculated at an operating temperature of 5...35 °C (41...95 °F) and an operating humidity of 40...70%.
(2) Life expectancy has been calculated at an operating temperature of 20 °C (68 °F) and an operating humidity of 65%.

Table 36 - 802B Compact Specifications

Rated Voltage	Non-inductive Resistive Load	Inductive Load			Inrush Current	
		Inductive	Motor Load			
			N.O.	N.C.	N.O.	N.C.
Standard Models						
125V AC	5 A	3 A	1.3 A	2.5 A	10 A max	20 A max
250V AC	5 A	2 A	0.8 A	1.5 A		
8V DC	5 A	5 A	3 A	3 A		
14V DC	5 A	4 A	3 A	3 A		
30V DC	4 A	3 A	3 A	3 A		
125V DC	0.4 A	0.4 A	0.05 A	0.05 A		
250V DC	0.2 A	0.2 A	0.03 A	0.03 A		
AC Light-emitting Diode (LED) Models						
125V AC	5 A	3 A	1.3 A	2.5 A	10 A max	20 A max
125V DC	0.4 A	0.4 A	0.05 A	0.05 A		
DC LED Models						
30V DC	4 A	3 A	3 A	3 A	10 A max	20 A max
Low Current Models						
125V AC	0.1 A	–			10 A max	20 A max
8V DC	0.1 A					
14V DC	0.1 A					
30V DC	0.1 A					

UL/CSA Approved Ratings

NEMA Rating Designation	Rated Voltage	A		Continuous Current	Volt	Amps
		Make	Break			
B300	120V AC	30	3	5	3600	360
	240V AC	15	1.5			
AC LED Versions						
B150	120V AC	30	3	5	3600	360

Leakage Current for LED Models

	Voltage	Leakage Current	Resistance
AC LED	125	1.7 mA	68 kΩ
DC LED	30		15 kΩ

Table 37 - 802B Precision Specifications

Rated Voltage	Non-inductive Resistive Load	Inductive Load			Inrush Current	
		Inductive	Motor Load			
			N.O.	N.C.	N.O.	N.C.
125V AC	15 A	15 A	2.5 A	5 A	15 A max	30 A max
250V AC	15 A	2.5 A	1.5 A	3 A		
480V AC	10 A	1.5 A	0.75 A	1.5 A		
125V DC	0.5 A	0.5 A	0.05 A			
250V DC	0.25 A	0.25 A	0.03 A			

UL/CSA Approved Ratings

Rated Voltage	Current	Hp
120V AC	15 A	1/8
250V AC	15 A	1/8
480V AC	15 A	1/4
125V DC	0.5 A	–
250V DC	0.25 A	–

Table 38 - 802B Small Precision Specifications

Rated Voltage	Non-inductive Resistive Load	Inductive Load			Inrush Current	
		Inductive	Motor Load			
			N.O.	N.C.	N.O.	N.C.
125V AC	10 A	10 A	2.5 A	5 A	15 A max	30 A max
250V AC	10 A	10 A	1.5 A	3 A		
8V DC	10 A	6 A	2.5 A	5 A		
14V DC	10 A	6 A	2.5 A	5 A		
30V DC	6 A	5 A	2.5 A	5 A		
125V DC	0.5 A	0.05 A	0.05 A			
250V DC	0.25 A	0.03 A	0.03 A			

UL/CSA Approved Ratings

NEMA Rating Designation	Rated Voltage	A		Continuous Current	Volt	Amps
		Make	Break			
A300	120V AC	60	6	10	7200	720
	240V AC	30	3			

Compact Limit Switches – Rotary Arm and Wobble Stick

Rotary Arm

Center Rotary Arm

Wobble Stick

Product Selection

Head Type	Torque/Force to Operate, Max	Travel to Operate Contacts, Max	Reference Value		Output Type	Cat. No.	
			Max Travel	Travel to Reset Contacts, Max		Pre-leaded	Quick-Disconnect (1)
Rotary arm	0.216 N•m (2 lb•in)	25°	70°	3°	Standard	802B-CSAAXSXC3	802B-CSAAXSXD4
							802B-CSAAXSXR4
					AC LED	802B-CSAAXSLC3	802B-CSAAXSLR4
					DC LED	802B-CSDAXSLC3	802B-CSDAXSLD4
					Low voltage/current	802B-CSDAXSXC3	–
Center rotary arm	0.216 N•m (2 lb•in)	10 ±3°	65°	4°	Standard	802B-CSAA2XSXC3	–
					AC LED	802B-CSAA2XSLC3	–
					DC LED	802B-CSDA2XSLC3	–
					Low voltage/current	802B-CSDA2XSXC3	–
Wobble stick	0.118 N•m (1.04 lb•in)	15°	18° (Nominal Value)	11° (Nominal Value)	Standard	802B-CSACXSXC3	802B-CSACXSXD4
							802B-CSACXSXR4
					AC LED	802B-CSACXSLC3	–
					DC LED	802B-CSDCXSLC3	–
					Low voltage/current	802B-CSDCXSXC3	–

(1) For quick-disconnect versions the last two digits indicate connector type:
802B-xxxxxxxD4 Indicates a 4-pin DC micro style connector
802B-xxxxxxxR4 Indicates a 4-pin AC micro style connector
QD is on a 6 inch pigtail.

Wiring

Pre-leaded Models			
COM	N.O.	N.C.	Ground
Black	Blue	Brown	Green/Yellow

Quick-Disconnect Models			
AC QD pinout:		DC QD pinout:	
Pin 1 = Common		Pin 1 = N.O.	
Pin 2 = N.O.		Pin 2 = Common	
Pin 3 = N.C.		Pin 3 = GND	
Pin 4 = GND	Male Receptacle	Pin 4 = N.C.	Male Receptacle

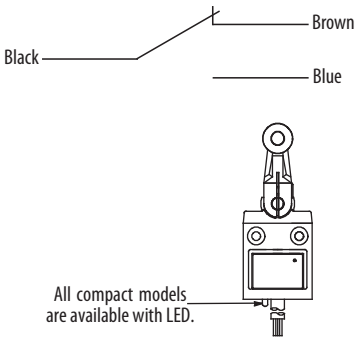

An appropriate 4-pin micro female connector with cable is available:

- 889D-F4AC-2
- 889R-F4AEA-2

Approximate Dimensions

Dimensions are shown in mm (in.). Dimensions are not intended to be used for installation purposes.

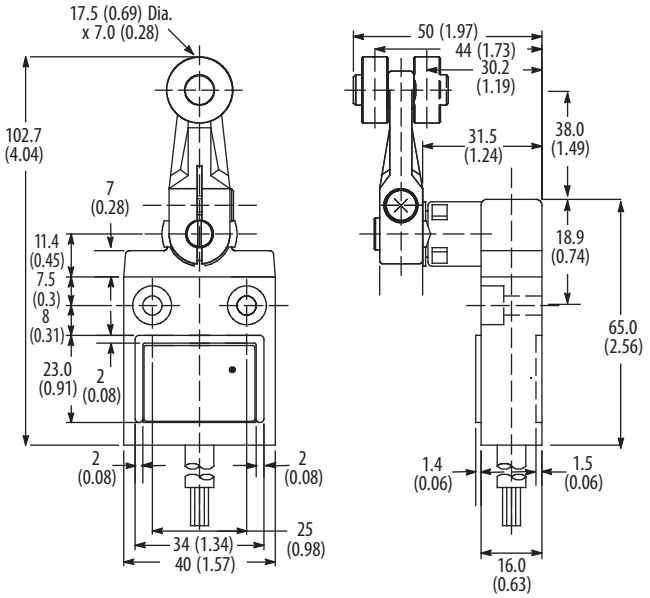

Rotary Arm

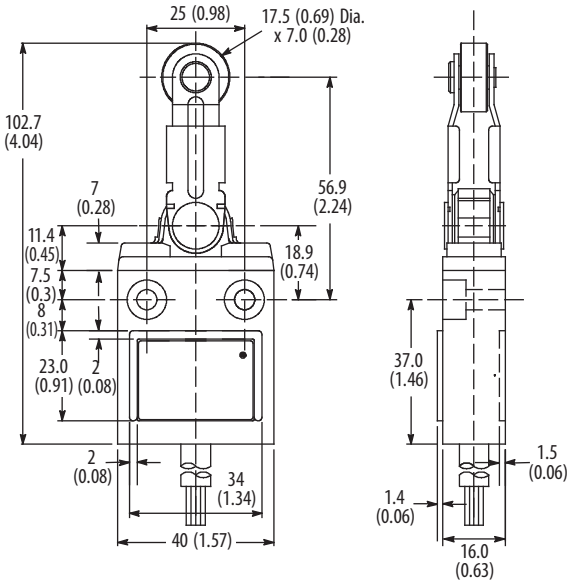

Center Rotary Arm

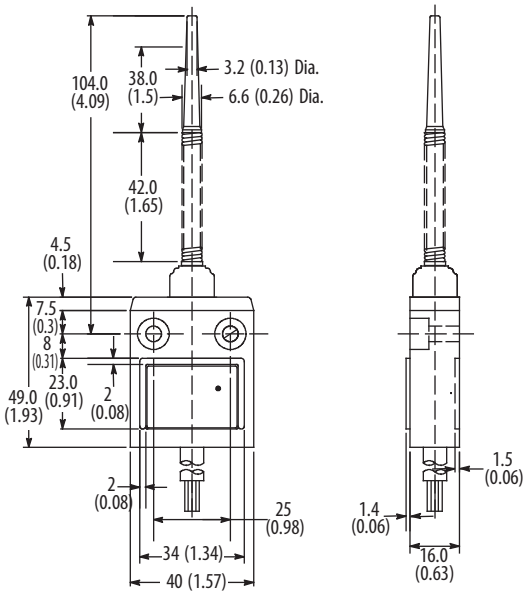

Wobble Stick

- Counter Bore = 102 mm (4.01 in.) dia.
- Mounting Hole = 5.1 mm (0.20 in.) dia.
- Counter Bore Depth = 5.8 mm (0.23 in.)
- Mounting Hole Depth = 10.1 mm (0.40 in.)
- Cable = 8.5 mm (0.33 in.) dia.

Compact Limit Switches – Top Push

Top Push

Top Push Bevel

Top Push Roller

Top Push Cross Roller

Product Selection

Head Type	Torque/Force to Operate, Max	Travel to Operate Contacts, Max	Reference Value		Output Type	Cat. No.	
			Max Travel	Travel to Reset Contacts, Max		Pre-leaded	Quick-Disconnect (1)
Top push	11.77 N (2.65 lb)	1.8 mm (0.071 in.)	5 mm (0.197 in.)	0.2 mm (0.008 in.)	Standard	802B-CSABXSXC3	802B-CSABXSXD4
							802B-CSABXSXR4
					AC LED	802B-CSABXSLC3	802B-CSABXSLR4
					DC LED	802B-CSDBXSLC3	802B-CSDBXSLD4
					Low voltage/current	802B-CSDBXSXC3	–
Top push bevel	11.77 N (2.65 lb)	1.8 mm (0.071 in.)	5 mm (0.197 in.)	0.2 mm (0.008 in.)	Standard	802B-CSAB1XSXC3	–
					AC LED	802B-CSAB1XSLC3	–
					DC LED	802B-CSDB1XSLC3	–
					Low voltage/current	802B-CSDB1XSXC3	–
Top push roller	11.77 N (2.65 lb)	1.8 mm (0.071 in.)	5 mm (0.197 in.)	0.2 mm (0.008 in.)	Standard	802B-CSADXSXC3	802B-CSADXSXD4
							802B-CSADXSXR4
					AC LED	802B-CSADXSLC3	802B-CSADXSLR4
					DC LED	802B-CSDDXSLC3	802B-CSDDXSLD4
					Low voltage/current	802B-CSDDXSXC3	–
Top push cross roller	11.77 N (2.65 lb)	1.8 mm (0.071 in.)	5 mm (0.197 in.)	0.2 mm (0.008 in.)	Standard	802B-CSAD1XSXC3	802B-CSAD1XSXD4
							802B-CSAD1XSXR4
					AC LED	802B-CSAD1XSLC3	802B-CSAD1XSLR4
					DC LED	802B-CSDD1XSLC3	802B-CSDD1XSLD4
					Low voltage/current	802B-CSDD1XSXC3	–

(1) For quick-disconnect versions the last two digits indicate connector type:
802B-xxxxxxxD4 Indicates a 4-pin DC micro style connector
802B-xxxxxxxR4 Indicates a 4-pin AC micro style connector
QD is on a 6 inch pigtail.

Wiring

Pre-leaded Models			
COM	**N.O.**	**N.C.**	**Ground**
Black	Blue	Brown	Green/Yellow

Quick-Disconnect Models

AC QD pinout:		DC QD pinout:	
Pin 1 = Common		Pin 1 = N.O.	
Pin 2 = N.O.		Pin 2 = Common	
Pin 3 = N.C.		Pin 3 = GND	
Pin 4 = GND	Male Receptacle	Pin 4 = N.C.	Male Receptacle

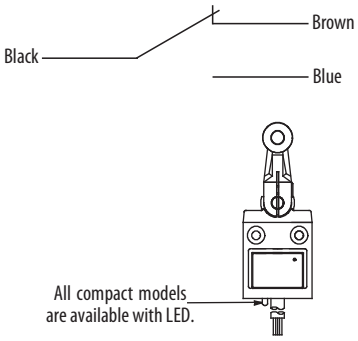

An appropriate 4-pin micro female connector with cable is available:

- 889D-F4AC-2
- 889R-F4AEA-2

Approximate Dimensions

Dimensions are shown in mm (in.). Dimensions are not intended to be used for installation purposes.

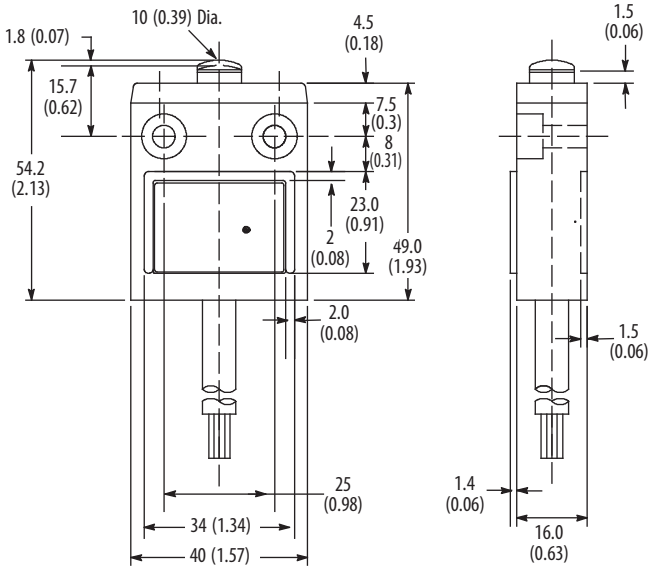

Top Push

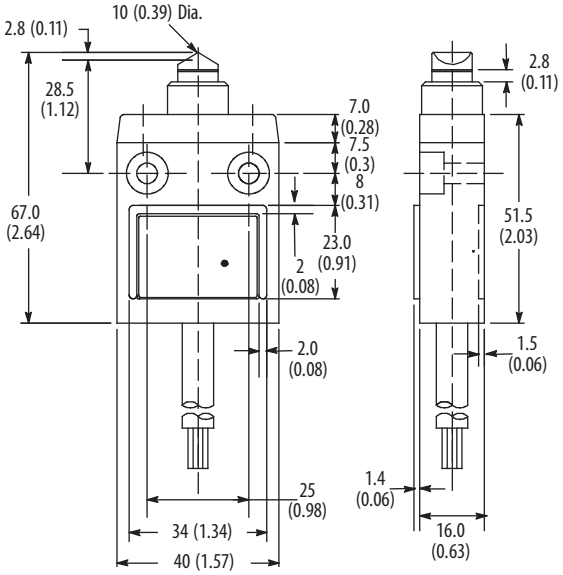

Top Push Bevel

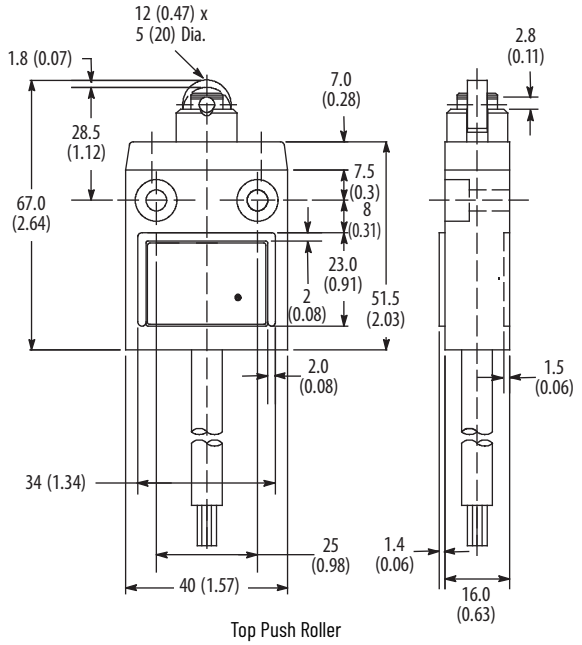

Top Push Roller

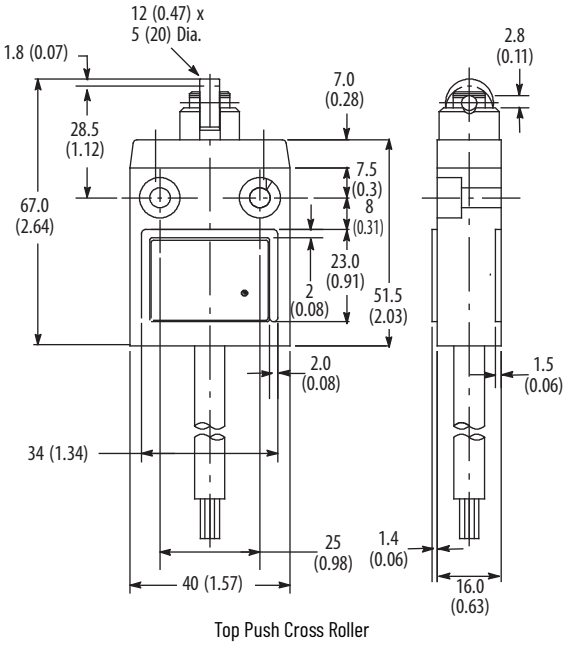

Top Push Cross Roller

Compact Limit Switches – Panel Mount

Top Push Panel Mount

Top Push Roller Panel Mount

Top Push Cross Roller Panel Mount

Product Selection

Head Type	Torque/Force to Operate, Max	Travel to Operate Contacts, Max	Max Travel	Travel to Reset Contacts, Max	Output Type	Cat. No.
Top push panel mount	11.77 N (2.65 lb)	1.8 mm (0.071 in.)	5 mm (0.197 in.)	0.2 mm (0.008 in.)	Standard	802B-CPABXSXC3
					AC LED	802B-CPABXSLC3
					DC LED	802B-CPDBXSLC3
					Low Voltage/Current	802B-CPDBXSXC3
Top push roller panel mount					Standard	802B-CPADXSXC3
					AC LED	802B-CPADXSLC3
					DC LED	802B-CPDDXSLC3
					Low Voltage/Current	802B-CPDDXSXC3
Top push cross roller panel mount					Standard	802B-CPAD1XSXC3
					AC LED	802B-CPAD1XSLC3
					DC LED	802B-CPDD1XSLC3
					Low Voltage/Current	802B-CPDD1XSXC3

Wiring

Pre-leaded Models			
COM	N.O.	N.C.	Ground
Black	Blue	Brown	Green/Yellow

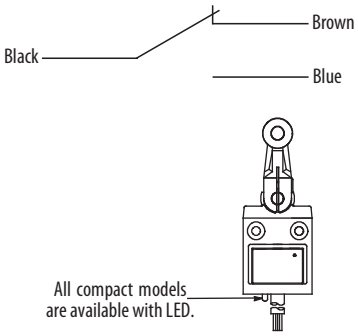

Approximate Dimensions

Dimensions are shown in mm (in.). Dimensions are not intended to be used for installation purposes.

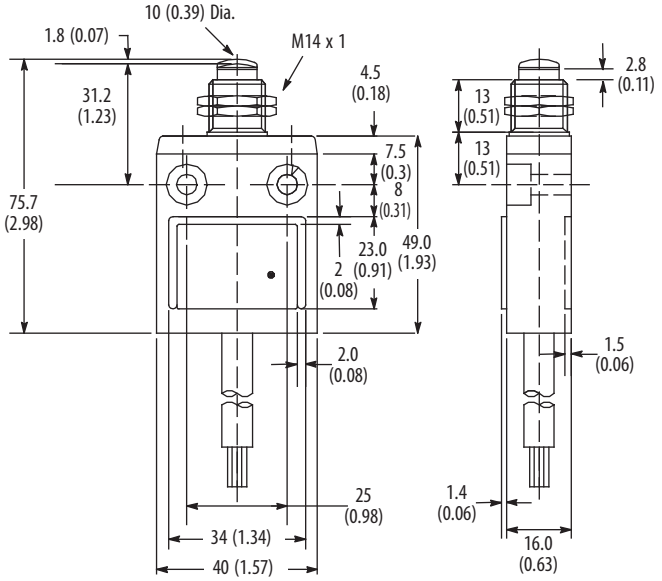

Top Push Panel Mount

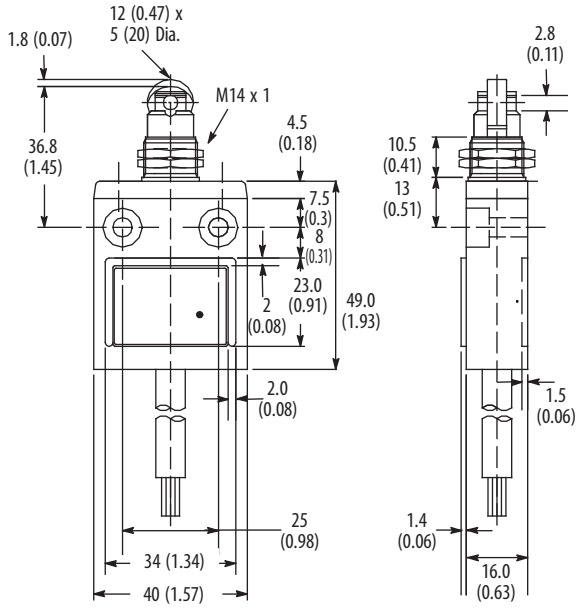

Top Push Roller Panel Mount

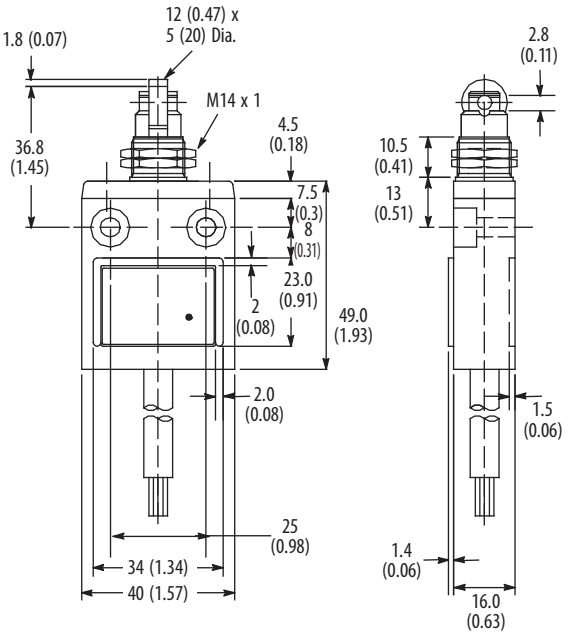

Top Push Cross Roller Panel Mount

Compact Limit Switches – Top Push Booted

Top Push Booted

Top Push Roller Booted

Top Push Cross Roller Booted Head

Product Selection

Head Type	Torque/Force to Operate, Max	Travel to Operate Contacts, Max	Reference Value		Output Type	Cat. No.	
			Max Travel	Travel to Reset Contacts, Max		Pre-leaded	Quick-Disconnect (1)
Top push booted head	17.65 N (3.97 lb)	1.8 mm (0.071 in.)	5 mm (0.197 in.)	0.2 mm (0.008 in.)	Standard	802B-CSABBSXC3	802B-CSABBSXD4
							802B-CSABBSXR4
					AC LED	802B-CSABBSLC3	802B-CSABBSLR4
					DC LED	802B-CSDBBSLC3	802B-CSDBBSLD4
					Low voltage/current	802B-CSDBBSXC3	–
Top push roller booted head					Standard	802B-CSADBSXC3	802B-CSADBSXD4
							802B-CSADBSXR4
					AC LED	802B-CSADBSLC3	802B-CSADBSLR4
					DC LED	802B-CSDDBSLC3	802B-CSDDBSLD4
					DC LED	802B-CSDDBSLD4	–
Top push cross roller booted head					Standard	802B-CSAD1BSXC3	802B-CSAD1BSXD4
					Standard		802B-CSAD1BSXR4
					AC LED	802B-CSAD1BSLC3	802B-CSAD1BSLR4
					DC LED	802B-CSDD1BSLC3	802B-CSDD1BSLD4
					Low voltage/current	802B-CSDD1BSXC3	–

(1) For quick-disconnect versions the last two digits indicate connector type:
802B-xxxxxxxD4 Indicates a 4-pin DC micro style connector
802B-xxxxxxxR4 Indicates a 4-pin AC micro style connector
QD is on a 6 inch pigtail.

Wiring

Pre-leaded Models			
COM	N.O.	N.C.	Ground
Black	Blue	Brown	Green/Yellow

Quick-Disconnect Models			
AC QD pinout:	Male Receptacle	DC QD pinout:	Male Receptacle
Pin 1 = Common		Pin 1 = N.O.	
Pin 2 = N.O.		Pin 2 = Common	
Pin 3 = N.C.		Pin 3 = GND	
Pin 4 = GND		Pin 4 = N.C.	

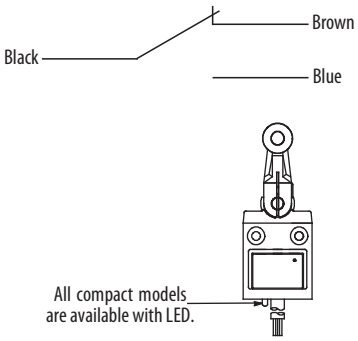

An appropriate 4-pin micro female connector with cable is available:

- 889D-F4AC-2
- 889R-F4AEA-2

Approximate Dimensions

Dimensions are shown in mm (in.). Dimensions are not intended to be used for installation purposes.

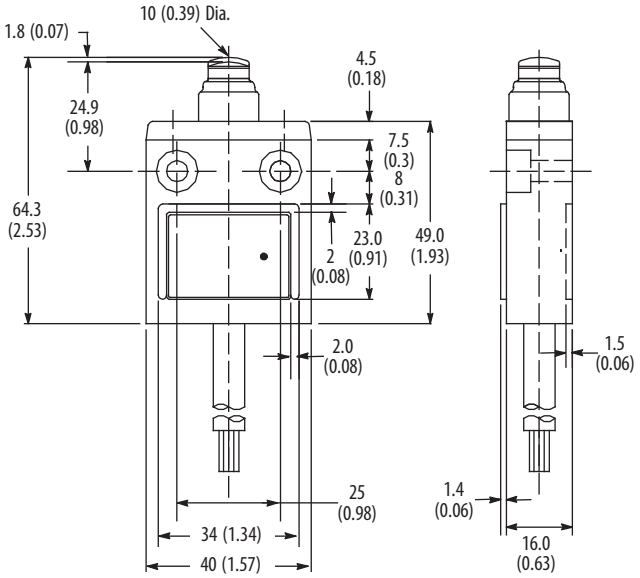

Top Push Sealed Head

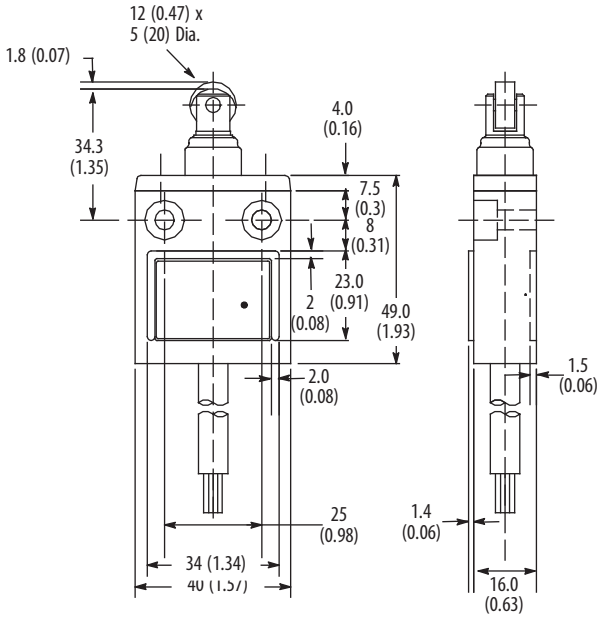

Top Push Roller Sealed Head

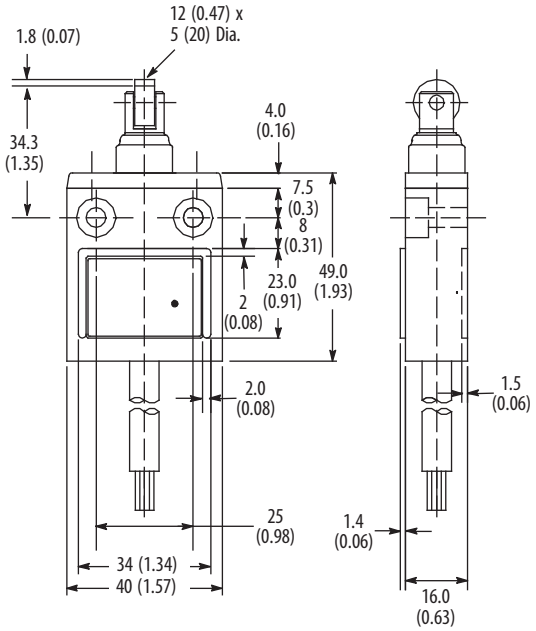

Top Push Cross Roller Sealed Head

Precision Limit Switches — Side Mount

Top Push

Top Push Roller

Top Push Cross Roller

Roller Lever

One-way Roller Lever

Product Selection

Head Type	Torque/Force to Operate, Max	Travel to Operate Contacts, Max	Max Travel	Travel to Reset Contacts, Max	Mounting Style	Cat. No.
Top push	2.45...3.43 N (0.55...0.77 lb)	0.4 mm (0.016 in.)	5.9 mm (0.232 in.)	0.05 mm (0.002 in.)	Side	802B-PSABXSX
Top push roller		0.5 mm (0.020 in.)	4.1 mm (0.161 in.)			802B-PSADXSX
Top push cross roller						802B-PSAD1XSX
Roller lever	5.59 N (1.28 lb)	4 mm (0.157 in.)	10 mm (0.394 in.)	0.4 mm (0.016 in.)		802B-PSARXSX
One-way roller lever						802B-PSAR2XSX

Wiring

1	2	3
⊕	⊕	⊕
Com	N.O.	N.C.

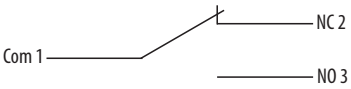

Approximate Dimensions

Dimensions are shown in mm (in.). Dimensions are not intended to be used for installation purposes.

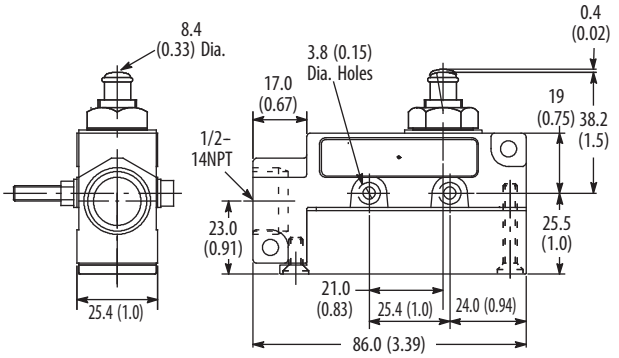

802B-PSABXSX

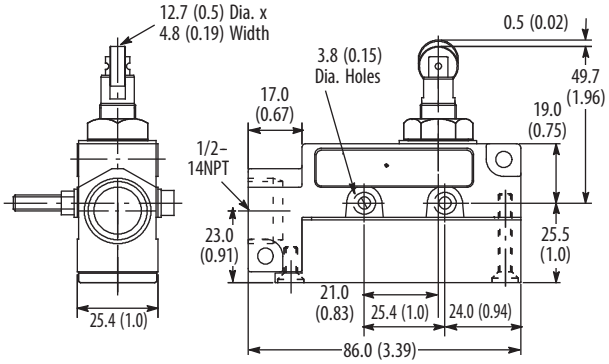

802B-PSADXSX

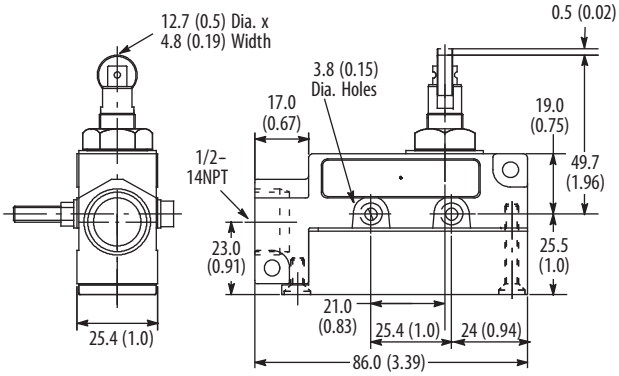

802B-PSD1XSX

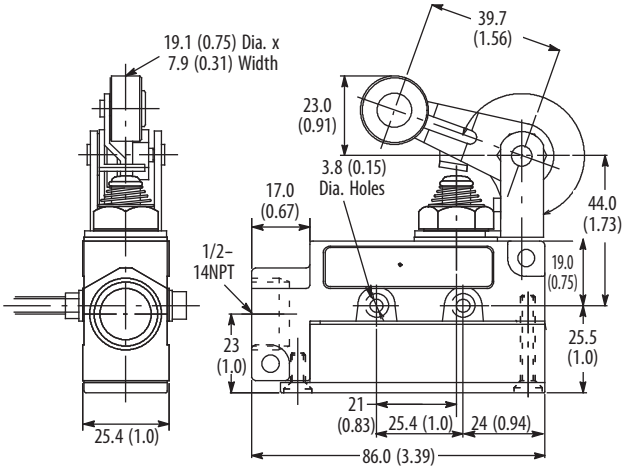

802B-PSARXSX

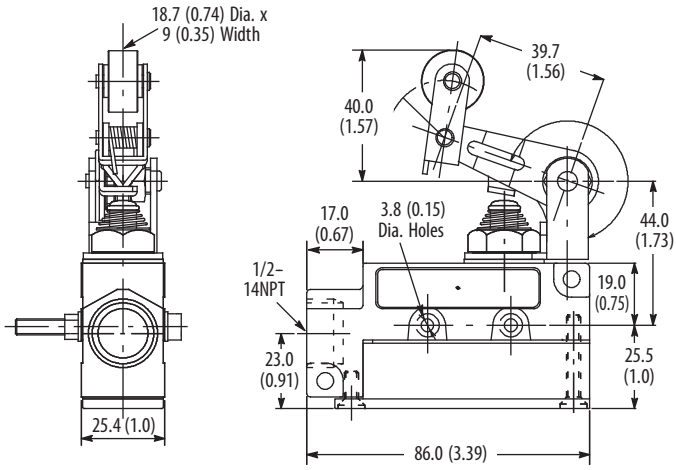

802B-PSAR2XSX

Precision Limit Switches – Booted Side Mount

Top Push

Top Push Roller

Top Push Cross Roller

Roller Lever

One-way Roller Lever

Product Selection

Head Type	Torque/Force to Operate, Max	Travel to Operate Contacts, Max	Max Travel	Travel to Reset Contacts, Max	Mounting Style	Cat. No.
Top push booted	7.85 N (1.76 lb)	2 mm (0.079 in.)	7 mm (0.276 in.)	0.1 mm (0.004 in.)	Side	802B-PSABBSX
Top push roller booted	4.9 N (1.09 lb)	1 mm (0.039 in.)	4.5 mm (0.177 in.)	0.12 mm (0.005 in.)		802B-PSADBSX
Top push cross roller booted						802B-PSAD1BSX
Roller lever booted	6.28 N (1.40 lb)	5 mm (0.197 in.)	11 mm (0.433 in.)	0.4 mm (0.016 in.)		802B-PSARBSX
One-way roller lever booted						802B-PSAR2BSX

Wiring

1	2	3
⊕	⊕	⊕
Com	N.O.	N.C.

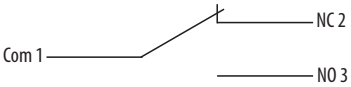

Approximate Dimensions

Dimensions are shown in mm (in.). Dimensions are not intended to be used for installation purposes.

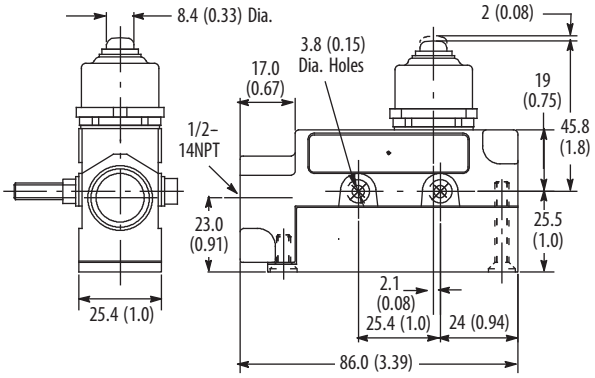

802B-PSABBSX

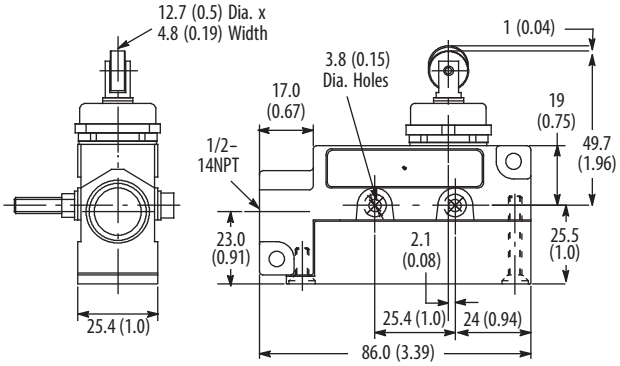

802B-PSADBSX

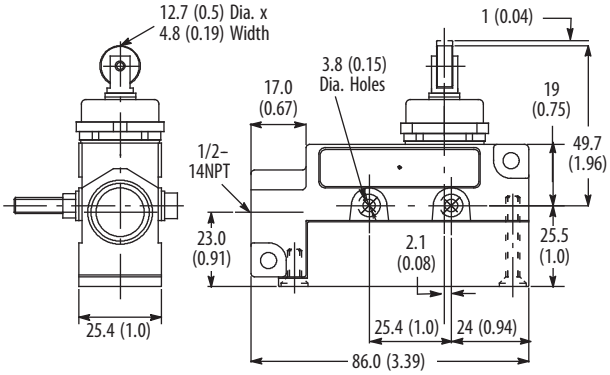

802B-PSAD1BSX

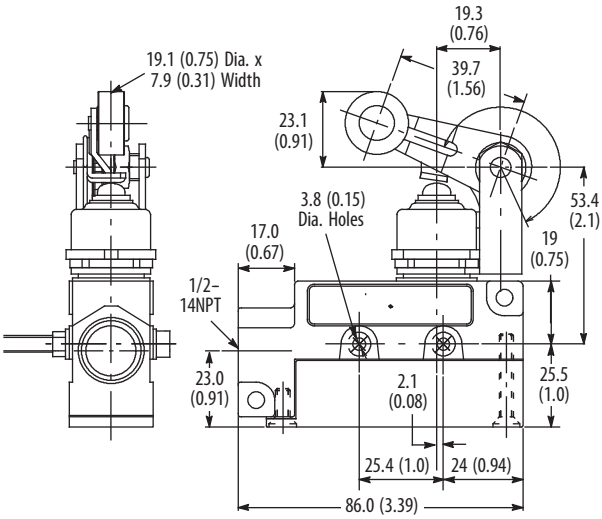

802B-PSARBSX

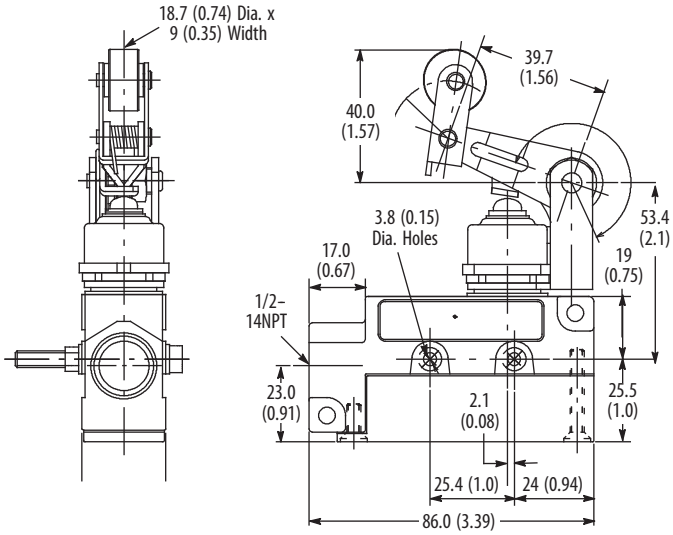

802B-PSAR2BSX

Precision Limit Switches – Flange Mount

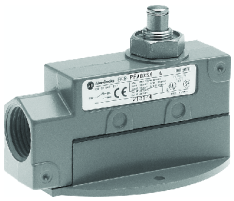
Top Push

Top Push Roller

Top Push Cross Roller

Roller Lever

One-way Roller Lever

Product Selection

Head Type	Torque/Force to Operate, Max	Travel to Operate Contacts, Max	Max Travel	Travel to Reset Contacts, Max	Mounting Style	Cat. No.
Top push	2.45...3.43 N (0.55...0.77 lb)	0.4 mm (0.016 in.)	5.9 mm (0.232 in.)	0.05 mm (0.002 in.)	Flange	802B-PFABXSX
Top push roller		0.5 mm (0.020 in.)	4.1 mm (0.161 in.)			802B-PFADXSX
Top push cross roller						802B-PFAD1XSX
Roller lever	5.59 N (1.28 lb)	4 mm (0.157 in.)	10 mm (0.394 in.)	0.4 mm (0.016 in.)		802B-PFARXSX
One-way roller lever						802B-PFAR2XSX

Wiring

1	2	3
⊕	⊕	⊕
Com	N.O.	N.C.

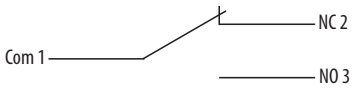

Approximate Dimensions

Dimensions are shown in mm (in.). Dimensions are not intended to be used for installation purposes.

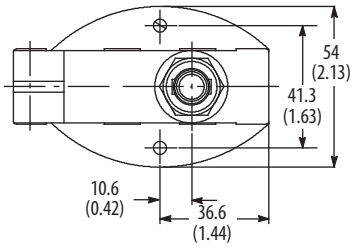

Top View

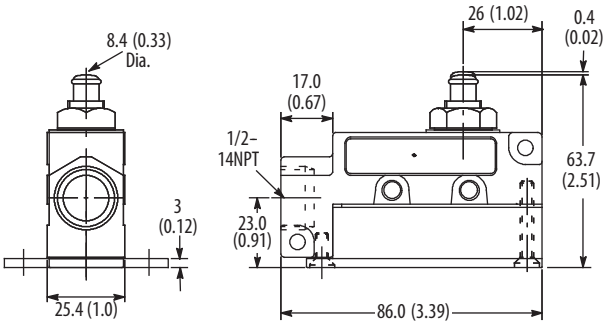

802B-PFABXSX

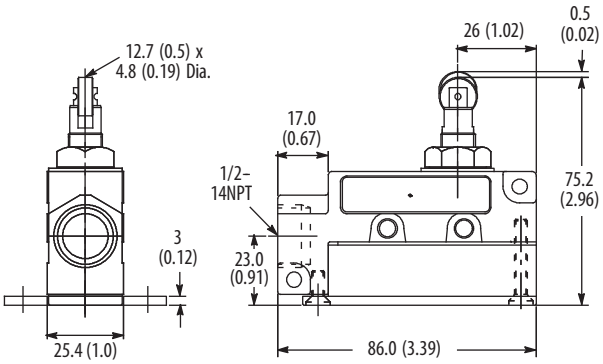

802B-PFADXSX

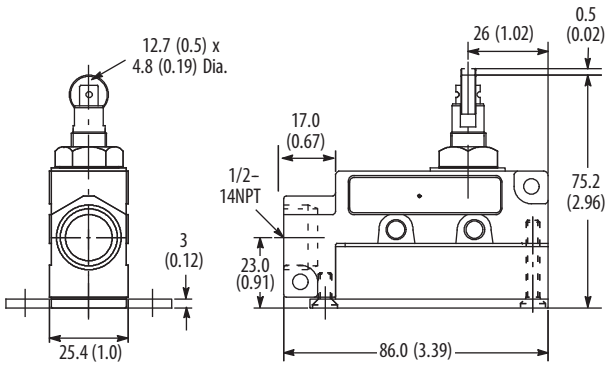

802B-PFAD1XSX

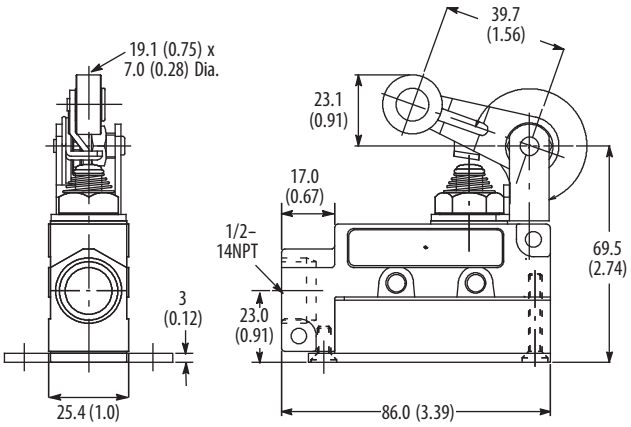

802B-PFARXSX

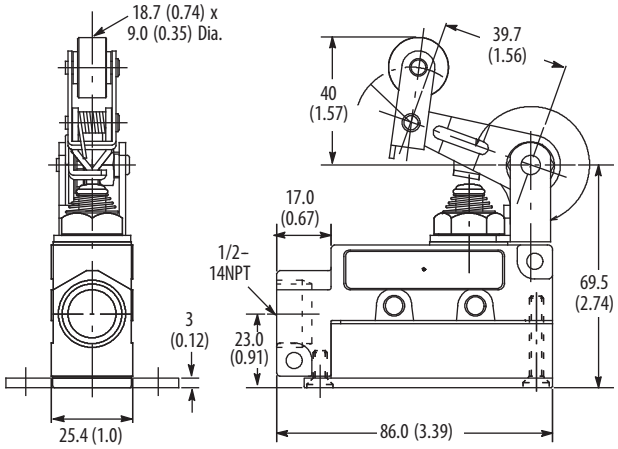

802B-PFAR2XSX

Precision Limit Switches – Booted Flange Mount

Top Push Booted

Top Push Roller Booted

Top Push Cross Roller Booted

Roller Lever Booted

One-way Roller Lever Booted

Product Selection

Head Type	Torque/Force to Operate, Max	Travel to Operate Contacts, Max	Max Travel	Travel to Reset Contacts, Max	Mounting Style	Cat. No.
Top push booted	7.85 N (1.76 lb)	2 mm (0.079 in.)	7 mm (0.276 in.)	0.1 mm (0.004 in.)	Flange	802B-PFABBSX
Top push roller booted	4.9 N (1.09 lb)	1 mm (0.039 in.)	4.5 mm (0.177 in.)	0.12 mm (0.005 in.)		802B-PFADBSX
Top push cross roller booted						802B-PFAD1BSX
Roller lever booted	6.28 N (1.40 lb)	5 mm (0.197 in.)	11 mm (0.433 in.)	0.4 mm (0.016 in.)		802B-PFARBSX
One-way roller lever booted						802B-PFAR2BSX

Wiring

1	2	3
⊕	⊕	⊕
Com	N.O.	N.C.

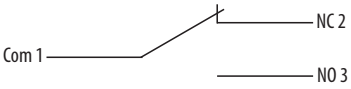

Approximate Dimensions

Dimensions are shown in mm (in.). Dimensions are not intended to be used for installation purposes.

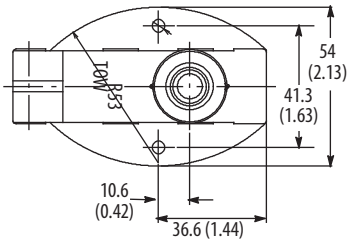

Top View

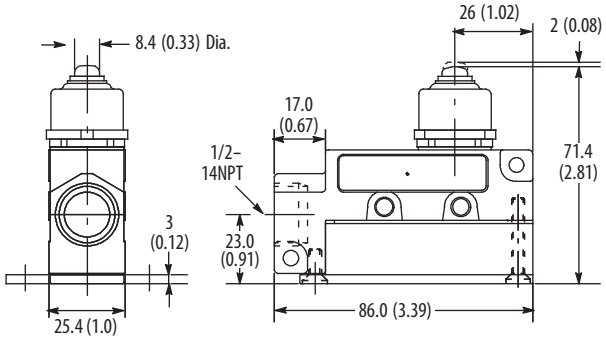

802B-PFABXSX

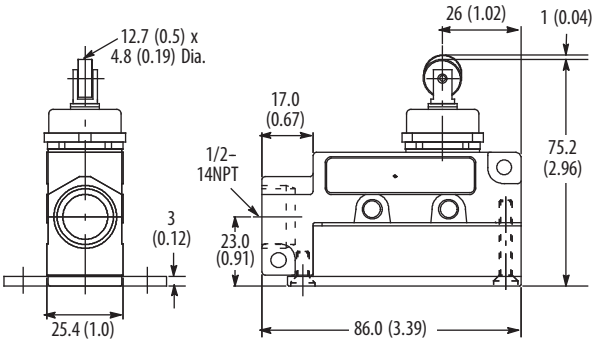

802B-PFADXSX

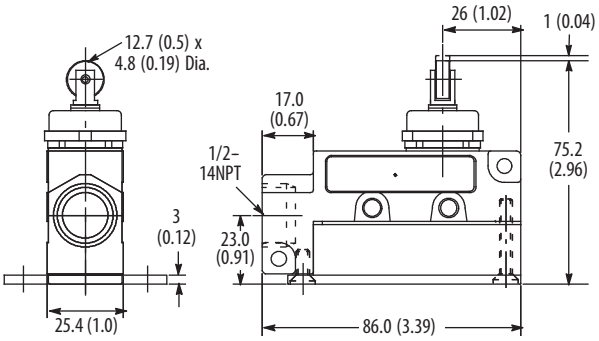

802B-PFAD1XSX

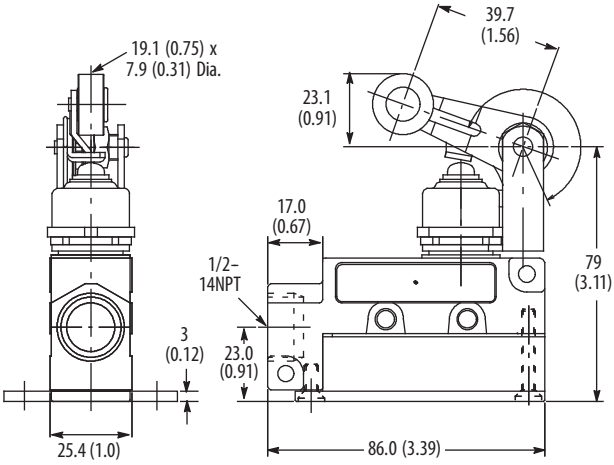

802B-PFARXSX

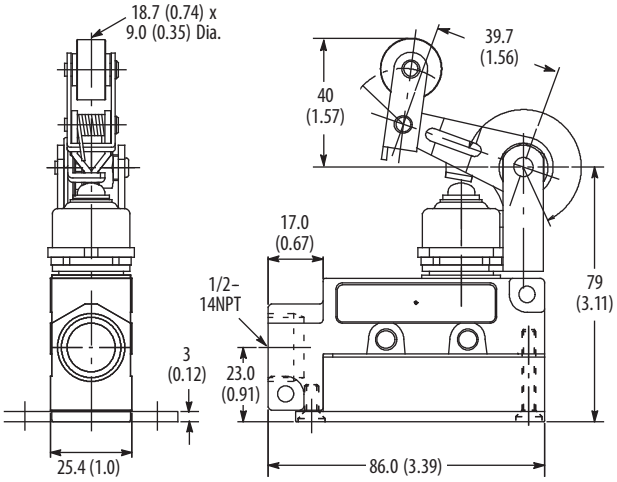

802B-PFAR2XSX

Small Precision Limit Switches — Side Mount

Top Push

Top Push Panel Mount

Top Push Roller Panel Mount

Top Push Cross Roller Panel Mount

Top Push Roller Booted

Top Push Cross Roller Booted

Product Selection

Head Type	Torque/Force to Operate, Max	Travel to Operate Contacts, Max	Max Travel	Travel to Reset Contacts, Max	Mounting Style	Cat. No.
Top push	11.8 N (2.65 lb)	1.5 mm (0.059 in.)	3.9 mm (0.154 in.)	0.2 mm (0.008 in.)	Side	802B-SSABXSX
Top push panel mount			4.5 mm (0.177 in.)			802B-SPABXSX
Top push roller panel mount						802B-SPADXSX
Top push cross roller panel mount						802B-SPAD1XSX
Top push roller booted	6.86 N (1.54 lb)		4 mm (0.157 in.)			802B-SSADBSX
Top push cross roller booted						802B-SSAD1BSX

Wiring

1	2	3
⊕	⊕	⊕
Com	N.O.	N.C.

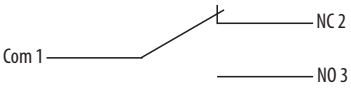

Approximate Dimensions

Dimensions are shown in mm (in.). Dimensions are not intended to be used for installation purposes.

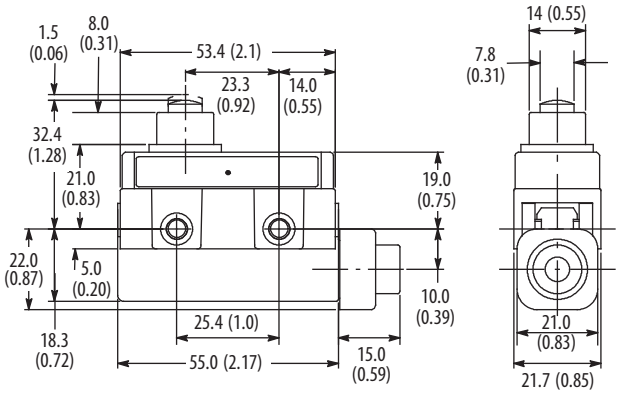

802B-SSABXSX

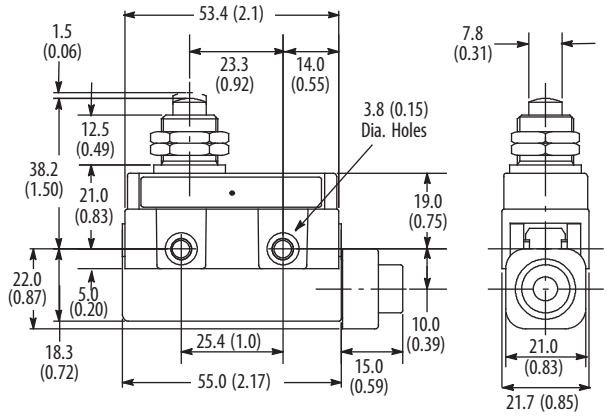

802B-SPABXSX

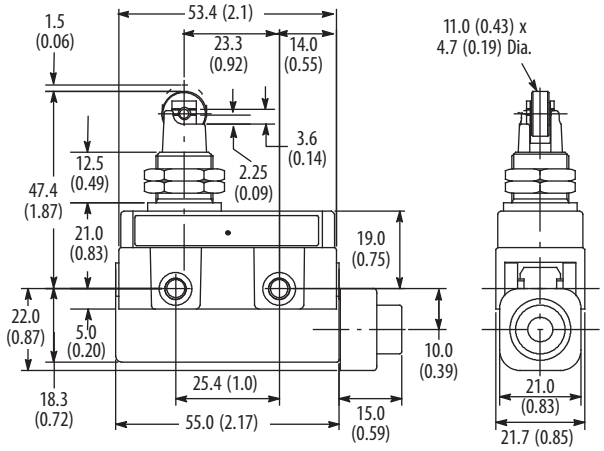

802B-SPADXSX

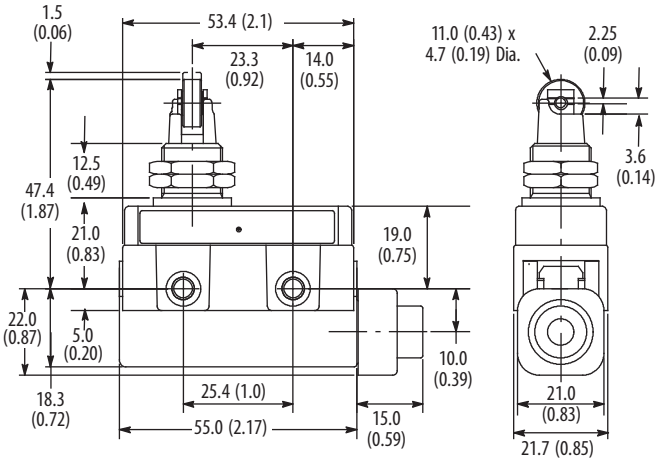

802B-SPAD1XSX

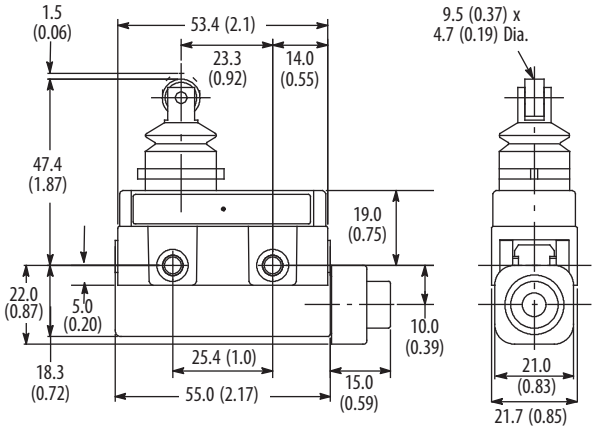

802B-SSADBSX

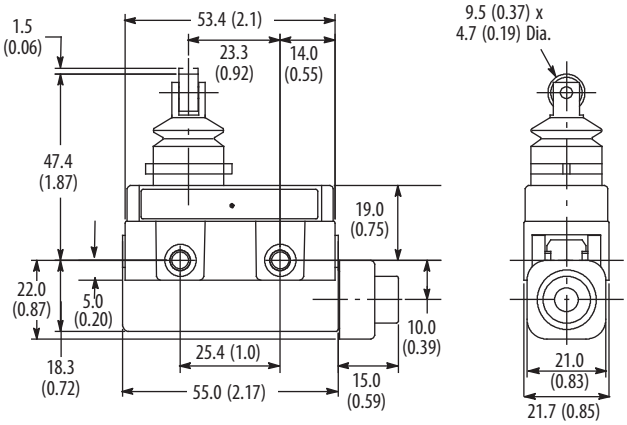

802B-SSAD1BSX

Small Precision Limit Switches — Lever

Short Hinge Lever

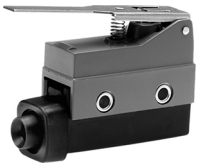
Hinge Lever

Short Roller Lever

Roller Lever

Short One-way Roller Lever

One-way Roller Lever

Product Selection

Head Type	Torque/Force to Operate, Max	Travel to Operate Contacts, Max	Max Travel	Travel to Reset Contacts, Max	Mounting Style	Cat. No.
Short hinge lever	3.92 N (0.88 lb)	6.2±1.2 mm (0.244 in.)	12.2 mm (0.480 in.)	1 mm (0.04 in.)	Side	802B-SSAH1XSX
Hinge lever	2.75 N (0.62 in.)	8.2±1.2 mm (0.323 in.)	16.6 mm (0.645 in.)	1.4 mm (0.055 in.)		802B-SSAHXSX
Short roller lever	3.92 N (0.88 lb)	6.2±1.2 mm (0.244 in.)	12.2 mm (0.480 in.)	1 mm (0.04 in.)		802B-SSAR1XSX
Roller lever	2.75 N (0.62 in.)	8.3±1.2 mm (0.327 in.)	16.7 mm (0.657 in.)	1.4 mm (0.055 in.)		802B-SSARXSX
Short one-way roller lever	3.92 N (0.88 lb)	6.2±1.2 mm (0.244 in.)	12.2 mm (0.480 in.)	1 mm (0.04 in.)		802B-SSAR3XSX
One-way roller lever	2.75 N (0.62 in.)	8.2±1.2 mm (0.244 in.)	16.6 mm (0.645 in.)	1.4 mm (0.055 in.)		802B-SSAR2XSX

Wiring

1	2	3
⊕	⊕	⊕
Com	N.O.	N.C.

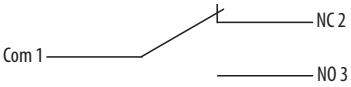

Approximate Dimensions

Dimensions are shown in mm (in.). Dimensions are not intended to be used for installation purposes.

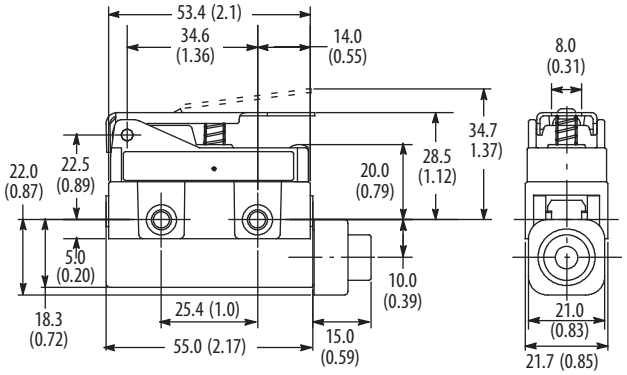

802B-SSAH1XSX

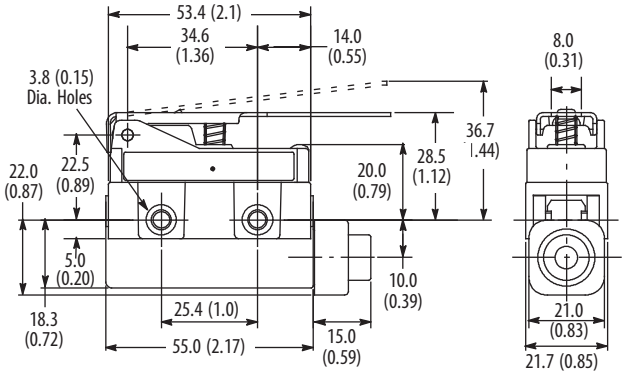

802B-SAHXSX

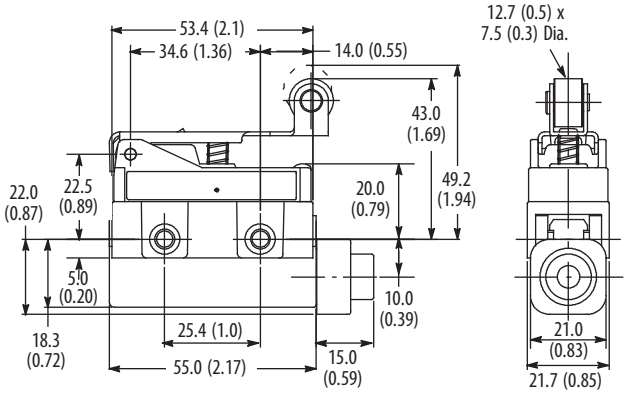

802B-SPAR1XSX

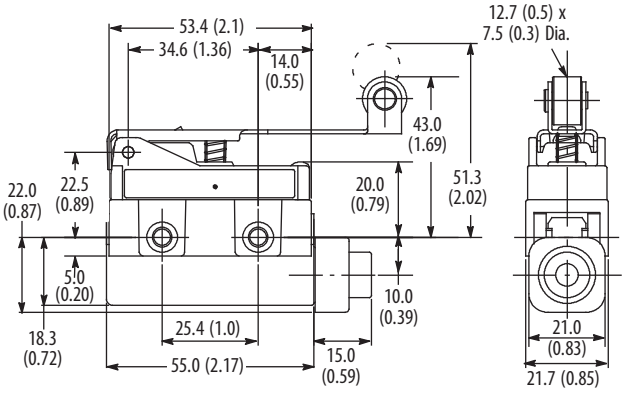

802B-SSARXSX

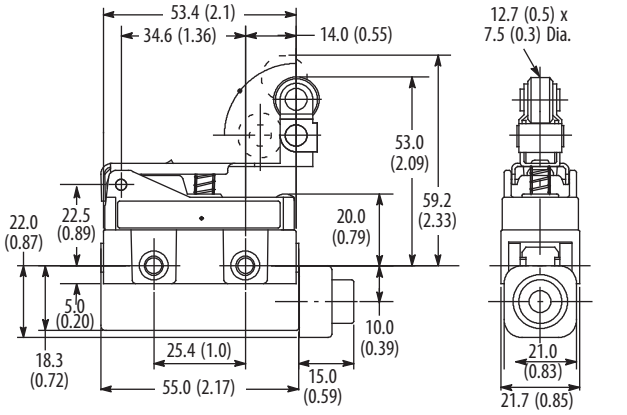

802B-SSAR3XSX

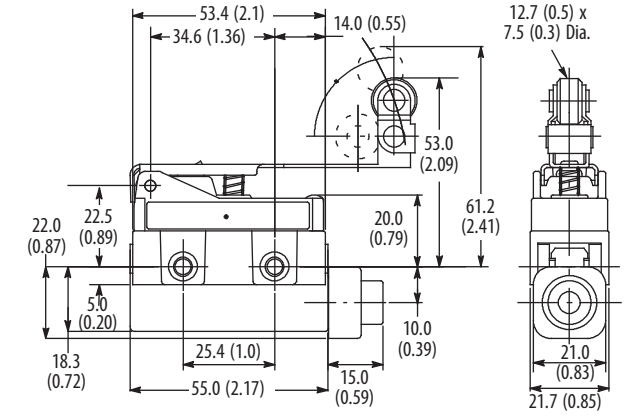

802B-SSAR2XSX

440P 22 mm Compact Metal Safety Limit Switches

440P 22 mm IEC style metal safety limit switches have the following features:

- Rugged die cast enclosure
- Positive operation, forced disconnection of contacts (direct opening action)
- Snap-acting contact actuation
- Contacts 1 N.C. + 1 N.O.
- Prewired 2 m (6.6 ft) cable, bottom, or side exit

Specifications

Attribute	Value
Safety Ratings	
Standards	EN 954-1, ISO 13849-1, IEC/EN 60204-1, NFPA 79, EN 1088, ISO 14119, IEC/EN 60947-5-1, ANSI B11.19, AS 4024.1
Safety classification	Cat.1 Device per EN 954-1 Dual channel limit switch suitable for Cat. 3 or 4 systems when ganged together
Certifications	cULus Listed, TÜV, and CE Marked for all applicable directives
Outputs	
Safety contacts (1)	1 N.C. snap-acting, 2 N.C. slow-acting
Auxiliary Contacts	1 N.O. snap-acting
Thermal Current I_{th}	10 A
Rated Insulation Voltage	300V AC
Contact Rating	

Maximum AC Contact Rating Per Pole (2)

NEMA Rating Designation	Voltage, Max	Amperes		Continuous Carrying Current [A]	Volt Amperes	
		Make	Break		Make	Break
AC15/B300	120	30	3	5	3600	360
	240	15	1.5	5	3600	360
Maximum DC Contact Rating Per Pole (2)						
DC13/Q300	240	0.27	0.27	2.5	69	69

Attribute	Value
Operating Characteristics	
Actuation Speed	250 mm/s, max
Actuation Speed	100 mm/min
Actuation Frequency	6000 ops/hr, max
Mechanical Life	1 x 10^7 operations with no electrical load

Attribute	Value
Environmental	
Enclosure type rating	Type 1, IP65, IP66, IP67, and IP69K (preleaded versions)
Operating temperature	2...70 °C (35.6...158 °F)
Pollution degree	3
Physical Characteristics	
Material	• Housing: Die-cast alloy • Actuator: Various polymers and metals
Mounting	2 x M4, any position
Vibration	IEC 68-2-6 (10...55 Hz, 0.35 mm amplitude)
Shock	IEC 68-2-7 (30 Gn 3 pulses per axis)
Color	Red body/black head

(1) The safety contacts are described as normally closed (N.C.), for example, with the guard closed, the actuator in place (where relevant), and the machine able to start.
(2) Maximum for:

4-pin Male Micro M12 Connectors (D4 suffix)	
AC	**DC**
30V, 3 A	30V, 3 A
5-pin Male Micro M12 Connectors (D5 suffix)	
AC	**DC**
60V, 3 A	60V, 3 A

Product Selection

Operator Type	Contact			Max Force/ Torque to Operate	Contact Opening Characteristics	Cat. No.			
	Safety	Aux.	Type		□ Open ■ Closed ⊖ Positive Opening Point	2 m (6.5 ft) Bottom Cable Style	2 m (6.5 ft) Side Cable Style	4-pin Micro QD Style	5-pin Micro QD Style
Roller Plunger	1 N.C.	1 N.O.	Snap acting	10 N (2.25 lb)	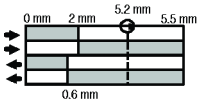	440P-ARPS11C	440P-ARPS11CS	440P-ARPS11D4	440P-ARPS11D5
	2 N.C.	–	–		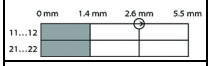	440P-ARPB02C	440P-ARPB02CS	440P-ARPB02D4	440P-ARPB02D5
Roller Plunger Panel Mount	1 N.C.	1 N.O.	Snap acting		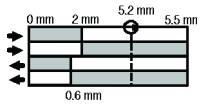	440P-ARP1S11C	440P-ARP1S11CS	–	440P-ARP1S11D5
Dome Plunger	1 N.C.	1 N.O.	Snap acting			440P-ADPS11C	440P-ADPS11CS	440P-ADPS11D4	440P-ADPS11D5
	2 N.C.	–	–		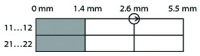	440P-ADPB02C	440P-ADPB02CS	440P-ADPB02D4	440P-ADPB02D5
Dome Plunger Panel Mount	1 N.C.	1 N.O.	Snap acting			440P-ADP1S11C	440P-ADP1S11CS	–	440P-ADP1S11D5
Cross Roller Plunger	1 N.C.	1 N.O.	Snap acting		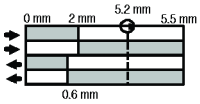	440P-ACRS11C	440P-ACRS11CS	440P-ACRS11D4	440P-ACRS11D5
Cross Roller Plunger Panel Mount	1 N.C.	1 N.O.	Snap acting			440P-ACR1S11C	440P-ACR1S11CS	–	440P-ACR1S11D5
Short Lever Wide Roller	1 N.C.	1 N.O.	Snap acting	0.2 N•m (1.77 lb•in)	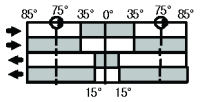	440P-AWLS11C	440P-AWLS11CS	440P-AWLS11D4	440P-AWLS11D5

Operator Type	Contact			Max Force/ Torque to Operate	Contact Opening Characteristics	Cat. No.			
	Safety	Aux.	Type		□Open ■Closed ⊖ Positive Opening Point	2 m (6.5 ft) Bottom Cable Style	2 m (6.5 ft) Side Cable Style	4-pin Micro QD Style	5-pin Micro QD Style
Short Lever Nylon Roller	1 N.C.	1 N.O.	Snap acting	0.2 N•m (1.77 lb•in)	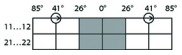	440P-ASLS11C	440P-ASLS11CS	440P-ASLS11D4	440P-ASLS11D5
	2 N.C.	–	–			440P-ASLB02C	440P-ASLB02CS	440P-ASLB02D4	440P-ASLB02D5
Adj. Lever Nylon Roller	1 N.C.	1 N.O.	Snap acting		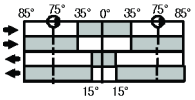	440P-AALS11C	440P-AALS11CS	440P-AALS11D4	440P-AALS11D5
Adj. Lever Metal Roller	1 N.C.	1 N.O.	Snap acting			440P-AA1LS11C	440P-AA1LS11CS	440P-AA1LS11D4	440P-AA1LS11D5
	2 N.C.	–	–		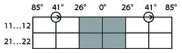	440P-AA1LB02C	440P-AA1LB02CS	440P-AA1LB02D4	440P-AA1LB02D5

Wiring Diagram

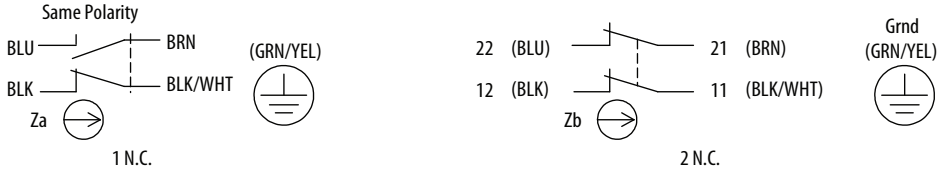

Approximate Dimensions

Dimensions are shown in mm (in.). Dimensions are not intended to be used for installation purposes.

Nonpanel Mount

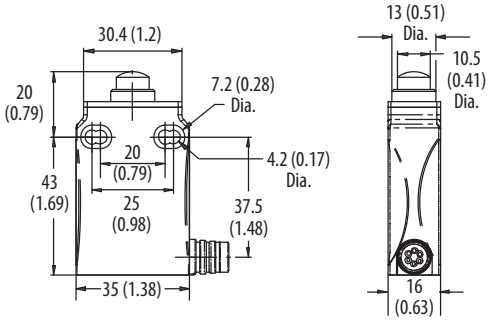

Dome Plunger

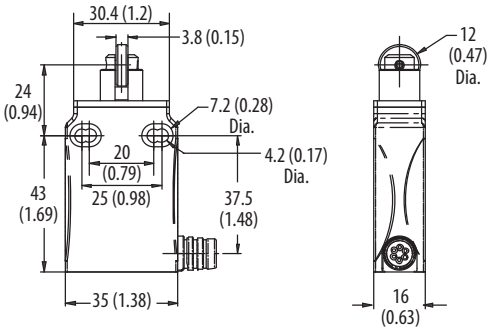

Cross Roller Plunger

Dimensions are shown in mm (in.). Dimensions are not intended to be used for installation purposes.

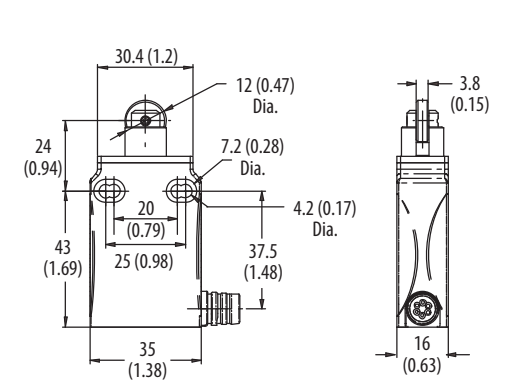

Roller Plunger

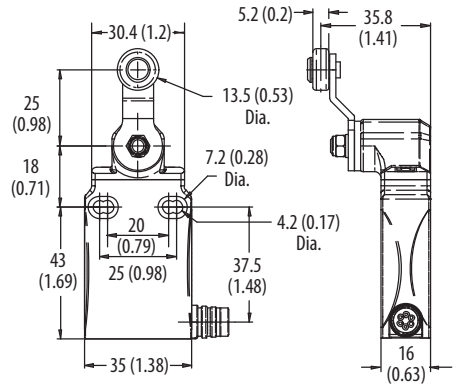

Lever Type

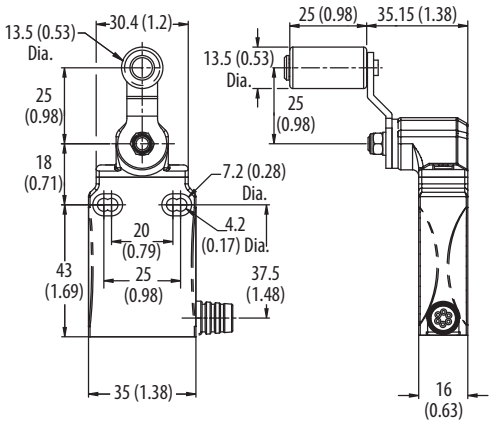

Wide Roller Plunger

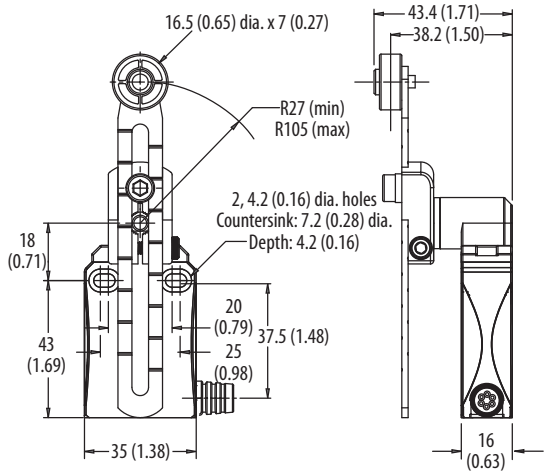

Adjustable Lever Type

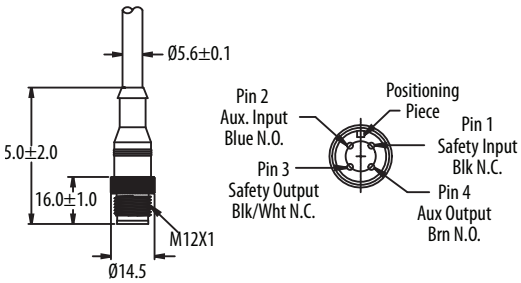

4-pin Micro QD

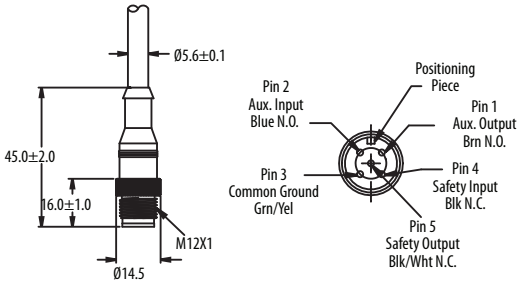

5-pin Micro QD

IMPORTANT Only nonpanel mount pre-leaded side-out models are shown. The body dimensions for the panel mount models and the pre-leaded bottom-out, and 4-/5-pin micro connector that is mounted on a 152.4 mm (6 in.) pigtail models are identical. For other dimensional drawings, see the installation instructions.

- Side cable style shows strain relief only. Units include a 2 m (6.56 ft) integral cable.
- Bottom cable style units have the same dimensions as the side cable style.
- The panel mount clearance hole is 13 mm (0.51 in.)

Counter Sinkhole [mm (in.)]

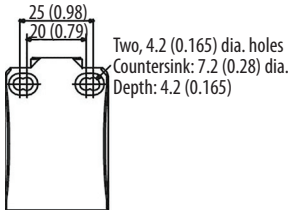

Dimensions are shown in mm (in.). Dimensions are not intended to be used for installation purposes.

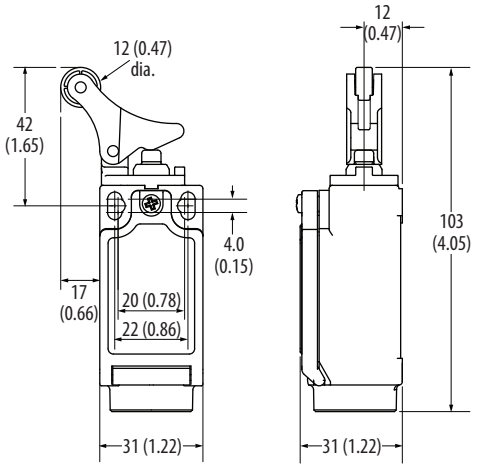

Offset Hinge

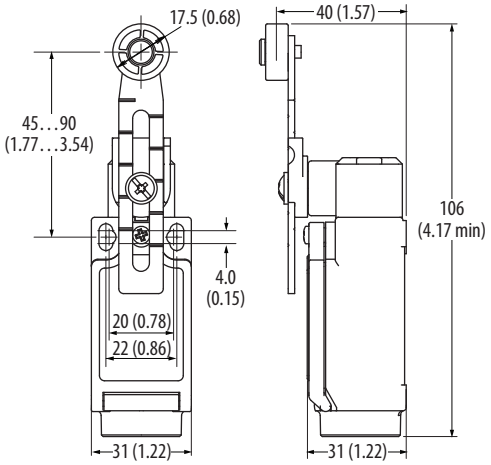

Adjustable Lever

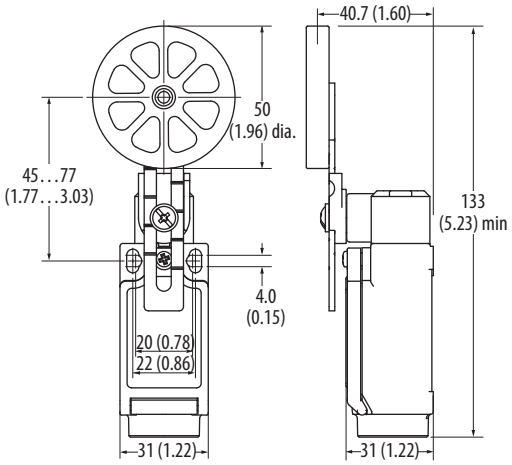

Rubber Roller

440P 22 mm Plastic Safety Limit Switches

Specifications

Attribute		Value			
Safety Ratings (1)					
Standards		EN 954-1, ISO 13849-1, IEC/EN 60204-1, NFPA 79, EN 1088, ISO 14119, IEC/ EN 60947-5-1, ANSI B11.19, AS 4024.1			
Safety Classification		Cat. 1 Device per EN 954-1 Dual channel limit switch suitable for Cat. 3 or 4 systems and used with a safety monitoring device			
Certifications		cULus Listed, TÜV, CCC, and CE Marked for all applicable directives			
Outputs					
Safety Contacts (2)		1 N.C. snap acting, 2 N.C. or 3 N.C. slow acting			
Auxiliary Contacts		1 N.O. (except 3 N.C. versions)			
Thermal Current I_{Ith}		10 A			
Rated Insulation Voltage		600V AC			
Switching Current @ Voltage		25 mA @ 5V DC, min			
Utilization Category		Contact Specification (3)			
A600/AC-15	(Ue)	600V	500V	240V	120V
	(Ie)	1.2 A	1.4 A	3.0 A	6.0 A
N600/DC-13	(Ue)	600V	500V	250V	125V
	(Ie)	0.4 A	0.55 A	1.1 A	2.2 A
Operating Characteristics					
Actuation Speed		250 mm/s, max			
Actuation Speed		100 mm/min			
Actuation Frequency		6000 operation per hour, max			
Mechanical Life		1 x 10^7 operations with no electrical load			
Environmental					
Enclosure Type Rating		IP66			
Operating Temperature		-25...+65 °C (-13...+149 °F)			
Pollution Degree		3			
Physical Characteristics					
Housing Material		UL Approved glass-filled polybutylene terephthalate			
Actuator Material		Various polymers and metals			
Mounting		2 x M4, Any position			
Vibration		IEC 68-2-6 (10...55 Hz, 0.35 mm amplitude)			
Shock		IEC 68-2-7 (30 Gn 3 pulses per axis)			
Conduit Entry		M20 or 1/2 inch NPT			
Color		Red			

(1) Usable for ISO 13849-1:2006 and IEC 62061. Data other than B10d is based on:
- Usage rate of 1op/10 mins., 24 hrs/day, 360 days/year, which represents 51,840 operations per year
- Mission time/Proof test interval of 38 years

(2) The safety contacts are described as normally closed (N.C.) that is, with the guard closed, actuator in place (where relevant) and the machine able to be started.

(3) Maximum for:

Two-Circuit D4 4-Pin Micro Connector	
AC	**DC**
250V, 2.5 A	250V, 2.5 A
Three-Circuit R6 6-Pin Micro Connector	
AC	**DC**
30V, 2 A	30V, 2 A

Product Selection

Description	Contact			Typical Force/ Torque to Operate	Contact Opening Characteristics □ Open ■ Closed ⊖ Positive Opening Point	Cat. No.		
	Safety	Auxiliary	Type			1/2 in. NPT Conduit	M20 Conduit	Quick Disconnect (1)
 Roller Plunger	1 N.C.	1 N.O.	Snap acting	5 N	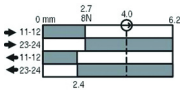	440P-CRPS11E	440P-CRPS11B	440P-CRPS11D4
	2 N.C.	1 N.O.	BBM	6 N	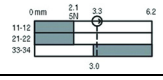	440P-CRPB12E	440P-CRPB12B	440P-CRPB12R6
	3 N.C.	—	—	5 N	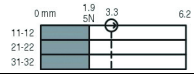	440P-CRPB03E	440P-CRPB03B	440P-CRPB03R6
	2 N.C.	1 N.O.	MBB	6 N	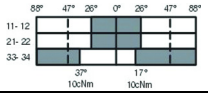	440P-CRPM12E	440P-CRPM12B	440P-CRPM12R6
 Dome Plunger	1 N.C.	1 N.O.	Snap acting	5 N	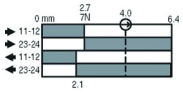	440P-CDPS11E	440P-CDPS11B	440P-CDPS11D4
	2 N.C.	1 N.O.	BBM	6 N	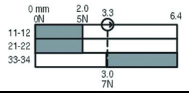	440P-CDPB12E	440P-CDPB12B	440P-CDPB12R6
	3 N.C.	—	—	5 N	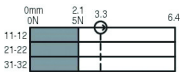	440P-CDPB03E	440P-CDPB03B	440P-CDPB03R6
	2 N.C.	1 N.O.	MBB	6 N	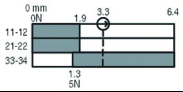	440P-CDPM12E	440P-CDPM12B	440P-CDPM12R6
 Hinge Lever	1 N.C.	1 N.O.	Snap Acting	5 N	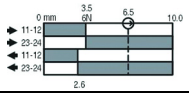	440P-CHLS11E	440P-CHLS11B	440P-CHLS11D4
	2 N.C.	1 N.O.	BBM	6 N	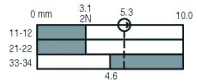	440P-CHLB12E	440P-CHLB12B	440P-CHLB12R6
	3 N.C.	—	—	5 N		440P-CHLB03E	440P-CHLB03B	440P-CHLB03R6
	2 N.C.	1 N.O.	MBB	6 N	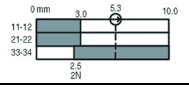	440P-CHLM12E	440P-CHLM12B	440P-CHLM12R6
Recommended standard cordset, 2 m (6.6 ft), 4-pin, DC Micro (M12) connector.								889D-F4AC-2
Recommended standard cordset, 2 m (6.6 ft), 6-pin, AC Micro (M12) connector.								889R-F6ACA-2

(1) D4 suffix uses a 4-pin DC Micro (M12) connector
R6 suffix uses a 6-pin AC Micro (dual keyway) connector

Description	Contact			Typical Force/ Torque to Operate	Contact Opening Characteristics □Open ■Closed ⊖ Positive Opening Point	Cat. No.		
	Safety	Auxiliary	Type			1/2 in. NPT Conduit	M20 Conduit	Quick Disconnect (1)
 Short Lever Plastic Roller	1 N.C.	1 N.O.	Snap acting	0.15 N•m	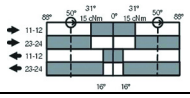	440P-CSLS11E	440P-CSLS11B	440P-CSLS11D4
	2 N.C.	1 N.O.	BBM	0.14 N•m	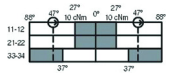	440P-CSLB12E	440P-CSLB12B	440P-CSLB12R6
	3 N.C.	—	—	0.14 N•m	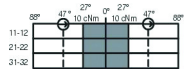	440P-CSLB03E	440P-CSLB03B	440P-CSLB03R6
	2 N.C.	1 N.O.	MBB	0.14 N•m	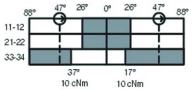	440P-CSLM12E	440P-CSLM12B	440P-CSLM12R6
 Short Lever Metal Roller	1 N.C.	1 N.O.	Snap acting	0.15 N•m	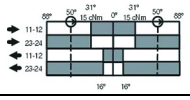	440P-CMHS11E	440P-CMHS11B	440P-CMHS11D4
	2 N.C.	1 N.O.	BBM	0.14 N•m	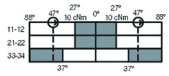	440P-CMHB12E	440P-CMHB12B	440P-CMHB12R6
	3 N.C.	—	—	0.14 N•m	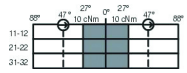	440P-CMHB03E	440P-CMHB03B	440P-CMHB03R6
	2 N.C.	1 N.O.	MBB	0.14 N•m	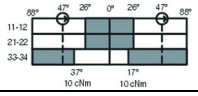	440P-CMHM12E	440P-CMHM12B	440P-CMHM12R6
 Offset Hinge	1 N.C.	1 N.O.	Snap acting	5 N	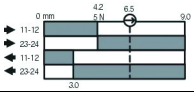	440P-C0HS11E	440P-C0HS11B	440P-C0HS11D4
	2 N.C.	1 N.O.	BBM	6 N	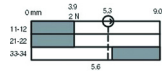	440P-C0HB12E	440P-C0HB12B	440P-C0HB12R6
	3 N.C.	—	—	5 N	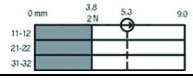	440P-C0HB03E	440P-C0HB03B	440P-C0HB03R6
	2 N.C.	1 N.O.	MBB	6 N	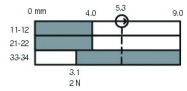	440P-C0HM12E	440P-C0HM12B	440P-C0HM12R6
Recommended standard cordset, 2 m (6.6 ft), 4-pin, DC Micro (M12) connector.								889D-F4AC-2
Recommended standard cordset, 2 m (6.6 ft), 6-pin, AC Micro (M12) connector.								889R-F6ACA-2

(1) D4 suffix uses a 4-pin DC Micro (M12) connector
R6 suffix uses a 6-pin AC Micro (dual keyway) connector

Description	Contact			Typical Force/ Torque to Operate	Contact Opening Characteristics □Open ■Closed ⊖ Positive Opening Point	Cat. No.		
	Safety	Auxiliary	Type			1/2 in. NPT Conduit	M20 Conduit	Quick Disconnect (1)
 Adjustable Lever (2)	1 N.C.	1 N.O.	Snap acting	0.15 N•m	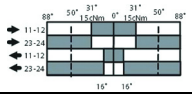	440P-CALS11E	440P-CALS11B	440P-CALS11D4
	2 N.C.	1 N.O.	BBM	0.14 N•m	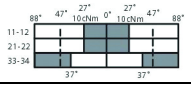	440P-CALB12E	440P-CALB12B	440P-CALB12R6
	3 N.C.	–	–	0.14 N•m	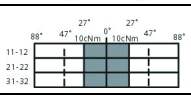	440P-CALB03E	440P-CALB03B	440P-CALB03R6
	2 N.C.	1 N.O.	MBB	0.14 N•m	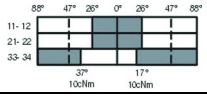	440P-CALM12E	440P-CALM12B	440P-CALM12R6
 Rubber Roller (2)	1 N.C.	1 N.O.	Snap acting	0.15 N•m	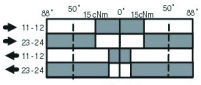	440P-CRRS11E	440P-CRRS11B	440P-CRRS11D4
	2 N.C.	1 N.O.	BBM	0.14 N•m	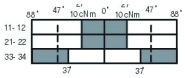	440P-CRRB12E	440P-CRRB12B	440P-CRRB12R6
	3 N.C.	–	–	0.14 N•m	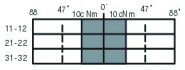	440P-CRRB03E	440P-CRRB03B	440P-CRRB03R6
	2 N.C.	1 N.O.	MBB	0.14 N•m	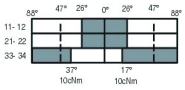	440P-CRRM12E	440P-CRRM12B	440P-CRRM12R6
Recommended standard cordset, 2 m (6.6 ft), 4-pin, DC Micro (M12) connector.								889D-F4AC-2
Recommended standard cordset, 2 m (6.6 ft), 6-pin, AC Micro (M12) connector.								889R-F6ACA-2

(1) D4 suffix uses a 4-pin DC Micro (M12) connector
R6 suffix uses a 6-pin AC Micro (dual keyway) connector
(2) Not positive opening.

Wiring

IMPORTANT See Product Selection tables for positive opening circuits.

Table 39 - Two-circuit Type D4 4-pin Micro Connector

Connector Pinout	1 N.C. + 1 N.O.		
	Pin	Terminal	Contact
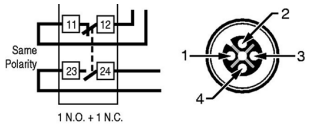	1	11	N.C.
	3	12	
	2	23	N.O.
	4	24	

Table 40 - Connector Ratings

	Ratings, Max		Applicable Standards
	AC	DC	
4-pin Micro (M12)	250V, 2.5 A	250V, 2.5 A	IEC 61076-2-101:2003
6-pin Micro (M12)	30V, 2 A	30V, 2 A	

Table 41 - Three-circuit Type R6 6-pin Micro Connector

Connector Pinout	Pin	3 N.C.		2 N.C. + 1 N.O.	
		Terminal	Contact	Terminal	Contact
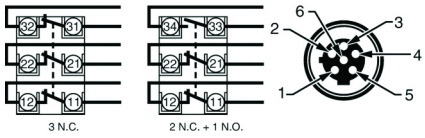	1	11	N.C.	11	N.C.
	5	12		12	
	2	21	N.C.	21	N.C.
	6	22		22	
	3	33	N.O.	31	N.C.
	4	34		32	

Approximate Dimensions

Dimensions are shown in mm (in.). Dimensions are not intended to be used for installation purposes.

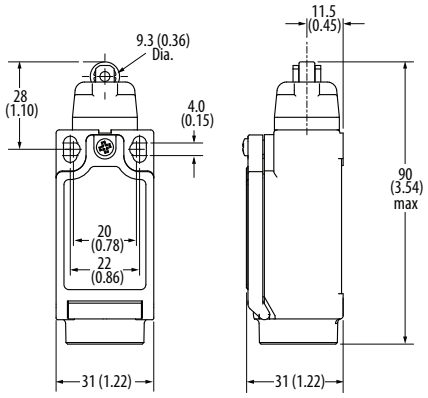

Roller Plunger

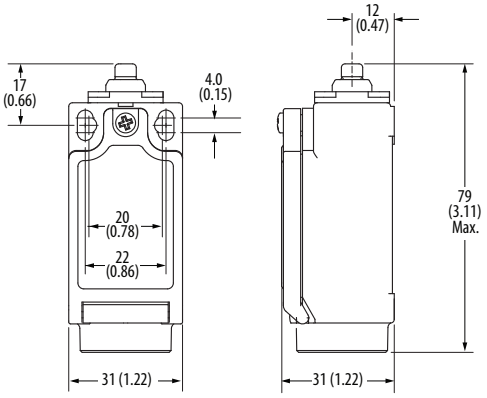

Dome Plunger

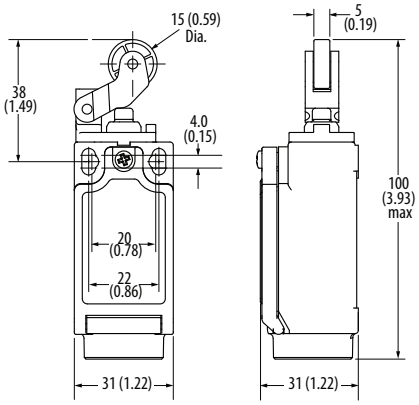

Hinge Lever

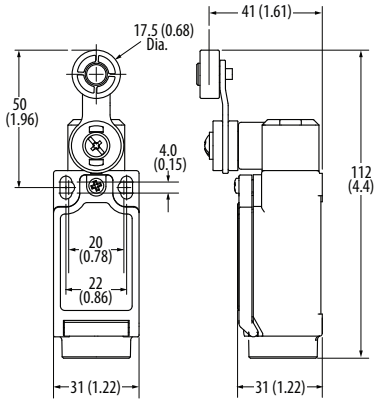

Short Lever
(Metal and Plastic Roller)

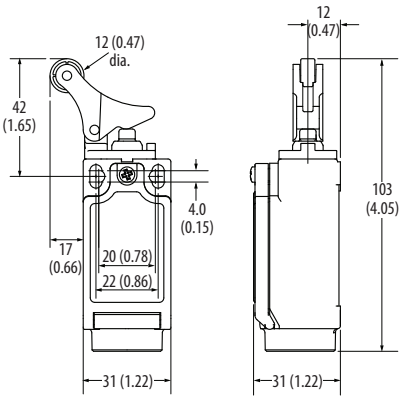

Offset Hinge

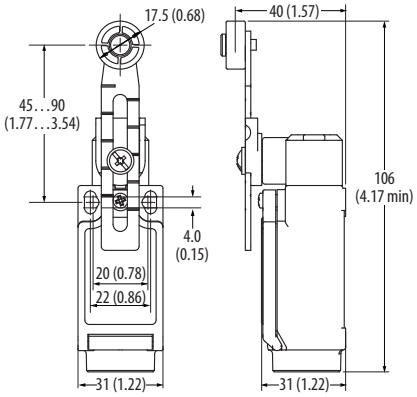

Adjustable Lever

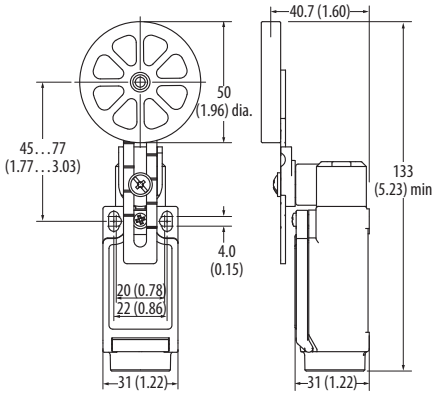

Offset Hinge

440P 30 mm Metal Safety Limit Switches

Specifications

Attribute		Value			
Safety Ratings					
Standards		EN954-1, ISO13849-1, IEC/EN60204-1, NFPA79, EN1088, ISO14119, IEC/ EN60947-5-1, ANSI B11.19, AS4024.1			
Safety Classification		Cat. 1 Device per EN954-1 Dual-channel limit switch suitable for Cat. 3 or 4 systems and used with a safety monitoring device			
Certifications		cULus Listed, TÜV, CE, and CCC Marked for all applicable directives			
Outputs					
Safety Contacts (1)		1 N.C. snap acting, 2 N.C., 3 N.C. or 4 N.C. slow acting			
Auxiliary Contacts		1 N.O. (with 2 N.C.)			
Thermal Current (I_{lth})		8 A			
Rated Insulation Voltage		600V AC			
Switching Current @ Voltage		25 mA @ 5V DC, min			
Utilization Category		**Contact Specification (2)**			
A600/AC-15	(Ue)	600V	500V	240V	120V
	(Ie)	1.2 A	1.4 A	3.0 A	6.0 A
N600/DC-13	(Ue)	600V	500V	250V	125V
	(Ie)	0.4 A	0.55 A	1.1 A	2.2 A
Operating Characteristics					
Actuation Speed		250 mm/s, max			
Actuation Speed		100 mm/min, min			
Actuation Frequency		6000 operations per hour, max			
Mechanical Life		1 x 10^7 operations with no electrical load			
Environmental					
Enclosure Type Rating		IP66			
Operating Temperature		-25...+80 °C (-13...+176 °F)			
Pollution Degree		3			
Physical Characteristics					
Housing Material		Die-cast alloy			
Actuator Material		Various polymers and metals			
Mounting		2 x M5, any position			
Vibration		IEC 68-2-6 (10...55 Hz, 0.35 amplitude)			
Shock		IEC 68-2-7 (30 Gn 3 pulses per axis)			
Conduit Entry		M20 or 1/2 in. NPT			
Color		Red			

(1) The safety contacts are described as normally closed (N.C.), for example, with the guard closed, actuator in place (where relevant) and the machine able to be started.
(2) Maximum for:

Two-Circuit N5 5-pin Mini Connector	
AC	**DC**
300V, 2.5 A	300V, 2.5 A
Four-Circuit M9 12-pin M23 Connector	
AC	**DC**
60V, 2.5 A	60V, 2.5 A

Product Selection

Description	Contact			Typical Force/ Torque to Operate	Contact Opening Characteristics	Cat. No.		
	Safety	Auxiliary	Type			1/2 in. NPT Conduit	M20 Conduit	Quick Disconnect (1)
Metal Roller Plunger	1 N.C.	1 N.O.	Snap acting	13 N	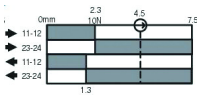	440P-MRPS11E	440P-MRPS11B	440P-MRPS11N5
	4 N.C.	–	–	11 N		440P-MRPB04E	440P-MRPB04B	440P-MRPB04M9
	3 N.C.	1 N.O.	BBM	11 N	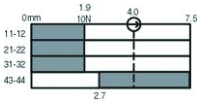	440P-MRPB13E	440P-MRPB13B	440P-MRPB13M9
	2 N.C.	2 N.O.	BBM	11 N	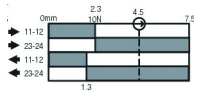	440P-MRPB22E	440P-MRPB22B	440P-MRPB22M9
Metal Dome Plunger	1 N.C.	1 N.O.	Snap acting	13 N	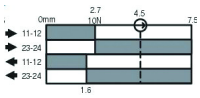	440P-MDPS11E	440P-MDPS11B	440P-MDPS11N5
	4 N.C.	–	–	11 N		440P-MDPB04E	440P-MDPB04B	440P-MDPB04M9
	3 N.C.	1 N.O.	BBM	11 N	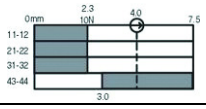	440P-MDPB13E	440P-MDPB13B	440P-MDPB13M9
	2 N.C.	2 N.O.	BBM	11 N	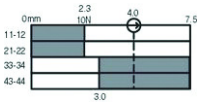	440P-MDPB22E	440P-MDPB22B	440P-MDPB22M9
Metal Short Lever	1 N.C.	1 N.O.	Snap acting	0.34 N•m	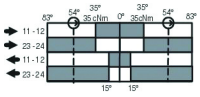	440P-MSLS11E	440P-MSLS11B	440P-MSLS11N5
	4 N.C.	–	–	0.20 N•m	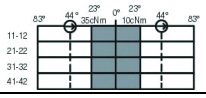	440P-MSLB04E	440P-MSLB04B	440P-MSLB04M9
	3 N.C.	1 N.O.	BBM	0.34 N•m	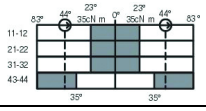	440P-MSLB13E	440P-MSLB13B	440P-MSLB13M9
	2 N.C.	2 N.O.	BBM	0.34 N•m	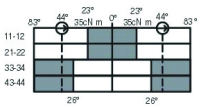	440P-MSLB22E	440P-MSLB22B	440P-MSLB22M9
Recommended standard cordset, 2 m (6.6 ft), 5-pin mini connector.								889N-F5AE-6F
Recommended standard cordset, 2 m (6.6 ft), 12-pin 9-wire.								889M-F12X9AE-2

(1) N5 = 5-pin mini connector
M9 = 12-pin M23 connector (use 9-wire)

Description	Contact			Typical Force/ Torque to Operate	Contact Opening Characteristics	Cat. No.		
	Safety	Auxiliary	Type			1/2 in. NPT Conduit	M20 Conduit	Quick Disconnect (1)
Metal Short Lever, Metal Roller	1 N.C.	1 N.O.	Snap acting	0.34 N•m	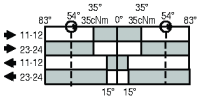	440P-MMHS11E	440P-MMHS11B	440P-MMHS11N5
	4 N.C.	–	–	0.20 N•m	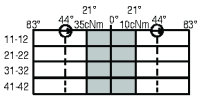	440P-MMHB04E	440P-MMHB04B	440P-MMHB04M9
	3 N.C.	1 N.O.	BBM	0.34 N•m	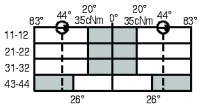	440P-MMHB13E	440P-MMHB13B	440P-MMHB13M9
	2 N.C.	2 N.O.	BBM	0.34 N•m	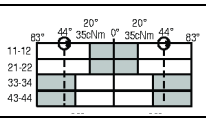	440P-MMHB22E	440P-MMHB22B	440P-MMHB22M9
Metal Adjustable Lever (2)	1 N.C.	1 N.O.	Snap acting	0.34 N•m	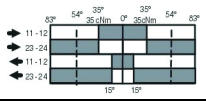	440P-MALS11E	440P-MALS11B	440P-MALS11N5
	4 N.C.	–	–	0.20 N•m	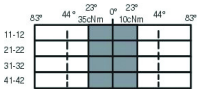	440P-MALB04E	440P-MALB04B	440P-MALB04M9
	3 N.C.	1 N.O.	BBM	0.34 N•m	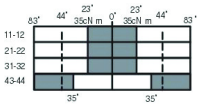	440P-MALB13E	440P-MALB13B	440P-MALB13M9
	2 N.C.	2 N.O.	BBM	0.34 N•m	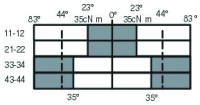	440P-MALB22E	440P-MALB22B	440P-MALB22M9
Metal Rod Lever (2)	1 N.C.	1 N.O.	Snap acting	0.34 N•m	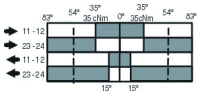	440P-MARS11E	440P-MARS11B	440P-MARS11N5
	4 N.C.	–	–	0.20 N•m	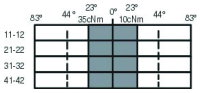	440P-MARB04E	440P-MARB04B	440P-MARB04M9
	3 N.C.	1 N.O.	BBM	0.34 N•m	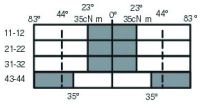	440P-MARB13E	440P-MARB13B	440P-MARB13M9
	2 N.C.	2 N.O.	BBM	0.34 N•m	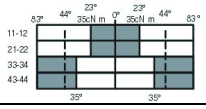	440P-MARB22E	440P-MARB22B	440P-MARB22M9
Recommended standard cordset, 2 m (6.6 ft), 5-pin mini connector.								889N-F5AE-6F
Recommended standard cordset, 2 m (6.6 ft), 12-pin 9-wire.								889M-F12X9AE-2

(1) N5 = 5-pin mini connector
M9 = 12-pin M23 connector (use 9-wire)
(2) Not positive opening.

Description	Contact			Typical Force/ Torque to Operate	Contact Opening Characteristics	Cat. No.		
	Safety	Auxiliary	Type			1/2 in. NPT Conduit	M20 Conduit	Quick Disconnect (1)
Metal Spring Rod (2)	1 N.C.	1 N.O.	Snap acting	0.20 N•m (1.77 lb•in)	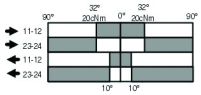	440P-MSRS11E	440P-MSRS11B	440P-MSRS11N5
	4 N.C.	–	–	0.20 N•m (1.77 lb•in)	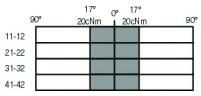	440P-MSRB04E	440P-MSRB04B	440P-MSRB04M9
	3 N.C.	1 N.O.	BBM	0.20 N•m (1.77 lb•in)	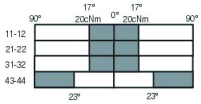	440P-MSRB13E	440P-MSRB13B	440P-MSRB13M9
	2 N.C.	2 N.O.	BBM	0.20 N•m (1.77 lb•in)	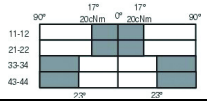	440P-MSRB22E	440P-MSRB22B	440P-MSRB22M9
Telescopic Arm (2)	1 N.C.	1 N.O.	Snap acting	0.20 N•m (1.77 lb•in)	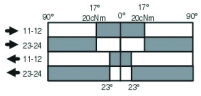	440P-MTAS11E	440P-MTAS11B	440P-MTAS11N5
	4 N.C.	–	–	0.20 N•m (1.77 lb•in)	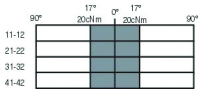	440P-MTAB04E	440P-MTAB04B	440P-MTAB04M9
	3 N.C.	1 N.O.	BBM	0.20 N•m (1.77 lb•in)	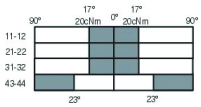	440P-MTAB13E	440P-MTAB13B	440P-MTAB13M9
	2 N.C.	2 N.O.	BBM	0.20 N•m (1.77 lb•in)	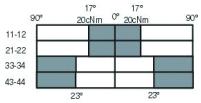	440P-MTAB22E	440P-MTAB22B	440P-MTAB22M9
Large Rubber Roller (2)	1 N.C.	1 N.O.	Snap acting	0.20 N•m (1.77 lb•in)	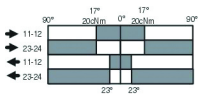	440P-MRRS11E	440P-MRRS11B	440P-MRRS11N5
	4 N.C.	–	–	0.20 N•m (1.77 lb•in)	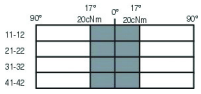	440P-MRRB04E	440P-MRRB04B	440P-MRRB04M9
	3 N.C.	1 N.O.	BBM	0.34 N•m (3.01 lb•in)	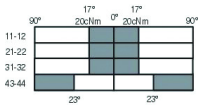	440P-MRRB13E	440P-MRRB13B	440P-MRRB13M9
	2 N.C.	2 N.O.	BBM	0.34 N•m (3.01 lb•in)	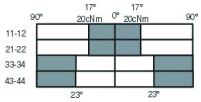	440P-MRRB22E	440P-MRRB22B	440P-MRRB22M9
Recommended standard cordset, 2 m (6.6 ft), 5-pin mini connector.								889N-F5AE-6F
Recommended standard cordset, 2 m (6.6 ft), 12-pin 9-wire.								889M-F12X9AE-2

(1) N5 = 5-pin mini connector
M9 = 12-pin M23 connector (use 9-wire)
(2) Not positive opening.

Typical Wiring Diagram

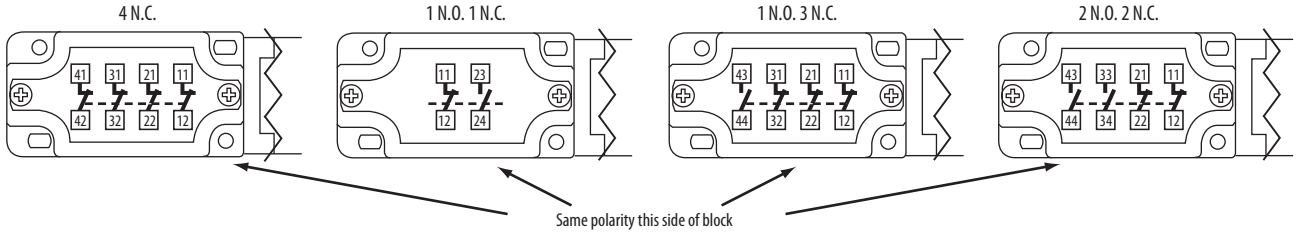

Figure 6 - N5 Connector 2-circuit 5-pin Mini Connector

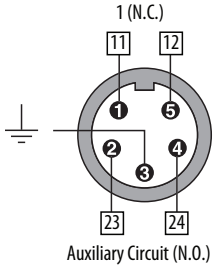

Table 42 - Connector Ratings

Description	Max Ratings		Applicable Standards
	AC	DC	
5-pin Mini (M12)	300V, 2.5 A	300V, 2.5 A	IEC 61076-2-101:2003
12-pin (M23)	60V, 2.5 A	60V, 2.5 A	

Table 43 - M9 12-pin M23 Connector

Connector Pinout		4 N.C.		3 N.C. 1 N.O.		2 N.C. 2 N.O.	
		Terminal	Contact	Terminal	Contact	Terminal	Contact
	1	11	N.C.	11	N.C.	11	N.C.
	3	12		12		12	
	4	21	N.C.	21	N.C.	21	N.C.
	6	22		22		22	
	7	31	N.C.	31	N.C.	33	N.O.
	8	32		32		34	
	9	41	N.C.	43	N.O.	43	N.O.
	10	42		44		44	
	12	Ground					

Approximate Dimensions

Dimensions are shown in mm (in.). Dimensions are not intended to be used for installation purposes.

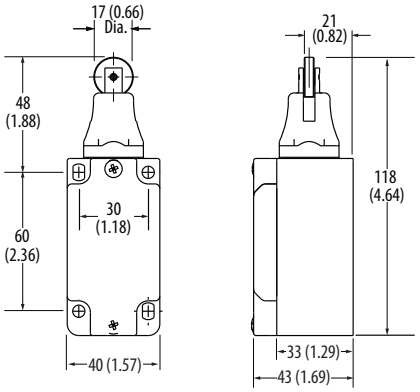

Roller Plunger

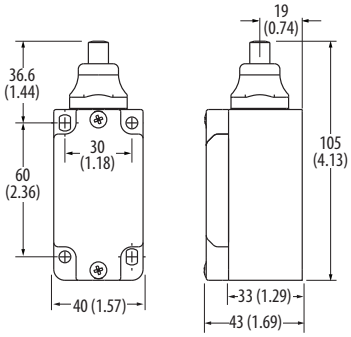

Dome Plunger

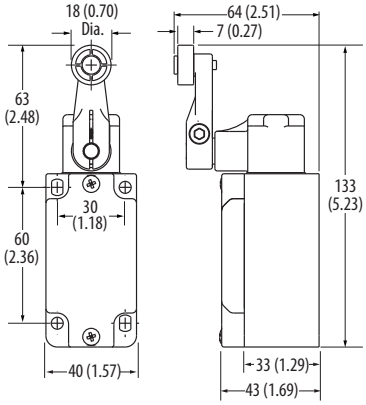

Short Lever
(Metal and Plastic Roller)

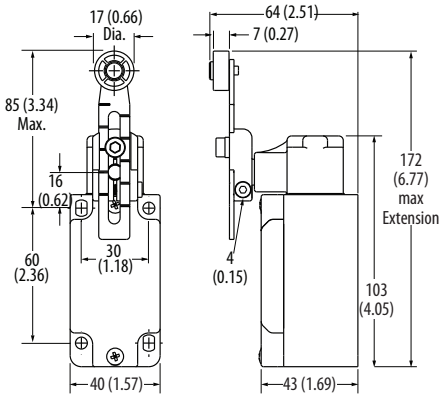

Adjustable Lever

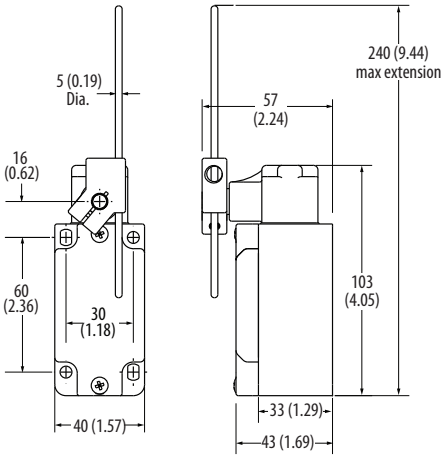

Rod Lever

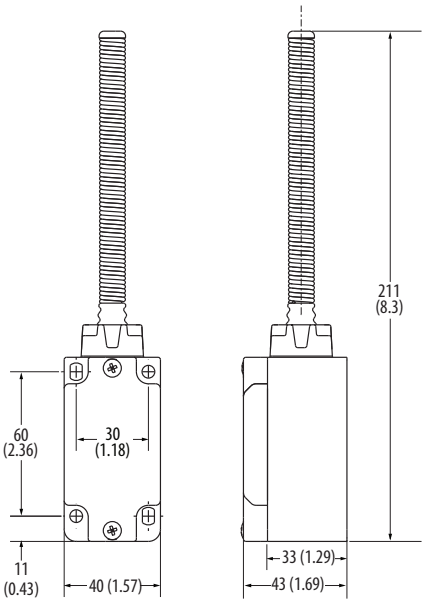

Adjustable Lever

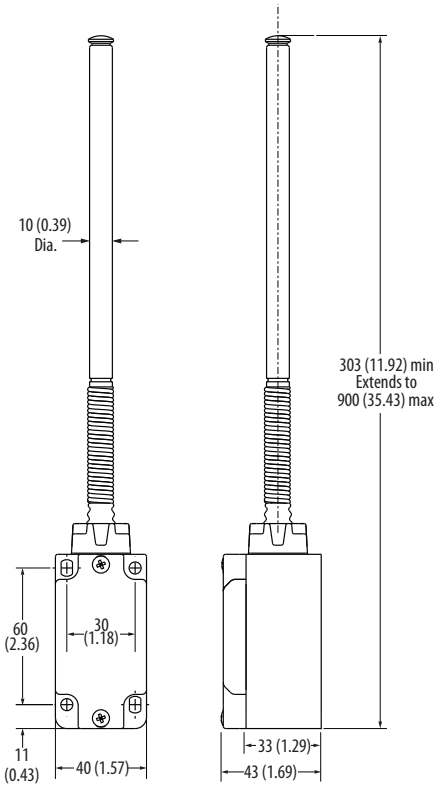

Rod Lever

440P 15 mm Plastic Safety Limit Switches

Specifications

Attribute		Value		
Safety Ratings				
Standards		EN 954-1, ISO 13849-1, IEC/EN 60204-1, NFPA 79, EN 1088, ISO 14119, IEC/ EN 60947-5-1, ANSI B11.19, AS 4024.1		
Safety Classification		Cat. 1 Device per EN954-1 Dual channel limit switch suitable for Cat. 3 or 4 systems		
Functional Safety Data (1)		B10d = > 2 x 10^6 operations at minimum load		
		PFH_D = > 3 x10^{-7} MTTFd = > 385 years Dual channel interlock may be suitable for Performance Levels PLe or PLd (according to ISO 13849-1:2006) and for use in SIL 2 or SIL 3 systems (according to IEC 62061) depending on application characteristics		
Certifications		CE Marked for all applicable directives and CSA NRTL/C		
Outputs				
Safety Contacts (2)		1 N.C. positive break		
Auxiliary Contacts		1 N.O.		
Thermal Current		10 A (I_{th})		
Rated Insulation Voltage		(Ui) 500V		
Switching Current @ Voltage		25 mA @ 5V DC, min		
Utilization Category				
AC-15	(Ue)	500V	250V	100V
	(Ie)	1 A	2 A	5 A
DC	(Ue)	250V	24V	
	(Ie)	0.5 A	2 A	
Operating Characteristics				
Actuation Speed		160 mm (6.29 in.)/s, max		
Actuation Speed		100 mm (3.93 in.)/min		
Actuator Travel		5 mm (0.20 in.), max		
Actuation Frequency		2 cycles/s, max		
Mechanical Life		10,000,000 operations		
Electrical Life		1,000,000 operations		
Mechanical Life		10,000,000 operations		
Environmental				
Enclosure Type Rating		IP30		
Operating Temperature		-25...+80 °C (-13...+176 °F)		
Pollution Degree		3		
Physical Characteristics				
Housing Material		UL Approved glass-filled PBT		
Actuator Material		Stainless steel		
Mounting		2 x M4 front or 2 x M3 top		
Vibration		10...55 Hz		
Shock		11 ms @ 30 g		
Conduit Entry		3x break-outs		
Color		Red		

(1) Usable for ISO 13849-1:2006 and IEC 62061. Data other than B10d is based on:
- Usage rate of 1op/10 min, 24 hrs/day, 360 days/year, which represents 51,840 operations per year
- Mission time/Proof test interval of 38 years

(2) The safety contacts are described as normally closed (N.C.), for instance, with the guard closed, actuator in place (where relevant) and the machine able to be started.

Product Selection

Actuator Type	Contact		Conduit	Type	Contact Action □ Open ■ Closed ⊖ Positive Opening Point	Cat. No.
Top Push Roller (roller parallel to switch front)	Slow break before make	1 N.O. & 1 N.C.	3x breakouts	Imp 1 (roller parallel to switch front)	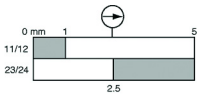	440P-M18001
Top Push Cross Roller (roller perpendicular to switch front)				Imp 2 (roller perpendicular to switch front)		440P-M18002

Typical Wiring Diagram

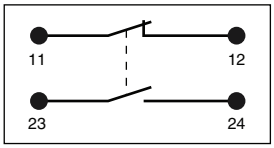

1 N.O. & 1 N.C.

Approximate Dimensions

Dimensions are shown in mm (in.). Dimensions are not intended to be used for installation purposes.

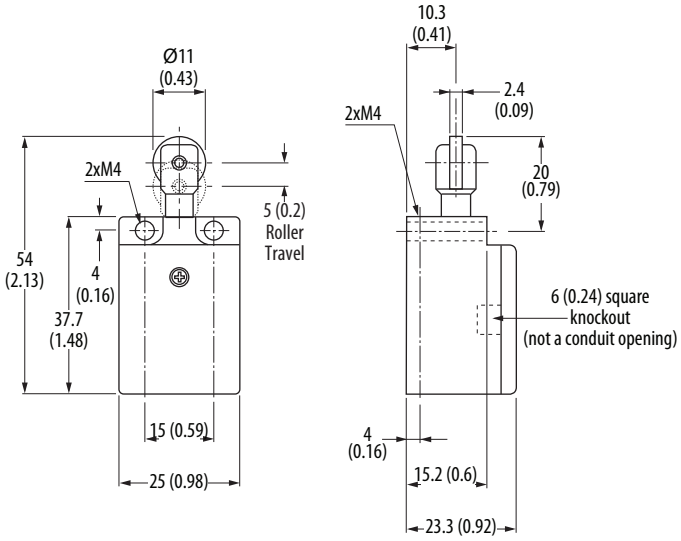

802K 30 mm Metal General Purpose Limit Switches

Specifications

Attribute		Value			
Certifications		cULus and CE Marked for all applicable directives			
Outputs					
Contacts		1 N.C. snap acting, 2 N.C. or 4 N.C. slow acting			
Auxiliary Contacts		1 N.O. (with 1 N.C.) or 2 N.O. (with 2 N.C.)			
Thermal Current (I_{Ith})		8 A			
Rated Insulation Voltage		600V AC			
Utilization Category		Contact Specification			
A600/AC-15	(Ue)	600V	500V	240V	120V
	(Ie)	1.2 A	1.4 A	3.0 A	6.0 A
N600/DC-13	(Ue)	600V	500V	250V	125V
	(Ie)	0.4 A	0.55 A	1.1 A	2.2 A
Operating Characteristics					
Actuation Speed, Max.		250 mm/s			
Actuation Speed, Min.		100 mm/min			
Actuation Frequency, Max.		6000 operations per hour			
Mechanical Life		1×10^7 operations with no electrical load			
Environmental					
Enclosure Type Rating		IP66			
Operating Temperature		-25...+65 °C (-13...+149 °F)			
Pollution Degree		3			
Physical Characteristics					
Housing Material		Die-cast alloy			
Actuator Material		Various polymers and metals			
Mounting		2 x M5, any position			
Vibration		IEC 68-2-6 (10...55 Hz, 0.35 amplitude)			
Shock		IEC 68-2-7 (30 Gn 3 pulses per axis)			
Conduit Entry		M20 or 1/2 inch NPT			
Color		Black			

Product Selection

Description	Contact			Typical Force/ Torque to Operate	Contact Opening Characteristics	Cat. No.	
	Safety	Auxiliary	Type			1/2 inch NPT Conduit	M20 Conduit
Metal Roller Plunger	1 N.C.	1 N.O.	Snap acting	13 N (2.9 lb)	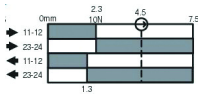	802K-MRPS11E	–
	2 N.C.	2 N.O.	BBM	11 N (2.5 lb)	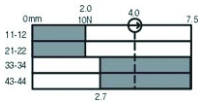	802K-MRPB22E	–
Metal Dome Plunger	1 N.C.	1 N.O.	Snap acting	13 N (2.9 lb)	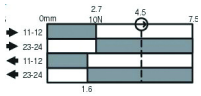	802K-MDPS11E	–
	2 N.C.	2 N.O.	BBM	11 N (2.5 lb)	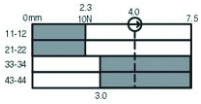	802K-MDPB22E	802K-MDPB22B
Metal Short Lever	1 N.C.	1 N.O.	Snap acting	0.34 N•m (3.01 lb•in)	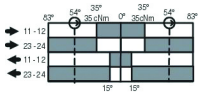	802K-MSLS11E	802K-MSLS11B
	4 N.C.	–	–	0.20 N•m (1.77 lb•in)	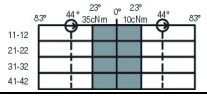	802K-MSLB04E	–
	2 N.C.	2 N.O.	BBM	0.34 N•m (3.01 lb•in)	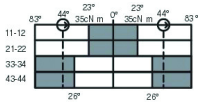	802K-MSLB22E	802K-MSLB22B
Metal Short Lever, Metal Roller	1 N.C.	1 N.O.	Snap acting	0.34 N•m (3.01 lb•in)	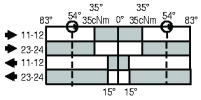	802K-MMHS11E	802K-MMHS11B
	2 N.C.	2 N.O.	BBM		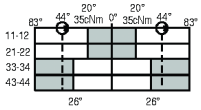	802K-MMHB22E	–
Recommended standard cordset, 2 m (6.6 ft), 5-pin mini connector.							889N-F5AE-6F
Recommended standard cordset, 2 m (6.6 ft), 12-pin 9-wire.							889M-F12X9AE-2

Description	Safety Contacts	Auxiliary Contacts	Contact Type	Typical Force/ Torque to Operate	Contact Opening Characteristics	Cat. No.	
						1/2 in. NPT Conduit	M20 Conduit
Metal Adjustable Lever	1 N.C.	1 N.O.	Snap Acting	0.34 N•m (3.01 lb•in)	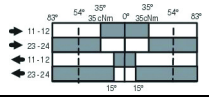	802K-MALS11E	802K-MALS11B
	2 N.C.	2 N.O.	BBM		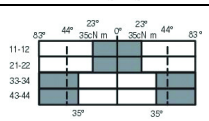	802K-MALB22E	802K-MALB22B
Metal Rod Lever	1 N.C.	1 N.O.	Snap Acting		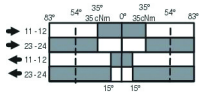	802K-MARS11E	–
Metal Spring Rod	1 N.C.	1 N.O.	Snap Acting	0.20 N•m (1.77 lb•in)	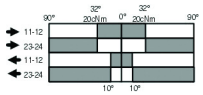	802K-MSRS11E	802K-MSRS11B
Recommended standard cordset, 2 m (6.6 ft), 5-pin mini connector.							889N-F5AE-6F
Recommended standard cordset, 2 m (6.6 ft), 12-pin 9-wire.							889M-F12X9AE-2

Typical Wiring Diagram

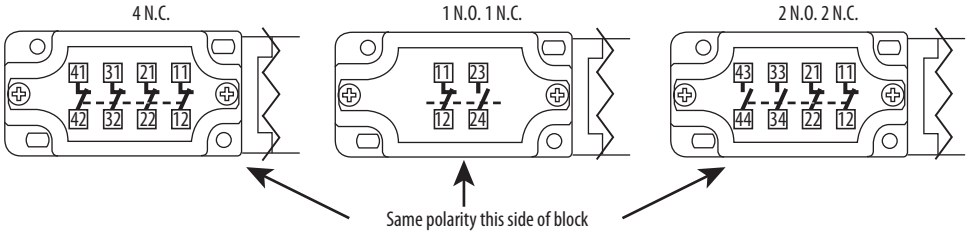

Approximate Dimensions

Dimensions are shown in mm (in.). Dimensions are not intended to be used for installation purposes.

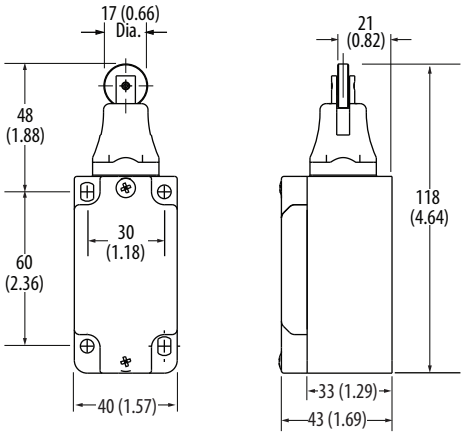

Roller Plunger

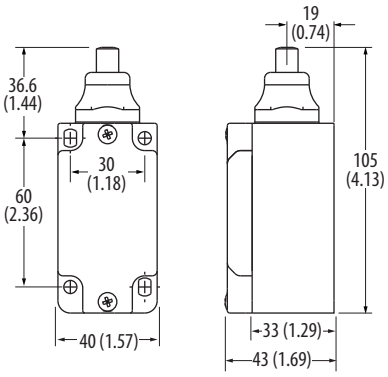

Dome Plunger

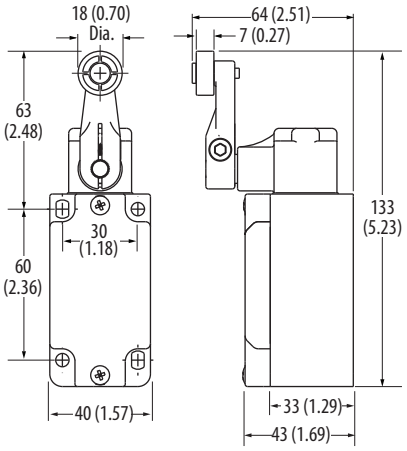

Short Lever
(Metal and Plastic Roller)

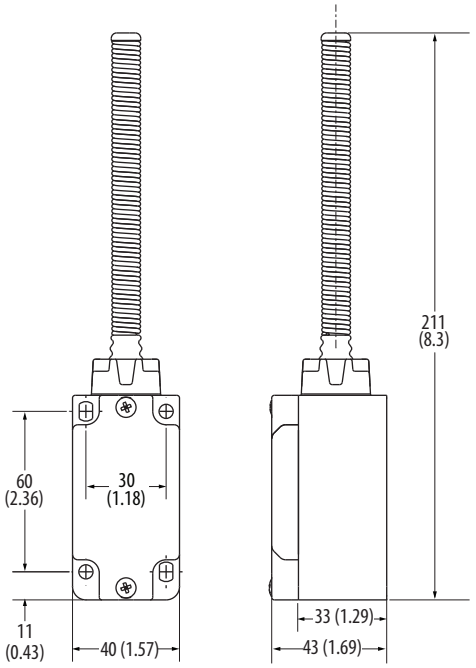

Spring Rod

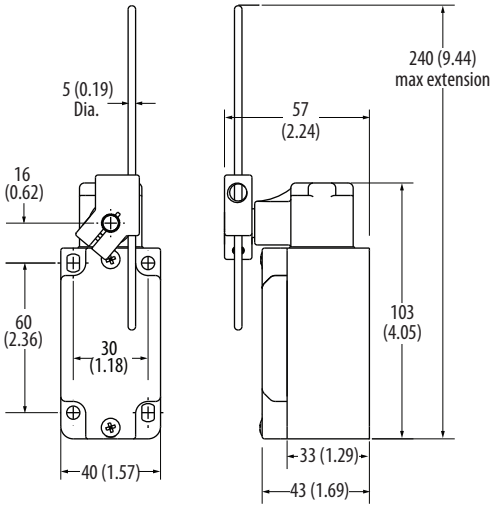

Rod Lever

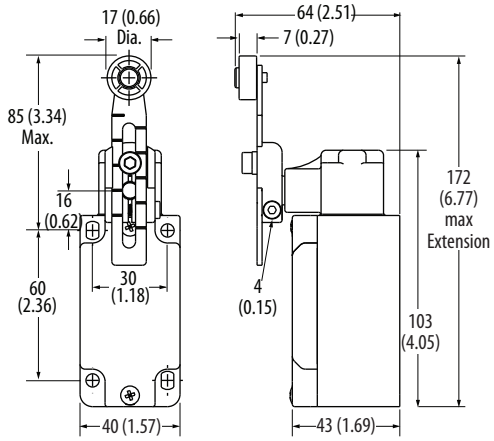

Adjustable Lever

Bulletin 802

IMPORTANT For use with 802M, 802MC, 802R, 802T, 802X, and 802XR

Roller Levers

Type	Roller			Cat. No.
	Material	Dia. [in.]	Width [in.]	
Non-adjustable Cast Lever 0.75 in. Radius	Metal	0.75	0.27	802T-W9A
Non-adjustable Cast Lever 1.5 in. Radius Roller on Front	Nylon	0.75	0.28	802T-W1
	Nylon	0.75	1	802T-W1H
	Dual nylon	0.75	1 (each)	802T-W1HH
	Steel	0.75	0.25	802T-W1A
	Steel	0.75	0.75	802T-W1N
	Ball bearing	0.75	0.23	802T-W1B
	Beryllium copper (nonsparking)	0.75	0.28	802T-W1J
	Nylon	0.75	0.75	802T-W1L
Non-adjustable Cast Lever 1.5 in. Radius Roller on Rear	Nylon	0.75	0.28	802T-W1E
	Nylon	0.75	1	802T-W1D
	Nylon	1.5	0.28	802T-W1G
	Steel	0.75	0.25	802T-W1F
	Steel	0.75	0.75	802T-W1C
	Nylon	0.75	0.75	802T-W1M
Non-adjustable Steel Lever 2.0 in. Radius Roller on Front	Nylon	0.75	0.28	802T-W20
	Nylon	0.75	1	802T-W20D
	Steel	0.75	0.25	802T-W20A
	Steel	0.75	0.75	802T-W20B
	Ball bearing	0.75	0.23	802T-W20C
	Beryllium copper	0.75	0.28	802T-W20E
Non-adjustable Steel Lever 2.0 in. Radius Roller on Rear	Nylon	0.75	0.28	802T-W20J
	Nylon	0.75	1	802T-W20K
	Steel	0.75	0.25	802T-W20L
	Steel	0.75	0.75	802T-W20M
	Ball bearing	0.75	0.23	802T-W20N
	Beryllium copper	0.75	0.28	802T-W20P
Non-adjustable Steel Lever 2-1/8 in. Radius Roller on Front	Nylon	0.75	0.75	802T-W18
	Nylon	0.75	1	802T-W18A

Roller Levers, continued

Type	Roller			Cat. No.
	Material	Dia. [in.]	Width [in.]	
Non-adjustable Steel Lever 2.5 in. Radius Roller on Front	Nylon	0.75	0.28	802T-W25
	Nylon	0.75	1	802T-W25D
	Steel	0.75	0.25	802T-W25A
	Steel	0.75	0.75	802T-W25B
	Ball bearing	0.75	0.23	802T-W25C
	Beryllium copper	0.75	0.28	802T-W25E
Non-adjustable Steel Lever 2.5 in. Radius Roller on Rear	Nylon	0.75	0.28	802T-W25J
	Nylon	0.75	1	802T-W25K
	Steel	0.75	0.25	802T-W25L
	Steel	0.75	0.75	802T-W25M
	Ball bearing	0.75	0.23	802T-W25N
	Beryllium copper	0.75	0.28	802T-W25P
Non-adjustable Steel Lever 3.0 in. Radius Roller on Front	Nylon	0.75	0.28	802T-W30
	Nylon	0.75	1	802T-W30D
	Steel	0.75	0.25	802T-W30A
	Steel	0.75	0.75	802T-W30B
	Ball bearing	0.75	0.23	802T-W30C
	Beryllium copper	0.75	0.28	802T-W30E
Non-adjustable Steel Lever 3.0 in. Radius Roller on Rear	Nylon	0.75	0.28	802T-W30J
	Nylon	0.75	1	802T-W30K
	Steel	0.75	0.25	802T-W30L
	Steel	0.75	0.75	802T-W30M
	Ball bearing	0.75	0.23	802T-W30N
	Beryllium copper	0.75	0.28	802T-W30P
Adjustable Lever 1.19...3 in. Radius	Nylon	0.75	0.28	802T-W2
	Nylon	0.75	1	802T-W2D
	Nylon	1.5	0.28	802T-W2A
	Steel	0.75	0.25	802T-W2B
	Ball bearing	0.75	0.23	802T-W2C
	Steel	1.4	0.27	802T-W2E
	Rubber	1.5	0.5	802T-W2R
	Beryllium copper	0.75	0.28	802T-NX94
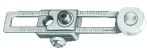 Adjustable Lever 1.19...3.5 in. Radius	Nylon	0.75	0.28	802T-W17
	Metal			802T-W17B
	Nylon	1.5		802T-W17A

Roller Levers, continued

Type	Roller			Cat. No.
	Material	Dia. [in.]	Width [in.]	
Fork Lever 1.5 in. Radius	Nylon (L.H. roller on front; R.H. roller on back)	0.75	0.28	802T-W4
	Steel (L.H. roller on front; R.H. roller on back)	0.75	0.25	802T-W4B
	Nylon (both rollers on front)	0.75	0.28	802T-W4A
	Nylon (both rollers on rear)	0.75	0.28	802T-NX115
	Nylon (both rollers on front)	0.75	1	802T-W4F
	Steel (both rollers on front)	0.75	0.25	802T-W4C
	Nylon (L.H. roller on back; R.H. roller on front)	0.75	0.28	802T-W4D
Micrometer Adjustment Lever 1.5 in. Radius (1)	Nylon (R.H. adj.)	0.75	0.28	802T-W6
	Steel (R.H. adj.)	0.75	0.25	802T-W6A
	Ball bearing (R.H. adj.)	0.75	0.23	802T-W6B
	Nylon (L.H. adj.)	0.75	0.28	802T-W6C
	Steel (L.H. adj.)	0.75	0.25	802T-W6D
	Ball bearing (L.H. adj.)	0.75	0.23	802T-W6E
	Nylon (R.H. adj.)	0.75	1	802T-W6F
Non-Adj. One-Way Lever 1.5 in. Radius	Nylon	0.75	0.28	802T-W7 (2)
	Steel	0.75	0.25	802T-W7A (2)
	Ball bearing	0.75	0.23	802T-W7B (2)
Non-Adj. Offset Lever 1.44 in. Radius Roller on Front	Nylon	0.75	0.28	802T-W12 (3)
	Steel	0.75	0.25	802T-W12A (3)
	Bearing roller	0.75	0.23	802T-W12B
Non-Adj. Offset Lever 1.44 in. Radius Roller on Rear	Nylon	0.75	0.28	802T-W12E
	Steel	0.75	0.25	802T-W12F

(1) The micrometer adjustment roller lever is designed especially for installations where the position of the roller is a critical factor. This lever has a pivoted roller that can be turned laterally. After clamping the lever to the switch shaft, the position of the roller can be precisely adjusted through an arc of 7.5° on either side of the center or straight-line position.
(2) Do not use on maintained contact limit switches.
(3) When mounted on plug-in devices, the offset lever provides equivalent cam tracking to the NonPlug-In devices using catalog number 802T-W1 levers.

Roller Levers — Corrosion-resistant

Type	Roller			Cat. No.
	Material	Dia. [in.]	Width [in.]	
1.5 in. Radius Roller on Front	Type 316 stainless steel roller, roller pin, and clamp pin One-piece cast aluminum arm is protected with TUFRAM® (1)	0.75	0.25	802MC-W1A
1.5 in. Radius Roller on Rear	Nylon Roller One-piece cast aluminum arm is protected with TUFRAM (1)	1.5	0.28	802MC-W1G
Non-Adj. Offset Lever 1.44 in. Radius Roller on Front	Nylon Roller One-piece cast aluminum arm is protected with TUFRAM (1)	0.75	0.28	802MC-W12
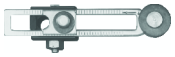 Adjustable 1.19...3 in. Radius	Type 316 stainless steel roller, roller pin, clamp pin, and adjustable lever arm Block is cast aluminum protected with TUFRAM (1)	0.75	0.25	802MC-W2B

(1) TUFRAM is a synergistic coating that combines the advantages of anodizing with a controlled infusion of PTFE for added corrosion resistance.

Rod Levers

Type	Material	Dia. [in.]	Cat. No.
	Stainless steel rod 5 in. long	0.13	802T-W3 (1)
	Stainless steel rod 8.5 in. long	0.13	802T-W3B (1)
	Stainless steel rod 12 in. long	0.13	802T-NX50
	Stainless steel rod 11.5 in. long	0.13	802T-W3A
		0.08	802T-W3F (2)
	Stainless steel rod 14 in. long	0.13	802T-NX159
	Nylon rod 12 in. long	0.25	802T-W3C 802T-NX142 (3)
	Stainless steel rod 5 in. long	0.06	802T-W5 (1)
	Stainless steel rod 5 in. long one way	0.06	802T-W8 (4)
	Nylatron looped rod 6 in. long, 2 in. wide loop	0.18	802T-W14
	Nylatron looped rod 9 in. long, 2 in. wide loop		802T-NX119
	Steel rod 9 in. long	0.25	802T-W16
	Nylon rod 9 in. long		802T-W16A

(1) Recommended for use with low operating torque switches.
(2) Not for use with 802M-NPY5 or 802M-ASY5 type switches.
(3) Recommended for high impact applications.
(4) Do not use on maintained contact limit switches.

Rod Levers — Corrosion-resistant

Type	Material	Dia. [in.]	Cat. No.
	Type 316 stainless steel rod 5 in. long Block is cast aluminum protected with TUFRAM (1)	0.13	802MC-W3
	Type 316 stainless steel rod 11.5 in. long Block is cast aluminum protected with TUFRAM (1)	0.08	802MC-W3A
	Nylon rod 12 in. long Block is cast aluminum protected with TUFRAM (1)	0.25	802MC-W3C
	Nylon rod only	0.25	WF25507

(1) TUFRAM is a synergistic coating that combines the advantages of anodizing with a controlled infusion of PTFE for added corrosion resistance.

Bulletin 440P

IMPORTANT The actuator is included with the purchase of every 440P limit switch.

Roller Levers

Description		Cat. No.
	Short lever with nylon roller for 440P-ASL*x* or -AWL*x*	440P-WA1
	Short lever with metal roller for 440P-ASL*x* or -AWL*x*	440P-WA1A
	Short lever with wide roller for 440P-ASL*x* or -AWL*x*	440P-WA1B
	Short lever with nylon roller for 440P-CSL*x* or -CHM*x*	440P-WC1
	Short lever with metal roller for 440P-CSL*x* or -CHM*x*	440P-WC1A
	Short lever with nylon roller for 440P-MSL*x* or -MMH*x*	440P-WM1
	Short lever with metal roller for 440P-MSL*x* or -MMH*x*	440P-WM1A
	Adjustable lever arm with nylon roller for 440P-AAL*x* or -AA1L*x*	440P-WA2A
	Adjustable lever arm with steel roller for 440P-AAL*x* or -AA1L*x*	440P-WA2B
	Adjustable lever with nylon roller for 440P-CAL*x*, -CRR*x*, -MRR*x*	440P-WC2
	Adjustable lever with metal roller for 440P-CAL*x* or -CRR*x*	440P-WC2B
	Adjustable lever with large rubber roller for 440P-CAL*x*, -CRR*x*, -MRR*x*	440P-WC2A
	Adjustable lever with nylon roller for 440P-MAL*x* or -MRR*x*	440P-WM2
	Adjustable lever with metal roller for 440P-MAL*x* or -MRR*x*	440P-WM2A

Rods

Description		Cat. No.
	Adjustable metal rod for 440P-MAR*x*	440P-WM3
	Metal spring rod for 440P-MSR*x*	440P-WM4
	Telescopic arm for 440P-MTA*x*	440P-WM5

Approximate Dimensions

Dimensions are shown in mm (in.). Dimensions are not intended to be used for installation purposes.

802 Levers

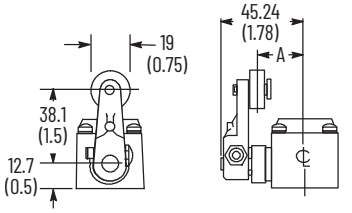

Cat. No. 802T-W1C [A = 20.6 (0.81)]
Cat. Nos. 802T-W1E and 802T-W1F [A = 26.2 (1.03)]
Shipping Wt. 57 g (2 oz) (W1C), 28 g (1 oz) (W1E), 43 g (1.5 oz) (W1F)

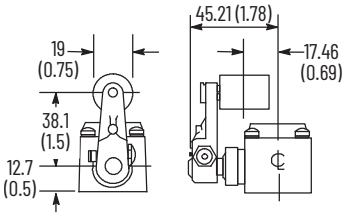

Cat. No. 802T-W1D
Shipping Wt. 43 g (1.5 oz)

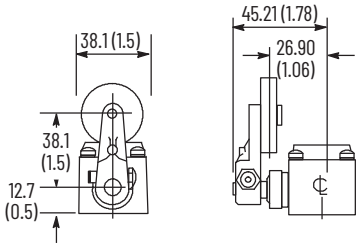

Cat. No. 802T-W1D
Shipping Wt. 43 g (1.5 oz)

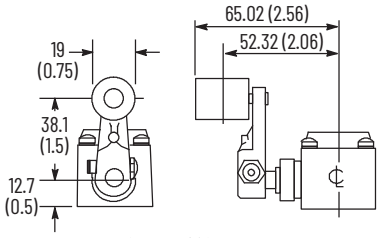

Cat. No. 802T-W1H
Shipping Wt. 43 g (1.5 oz)

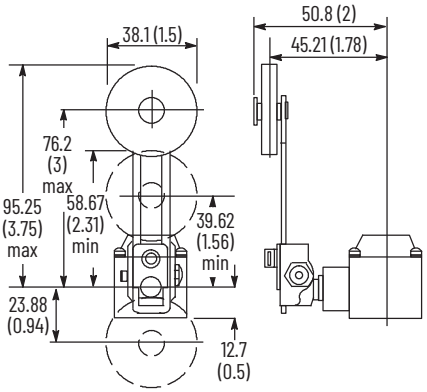

Cat. No. 802T-W2A
Shipping Wt. 57 g (2 oz)

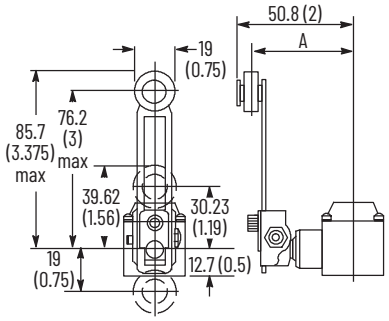

Cat. Nos. 802T-W2 and 802T-W2B [A = 45.2 (1.78)]
Cat. No. 802T-W2C [A = 46 (1.81)]
Shipping Wt. 57 g (2 oz)

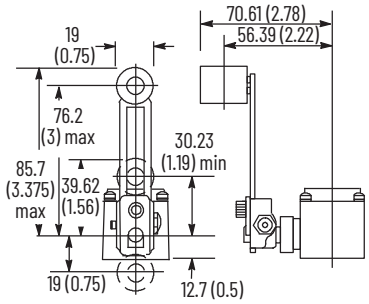

Cat. No. 802T-W2D
Shipping Wt. 57 g (2 oz)

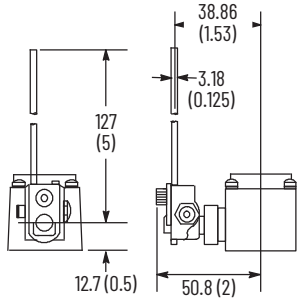

Cat. No. 802T-W3
Shipping Wt. 43 g (1.5 oz)

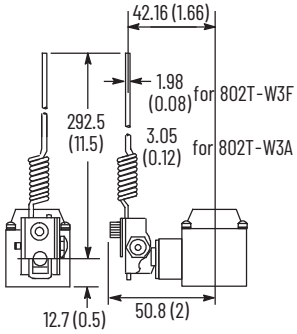

Cat. Nos. 802T-W3A and 802T-W3F
Shipping Wt. 57 g (2 oz)

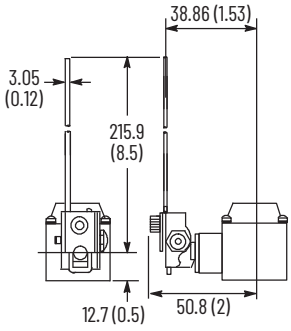

Cat. Nos. 802T-W3B and 802T-W3F
Shipping Wt. 43 g (1.5 oz)

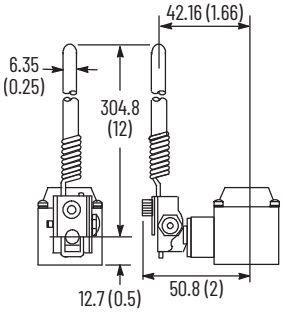

Cat. No. 802T-W3C
Shipping Wt. 57 g (2 oz)

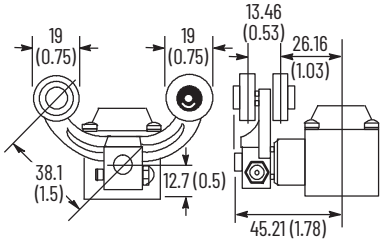

Cat. Nos. 802T-W4 and 802T-W4D
Shipping Wt. 43 g (1.5 oz)
Cat. No. 802T-W4B
Shipping Wt. 57 g (2 oz)

Dimensions are shown in mm (in.). Dimensions are not intended to be used for installation purposes.

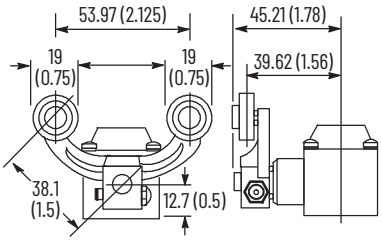

Cat. Nos. 802T-W4A and 802T-W4C
Shipping Wt. 57 g (2 oz)

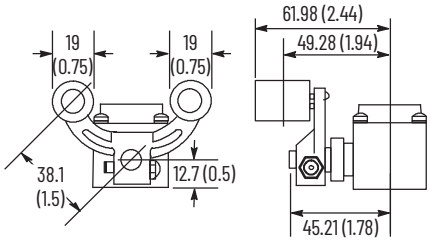

Cat. No. 802T-W4F
Shipping Wt. 57 g (2 oz)

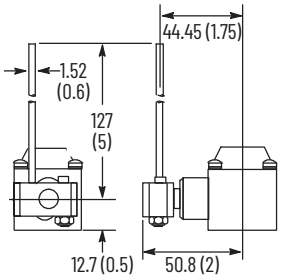

Cat. No. 802T-W5
Shipping Wt. 28 g (1 oz)

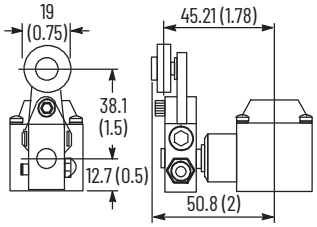

Cat. Nos. 802T-W6, 802T-W6A,
802T-W6B, 802T-W6E
Shipping Wt. 57 g (2 oz)

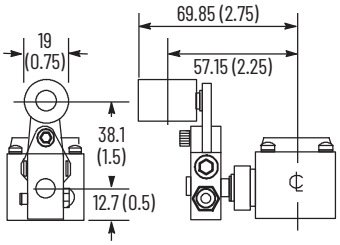

Cat. No. 802T-W6F
Shipping Wt. 57 g (2 oz)

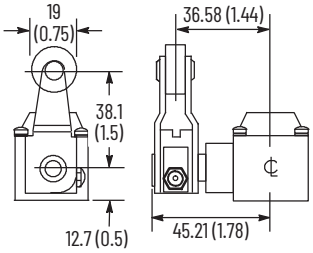

Cat. Nos. 802T-W7, 802T-W7A
and 802T-W7B
Shipping Wt. 57 g (2 oz)

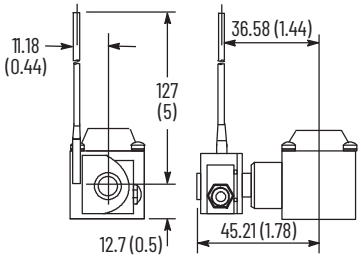

Cat. No. 802T-W8
Shipping Wt. 43 g (1.5 oz)

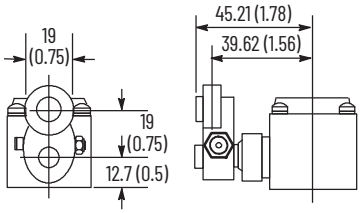

Cat. No. 802T-W9
Shipping Wt. 28 g (1 oz)

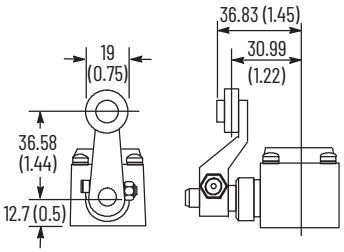

Cat. No. 802T-W12
Shipping Wt. 28 g (1 oz.)
Cat. Nos. 802T-W12A, 802T-W6B, 802T-W6E
Shipping Wt. 43 g (1.5 oz)

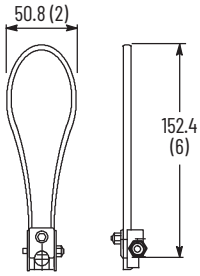

Cat. No. 802T-W14
Shipping Wt. 43 g (1.5 oz)

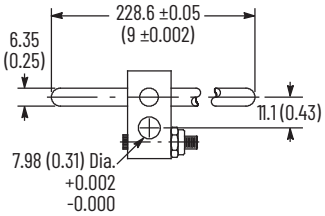

Cat. Nos. 802T-W16 and 802T-W16A

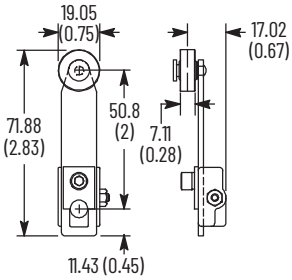

Cat. No. 802T-W20
Shipping Wt. 57 g (2 oz)

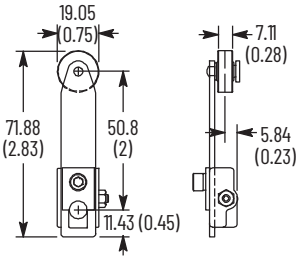

Cat. No. 802T-W20J
Shipping Wt. 57 g (2 oz)

Dimensions are shown in mm (in.). Dimensions are not intended to be used for installation purposes.

440P Levers

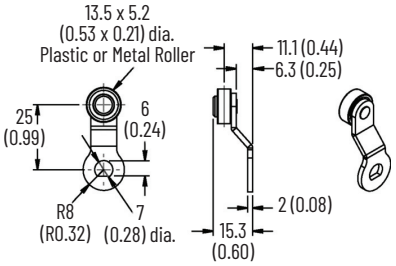

Cat. Nos. 440P-WA1 and 440P-WA1A

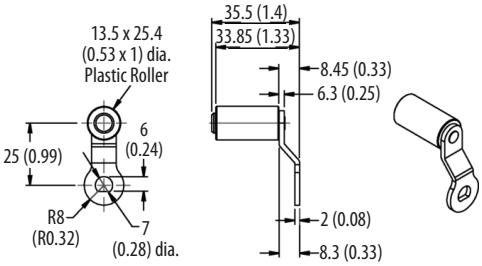

Cat. No. 440P-WA1B

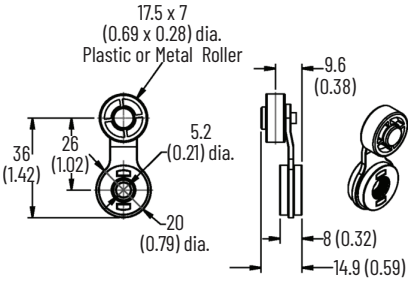

Cat. Nos. 440P-WC1 and 440P-WC1A

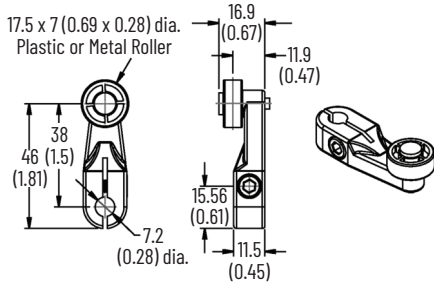

Cat. Nos. 440P-WM1 and 440P-WM1A

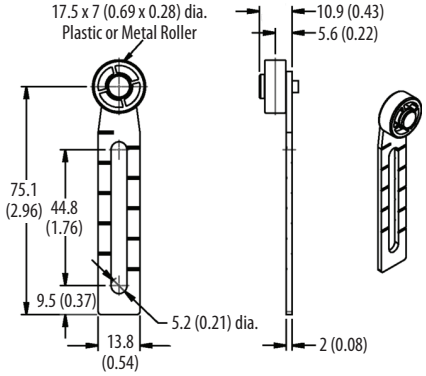

Cat. Nos. 440P-WA2A and 440P-WA2B

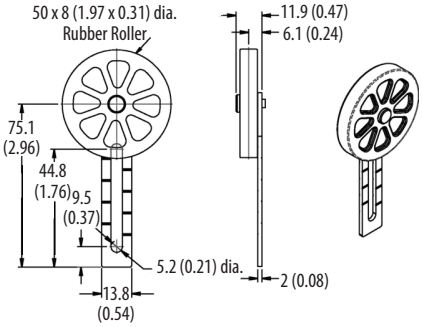

Cat. No. 440P-WC2A

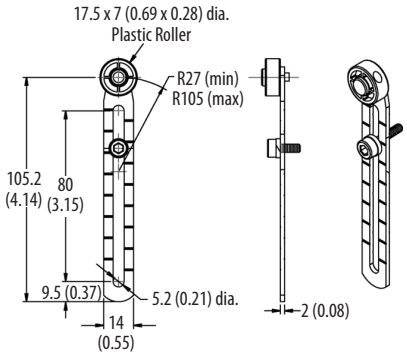

Cat. No. 440P-WM2

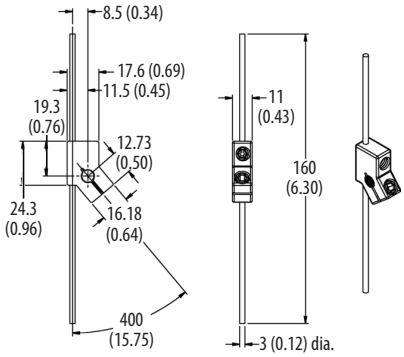

Cat. No. 440P-WM3

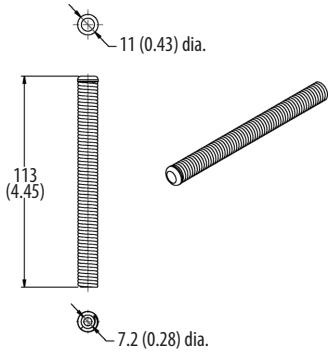

Cat. No. 440P-WM4

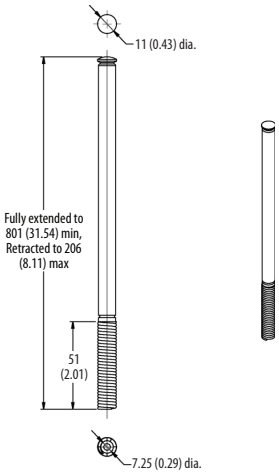

Cat. No. 440P-WM5

Rockwell Automation Support

Use these resources to access support information.

Technical Support Center	Find help with how-to videos, FAQs, chat, user forums, and product notification updates.	rok.auto/support
Knowledgebase	Access Knowledgebase articles.	rok.auto/knowledgebase
Local Technical Support Phone Numbers	Locate the telephone number for your country.	rok.auto/phonesupport
Literature Library	Find installation instructions, manuals, brochures, and technical data publications.	rok.auto/literature
Product Compatibility and Download Center (PCDC)	Download firmware, associated files (such as AOP, EDS, and DTM), and access product release notes.	rok.auto/pcdc

Documentation Feedback

Your comments help us serve your documentation needs better. If you have any suggestions on how to improve our content, complete the form at rok.auto/docfeedback.

Allen-Bradley, expanding human possibility, and Rockwell Automation are trademarks of Rockwell Automation, Inc.
Trademarks not belonging to Rockwell Automation are property of their respective companies.

Rockwell Automation maintains current product environmental compliance information on its website at rok.auto/pec.

Rockwell Otomasyon Ticaret A.Ş. Kar Plaza İş Merkezi E Blok Kat:6 34752, İçerenköy, İstanbul, Tel: +90 (216) 5698400 EEE Yönetmeliğine Uygundur

Connect with us.

rockwellautomation.com — expanding **human possibility**®

AMERICAS: Rockwell Automation, 1201 South Second Street, Milwaukee, WI 53204-2496 USA, Tel: (1) 414.382.2000, Fax: (1) 414.382.4444
EUROPE/MIDDLE EAST/AFRICA: Rockwell Automation NV, Pegasus Park, De Kleetlaan 12a, 1831 Diegem, Belgium, Tel: (32) 2 663 0600, Fax: (32) 2 663 0640
ASIA PACIFIC: Rockwell Automation, Level 14, Core F, Cyberport 3, 100 Cyberport Road, Hong Kong, Tel: (852) 2887 4788, Fax: (852) 2508 1846

Publication LIMIT-TD001B-EN-P - February 2022
Supersedes Publication LIMIT-TD001A-EN-P - September 2014

Copyright © 2022 Rockwell Automation, Inc. All rights reserved. Printed in the U.S.A.