Allen-Bradley

Installation Instructions

MicroLogix 1200 RTD/Resistance Input Module

Catalog Number 1762-IR4

Topic	Page
Module Overview	2
Description	2
Module Installation	3
System Assembly	4
Mounting	4
Field Wiring Connections	7
I/O Memory Mapping	15
Specifications	19
North American Hazardous Location Approval	22
Additional Resources	23

Publication 1762-IN014B-EN-P - July 2013

Module Overview

The 1762-IR4 module receives and stores digitally converted analog data from RTDs or other resistance inputs, such as potentiometers. The module supports connections from any combination of up to 4 RTDs or other resistance inputs. See the input specifications on page 20 for supported RTD and resistance types, their associated temperature ranges, and the analog input signal ranges that each channel supports. Each of the 4 input channels is individually configurable for a specific input device and provides open- or short-circuit and over- or under-range indication.

Description

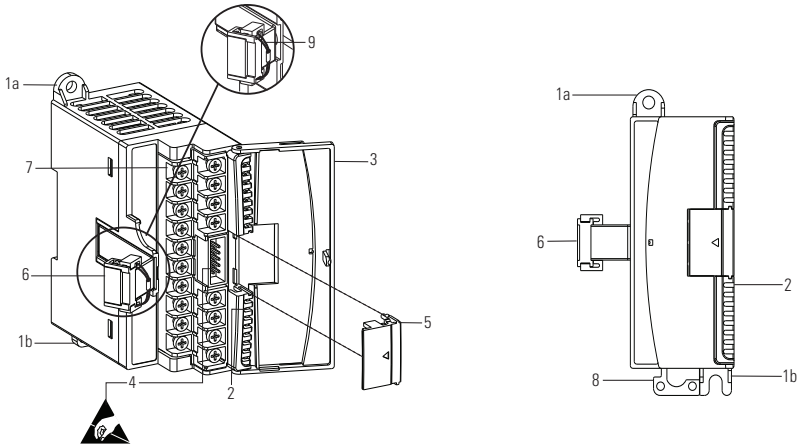

Item	Description	Item	Description
1a	upper panel mounting tab	5	bus connector cover
1b	lower panel mounting tab	6	flat ribbon cable with bus connector (female)
2	power diagnostic LED	7	terminal block
3	module door with terminal identification label	8	DIN rail latch
4	bus connector with male pins	9	pull loop

Module Installation

1762 I/O is suitable for use in an industrial environment when installed in accordance with these instructions. Specifically, this equipment is intended for use in clean, dry environments (Pollution degree 2[1]) and to circuits not exceeding Over Voltage Category II[2] (IEC 60664-1).[3]

Prevent Electrostatic Discharge

ATTENTION

Electrostatic discharge can damage integrated circuits or semiconductors if you touch bus connector pins. Follow these guidelines when you handle the module:

- Touch a grounded object to discharge static potential.
- Wear an approved wrist-strap grounding device.
- Do not touch the bus connector or connector pins.
- Do not touch circuit components inside the module.
- If available, use a static-safe work station.
- When not in use, keep the module in its static-shield box.

Remove Power

ATTENTION

Remove power before removing or installing this module. When you remove or install a module with power applied, an electrical arc may occur. An electrical arc can cause personal injury or property damage by:

- sending an erroneous signal to your system's field devices, causing unintended machine motion
- causing an explosion in a hazardous environment
- causing permanent damage to the module's circuitry

Electrical arcing causes excessive wear to contacts on both the module and its mating connector. Worn contacts may create electrical resistance.

(1) Pollution Degree 2 is an environment where, normally, only non-conductive pollution occurs except that occasionally a temporary conductivity caused by condensation shall be expected.

(2) Over Voltage Category II is the load level section of the electrical distribution system. At this level transient voltages are controlled and do not exceed the impulse voltage capability of the product's insulation.

(3) Pollution Degree 2 and Over Voltage Category II are International Electrotechnical Commission (IEC) designations.

System Assembly

The expansion I/O module is attached to the controller or another I/O module by means of a ribbon cable after mounting as shown below.

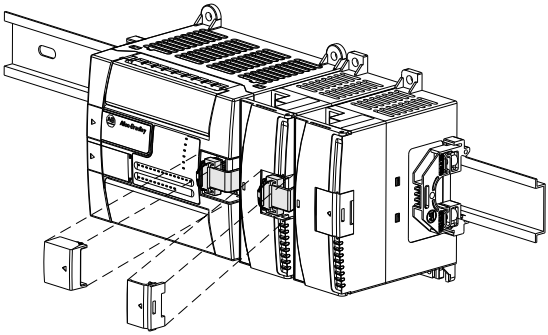

TIP Use the pull loop on the connector to disconnect modules. Do not pull on the ribbon cable.

WARNING

EXPLOSION HAZARD

- In Class I, Division 2 applications, the bus connector must be fully seated and the bus connector cover must be snapped in place.
- In Class I, Division 2 applications, all modules must be mounted in direct contact with each other as shown on page 5. If DIN rail mounting is used, an end stop must be installed ahead of the controller and after the last 1762 I/O module.

Mounting

ATTENTION Do not remove protective debris strip until after the module and all other equipment near the module is mounted and wiring is complete. Once wiring is complete and the module is free of debris, carefully the remove protective debris strip. Failure to remove the strip before operating can cause overheating.

Minimum Spacing

Maintain spacing from enclosure walls, wireways, adjacent equipment, etc. Allow 50.8 mm (2 in.) of space on all sides for adequate ventilation, as shown:

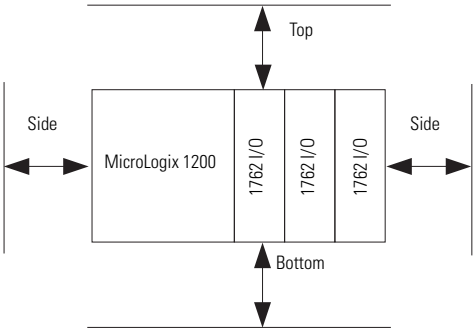

TIP

The 1762 expansion I/O may be mounted horizontally only.

ATTENTION

During panel or DIN rail mounting of all devices, be sure that all debris (metal chips, wire strands, etc.) is kept from falling into the module. Debris that falls into the module could cause damage when power is applied to the module.

DIN Rail Mounting

The module can be mounted using the following DIN rails: 35 x 7.5 mm (EN 50 022 - 35 x 7.5) or 35 x 15 mm (EN 50 022 - 35 x 15).

Before mounting the module on a DIN rail, close the DIN rail latch. Press the DIN rail mounting area of the module against the DIN rail. The latch will momentarily open and lock into place.

Use DIN rail end anchors (Allen-Bradley part number 1492-EA35 or 1492-EAH35) for environments with vibration or shock concerns.

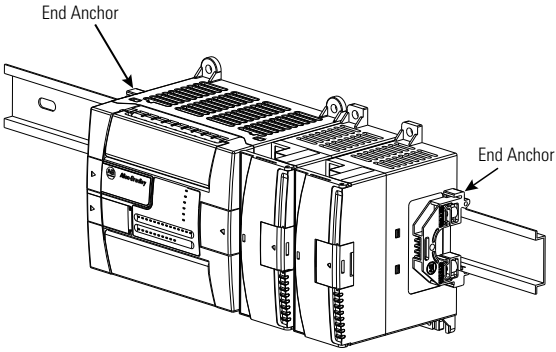

TIP For environments with extreme vibration and shock concerns, use the panel mounting method described below, instead of DIN rail mounting.

Panel Mounting

Use the dimensional template shown below to mount the module. The preferred mounting method is to use two M4 or #8 panhead screws per module. M3.5 or #6 panhead screws may also be used, but a washer may be needed to ensure a good ground contact. Mounting screws are required on every module.

For more than two modules: (number of modules - 1) x 40.4 mm (1.59 in.)

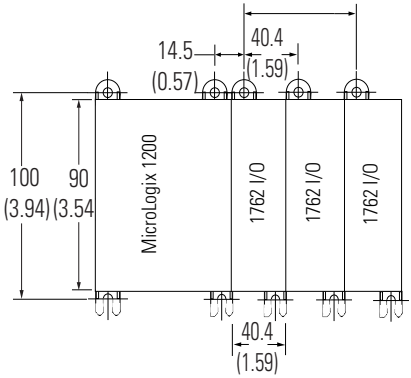

NOTE:
Hole spacing tolerance: ±0.4 mm (0.016 in.).

Field Wiring Connections

Grounding the Module

This product is intended to be mounted to a well-grounded mounting surface such as a metal panel. Additional grounding connections from the module's mounting tabs or DIN rail (if used) are not required unless the mounting surface cannot be grounded. Refer to Industrial Automation Wiring and Grounding Guidelines, Allen-Bradley publication 1770-4.1, for additional information.

System Wiring Guidelines

Consider the following when wiring your system:

- Do not use the module's NC terminals as connection points.
- Use Belden shielded, twisted-pair wire to ensure proper operation and high immunity to electrical noise. See "RTD Wiring Considerations".
- To limit noise, locate RTD and resistance device signal wires as far away as possible from power lines, load lines, and other sources of electrical noise, such as hard-contact switches, relays, and AC motor drives.
- Locate RTD modules away from other modules which generate a significant amount of heat.
- Under normal conditions, the drain wire and shield junction should be connected to earth ground, via a panel or DIN rail mounting screw at the 1762-IR4 module end.
- Keep shield connection to ground as short as possible.
- To ensure optimum accuracy, limit overall cable impedance by keeping your cable as short as possible. Locate the I/O system as close to your sensors or actuators as your application will permit. See the table on the following page.

Terminal Block Layout

NC terminals are not intended for use as connection points.
Do not connect any wires to the NC terminals.

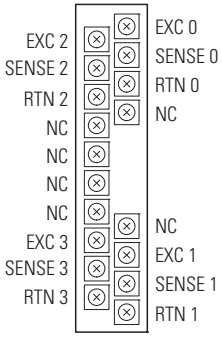

RTD Wiring Considerations

Since the operating principle of the RTD module is based on the measurement of resistance, take special care when selecting your input cable. For 2-wire or 3-wire configurations, select a cable that has a consistent impedance throughout its entire length.

Configuration	Recommended Cable
2-wire	Belden™ 9501 or equivalent
3-wire — less than 30.48 m (100ft.)	Belden™ 9533 or equivalent
3-wire — greater than 30.48 m (100 ft.) or high humidity conditions	Belden™ 83503 or equivalent

IMPORTANT

The RTD module requires three wires to compensate for lead resistance error. We recommend that you do not use 2-wire RTDs if long cable runs are required, as it reduces the accuracy of the system. However, if a two-wire configuration is required, reduce the effect of the lead wire resistance by using a lower gauge wire for the cable (for example, use AWG #16 instead of AWG #24). The module's terminal block accepts two AWG #14 gauge wires.

When using a 3-wire configuration, the module compensates for resistance error due to lead wire length. For example, in a 3-wire configuration, the module reads the resistance due to the length of one of the wires and assumes that the resistance of the other wire is equal. If the resistances of the individual lead wires are much different, an error may exist. The closer the resistance values are to each other, the greater the amount of error is eliminated.

IMPORTANT

To ensure temperature or resistance value accuracy, the resistance difference of the cable lead wires must be equal to or less than 0.01Ω .

To insure that the lead values match as closely as possible:

- Keep lead resistance as small as possible and less than 25Ω .
- Use quality cable that has a small tolerance impedance rating.
- Use a heavy-gauge lead wire which has less resistance per foot.

RTD Wiring Configurations

For a 3-wire configuration, the module can compensate for a maximum cable length associated with an overall cable impedance of 25 ohms.

Three configurations of RTDs can be connected to the 1762-IR4 module:

- 2-wire RTD, which is composed of an RTD EXC (excitation) lead wire and a RTN (return) lead wire
- 3-wire RTD, which is composed of a Sense and 2 RTD lead wires (RTD EXC and RTN)
- 4-wire RTD, which is composed of a Sense and 2 RTD lead wires (RTD EXC and RTN). The second sense wire of a 4-wire RTD is left open.

2-Wire RTD Configuration

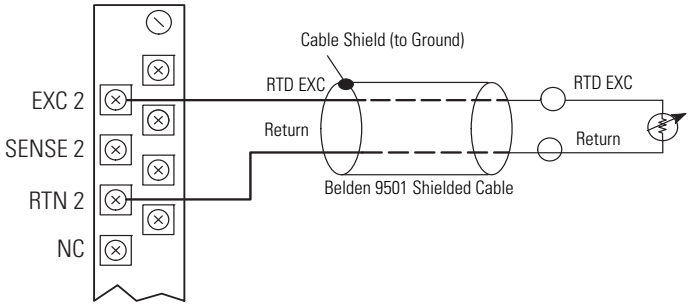

IMPORTANT Using 2-wire configurations does not permit the module to compensate for resistance error to do lead wire length. The resulting analog data includes the effect of this uncompensated lead wire resistance. The module continues to place the uncompensated analog data in the input data file, but the open-circuit status bit (OCx) is set in word 4 of the input data file for any enabled channel using a 2-wire configuration. These status bits may be used in the control program to indicate that the analog data includes error due to uncompensated lead wires. See page 16 for a detailed discussion of the open-circuit status bits.

3-Wire RTD Configuration

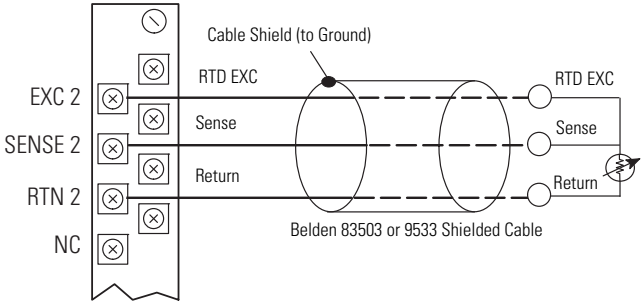

4-Wire RTD Configuration

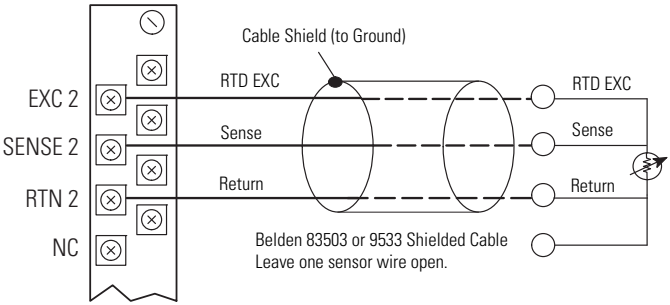

Wiring Resistance Devices (Potentiometers)

Potentiometer wiring requires the same type of cable as that for the RTD described on page 8. Potentiometers can be connected to the module as a 2-wire or 3-wire connection as shown on page 11.

2-Wire Potentiometer Interconnection

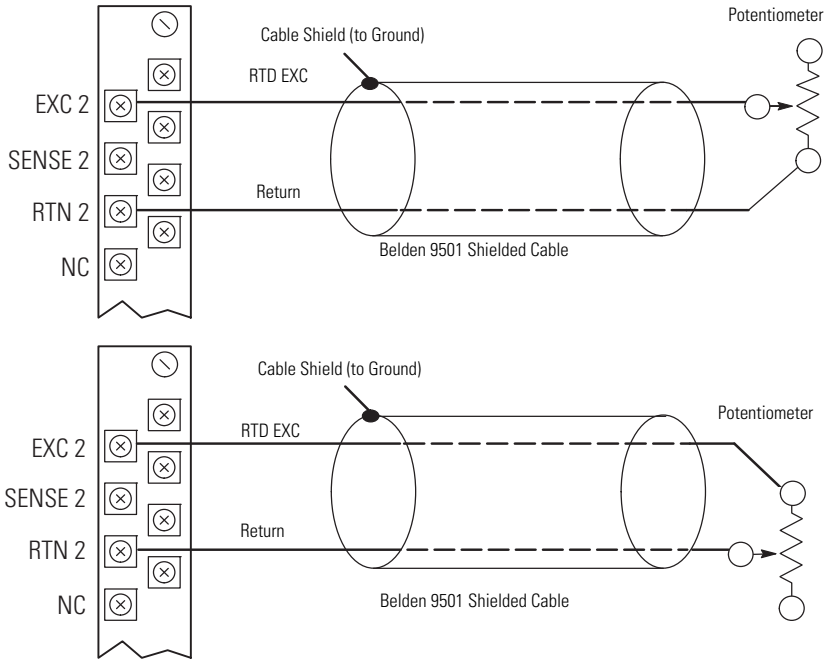

TIP The potentiometer wiper arm can be connected to either the EXC or return terminal, depending on whether you want increasing or decreasing resistance.

IMPORTANT Using 2-wire configurations does not permit the module to compensate for resistance error to do lead wire length. The resulting analog data includes the effect of this uncompensated lead wire resistance. The module continues to place the uncompensated analog data in the input data file, but the open-circuit status bit (OCx) is set in word 4 of the input data file for any enabled channel using a 2-wire configuration. These status bits may be used in the control program to indicate that the analog data includes error due to uncompensated lead wires. See page 16 for a detailed discussion of the open-circuit status bits.

3-Wire Potentiometer Interconnection

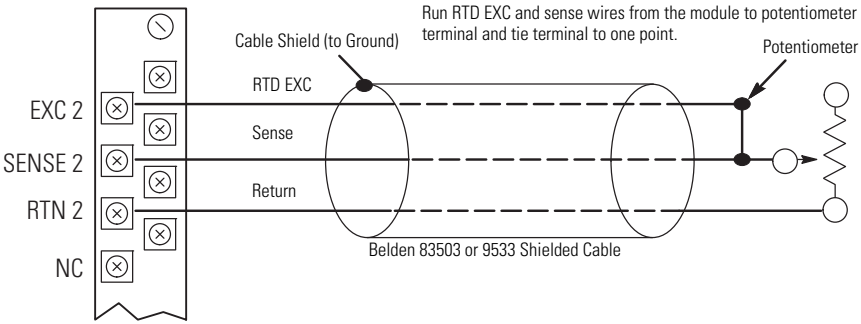

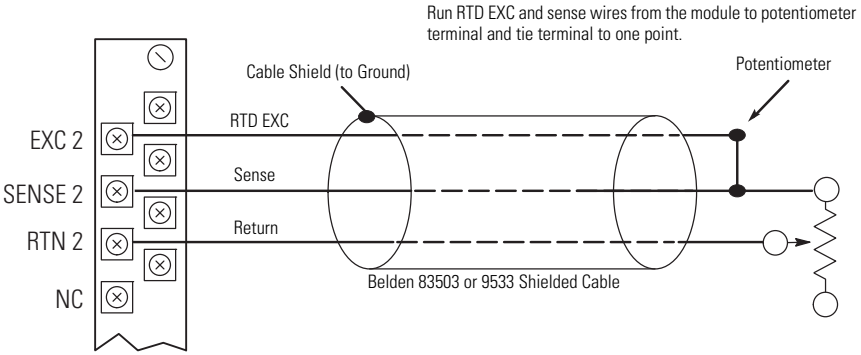

TIP

The potentiometer wiper arm can be connected to either the EXC or return terminal depending on whether you want increasing or decreasing resistance.

Labeling the Terminals

A write-on label is provided with the module. Mark the identification of each terminal with permanent ink, and slide the label back into the door.

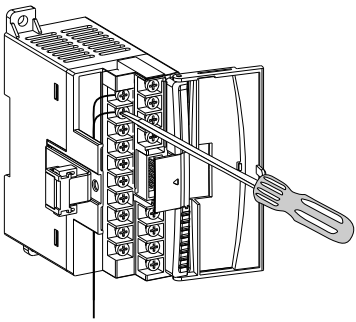

Wiring the Finger-Safe Terminal Block

ATTENTION

Be careful when stripping wires. Wire fragments that fall into a module could cause damage when power is applied. Once wiring is complete, ensure the module is free of all metal fragments.

When wiring the terminal block, keep the finger-safe cover in place.

1. Route the wire under the terminal pressure plate. You can use the stripped end of the wire or a spade lug. The terminals will accept a 6.35 mm (0.25 in.) spade lug.
2. Tighten the terminal screw making sure the pressure plate secures the wire. Recommended torque when tightening terminal screws is 0.904 Nm (8 lb-in.).
3. After wiring is complete, remove the debris shield.

TIP

If you need to remove the finger-safe cover, insert a screw driver into one of the square wiring holes and gently pry the cover off. If you wire the terminal block with the finger-safe cover removed, you will not be able to put it back on the terminal block because the wires will be in the way.

Wire Size and Terminal Screw Torque

Each terminal accepts up to two wires with the following restrictions:

Wire Type		Wire Size	Terminal Screw Torque
Solid	Cu-90 °C (194°F)	#14…22 AWG	0.904 Nm (8 lb-in.)
Stranded	Cu-90 °C (194°F)	#16…22 AWG	0.904 Nm (8 lb-in.)

Wiring Input Devices to the 1762-IR4

ATTENTION

Be careful when stripping wires. Wire fragments that fall into a module could cause damage at power up. Once wiring is complete, ensure the module is free of all metal fragments.

After the module is properly installed, follow the wiring procedure below, using Belden 83503 or 9533 shielded cable.

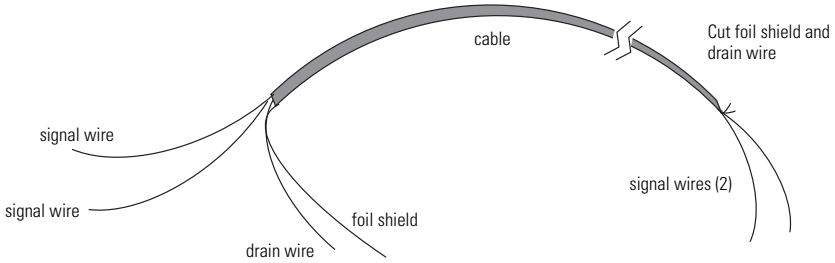

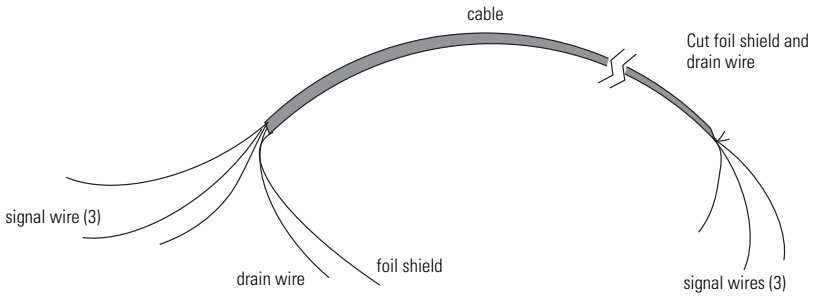

To wire your sensor to the module, follow these steps:

1. At each end of the cable, strip some casing to expose the individual wires.
2. Trim the signal wires to 2-inch lengths. Strip about 3/16 inch (5 mm) of insulation away to expose the end of the wire.
3. At one end of the cable, twist the drain wire and foil shield together, bend them away from the cable, and apply shrink wrap. Then earth ground at the preferred location based on the type of sensor you are using.
4. At the other end of the cable, cut the drain wire and foil shield back to the cable and apply shrink wrap.
5. Connect the signal wires to the module terminal block and input.
6. Repeat steps 1 through 5 for each channel on the module.

I/O Memory Mapping

Addressing

The addressing scheme for 1762 Expansion I/O is shown below.

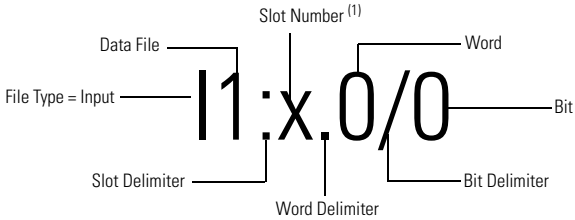

(1) I/O located on the controller (embedded I/O) is slot 0. I/O added to the controller (expansion I/O) begins with slot 1.

Input Data File

For each module, slot x, words 0 through 3 contain the analog values of the inputs. Words 4 and 5 provide sensor/channel status feedback. The input data file for each configuration is shown below.

Word/ Bit	15	14	13	12	11	10	9	8	7	6	5	4	3	2	1	0
0	RTD/Resistance Input Data Channel 0															
1	RTD/Resistance Input Data Channel 1															
2	RTD/Resistance Input Data Channel 2															
3	RTD/Resistance Input Data Channel 3															
4	Reserved				OC3	OC2	OC1	OC0	Reserved				S3	S2	S1	S0
5	U0	O0	U1	O1	U2	O2	U3	O3	Reserved							

The bits are defined as follows:

- Sx = General status bits for input channels 0...3. This bit is set (1) when an error (over- or under-range, open-circuit or input data not valid condition) exists for that channel, or there is a general module hardware error. An input data not valid condition is determined by the user program. See the MicroLogix™ 1200 RTD/Resistance Input Module User Manual, publication number 1762-UM003, for details.

- OCx = Open-circuit indication for channels 0...3, using either RTD or resistance inputs. Short-circuit detection for RTD inputs only. Short-circuit detection for resistance inputs is not indicated because 0 is a valid number.

- Ox = Over-range flag bits for input channels 0...3, using either RTD or resistance inputs. These bits can be used in the control program for error detection.

- Ux = Under-range flag bits for channels 0...3, using RTD inputs only.
  These bits can be used in the control program for error detection. Under-range detection for direct resistance inputs is not indicated because 0 is a valid number.

Configuration Data File

The configuration of the format for analog inputs and outputs is made at going to run (GTR). Changes made to the configuration file while in run mode have no effect. Words 0...3 of the configuration file allow you to change the parameters of each channel independently. Word 0 corresponds to Channel 0, Word 1 to Channel 1, etc. The functional arrangement of the bits is shown below for a single word/channel.

To Select		Make these bit settings															
		15	14	13	12	11	10	9	8	7	6	5	4	3	2	1	0
Filter Frequency	10 Hz														1	1	0
	60 Hz														0	0	0
	50 Hz														0	0	1
	250Hz														0	1	1
	500 Hz														1	0	0
	1 kHz														1	0	1
Excitation Current	1.0 mA													0			
	0.5 mA													1			
Cyclic Lead Compensation	Enable												0				
	Disable												1				
Open-circuit/ Broken Input	Upscale										0	0					
	Downscale										0	1					
	Last State										1	0					
	Zero										1	1					
Temperature Units Mode	°C									0							
	°F									1							
Input/Sensor Type	100Ω Pt 385					0	0	0	0								
	200Ω Pt 385					0	0	0	1								
	500Ω Pt 385					0	0	1	0								
	1000Ω Pt 385					0	0	1	1								
	100Ω Pt 3916					0	1	0	0								
	200Ω Pt 3916					0	1	0	1								
	500Ω Pt 3916					0	1	1	0								
	1000Ω Pt 3916					0	1	1	1								
	10Ω Cu 426					1	0	0	0								
	120Ω Ni 618					1	0	0	1								
	120Ω Ni 672					1	0	1	0								
	604Ω NiFe 518					1	0	1	1								
	150Ω					1	1	0	0								
	500Ω					1	1	0	1								
	1000Ω					1	1	1	0								
	3000Ω					1	1	1	1								

To Select		Make these bit settings															
		15	14	13	12	11	10	9	8	7	6	5	4	3	2	1	0
Data Format	Raw/Proportional		0	0	0												
	Engineering Units		0	0	1												
	Engr. Units X 10		1	0	0												
	Scaled-for-PID		0	1	0												
	Percent Range		0	1	1												
Enable Channel	Enable	1															
	Disable	0															

Module Configuration Word

Word 4 of the configuration data file contains the Enable/Disable Cyclic Calibration bit, as shown in the table below.

To Select		Make these bit settings															
		15	14	13	12	11	10	9	8	7	6	5	4	3	2	1	0
Cyclic Calibration	Enabled(1)																0
	Disabled																1

(1) When enabled, an autocalibration cycle is performed on all enabled channels every 5 minutes.

Specifications

General Specifications

Specification	Value
Dimensions, HxWxD	90 x 40 x 87 mm (3.54 x1.58 x 3.43 in.) height including mounting tabs is 110 mm (4.33 in.)
Approximate Shipping Weight (with carton)	260 g (0.57 lbs.)
Storage Temperature	-40…85 °C (-40…185 °F)
Operating Temperature	0…55 °C (+32…131 °F)
Operating Humidity	5…95% non-condensing
Operating Altitude	2000 m (6561 ft)
Vibration	Operating: 10…500 Hz, 5 g, 0.030 in. max. peak-to-peak
Shock	Operating: 30 g
Bus Current Draw (max.)	40 mA @ 5V DC 50 mA @ 24V DC
Heat Dissipation	1.5 Watts
Input Group to System Isolation	30V AC/30V DC rated working voltage(1) (N.E.C. Class 2 required) (IEC Class 2 reinforced insulation) type test: 500V AC or 707V DC for 1 minute
Module Power LED	On: indicates power is applied.
Vendor I.D. Code	1
Product Type Code	10
Product Code	65
Hazardous Environment Class	Class I, Division 2, Hazardous Location, Groups A, B, C, D ISA/ANSI 12.12.01 (C-UL under CSA C22.2 No. 213)
Radiated and Conducted Emissions	EN50081-2 Class A
ESD Immunity (EN61000-4-2)	4 kV contact, 8 kV air, 4 kV indirect
Radiated Immunity (EN61000-4-3)	10 V/m, 80…1000 MHz, 80% amplitude modulation, +900 MHz keyed carrier
Fast Transient Burst (EN61000-4-4)	2 kV, 5 kHz
Surge Immunity (EN61000-4-5)	1 kV galvanic gun
Conducted Immunity (EN61000-4-6)	10V, 0.15…80 MHz(2)

(1) Rated working voltage is the maximum continuous voltage that can be applied at the terminals with respect to earth ground.

(2) Conducted Immunity frequency range may be 150 kHz to 30 MHz if the Radiated Immunity frequency range is 30 MHz to 1000 MHz.

Input Specifications

Specification	1762-IR4	
Input Types	100Ω Platinum 385 200Ω Platinum 385 500Ω Platinum 385 1000Ω Platinum 385 100Ω Platinum 3916 200Ω Platinum 3916 500Ω Platinum 3916 1000Ω Platinum 3916	10Ω Copper 426 120Ω Nickel 672 120Ω Nickel 618 604Ω Nickel-Iron 518 0…150Ω 0…500Ω 0…1000Ω 0…3000Ω
Converter Type	Sigma-Delta	
Resolution	Input filter and configuration dependent. Refer to the MicroLogix 1200 RTD/Resistance Input Module User Manual, publication number 1762-UM003, for more information.	
Common Mode Rejection	110 dB minimum @ 50 Hz with the 10 or 50 Hz filter selected 110 dB minimum @ 60 Hz with the 10 or 60 Hz filter selected	
Normal Mode Rejection Ratio	70 dB minimum @ 50 Hz with the 10 or 50 Hz filter selected 70 dB minimum @ 60 Hz with the 10 or 60 Hz filter selected	
Non-linearity (in percent full-scale)	±0.05 %	
Typical Accuracy [Autocalibration Enabled] at 25 °C (77 °F) Ambient with Module Operating Temperature at 25 °C (77 °F) (1)	±0.5 °C (°F) for Pt 385 ±0.4 °C (°F) for Pt 3916 ±0.2 °C (°F) for Ni ±0.3 °C (°F) for NiFe ±0.6 °C (°F) for Cu	±0.15Ω for 150Ω range ±0.5Ω for 500Ω range ±1.0Ω for 1000Ω range ±1.5Ω for 3000Ω range

(1) Accuracy is dependent upon the Analog/Digital converter filter rate selection, excitation current selection, data format, and input noise.

Specification	1762-IR4	
Typical Accuracy [Autocalibration Enabled] @ 0…55 °C (32…131 °F)	±0.9 °C (°F) for Pt 385 ±0.8 °C (°F) for Pt 3916 ±0.4 °C (°F) for Ni ±0.5 °C (°F) for NiFe ±1.1 °C (°F) for Cu	±0.25Ω for 150 Ω range ±0.8Ω for 500 Ω range ±1.5Ω for 1000 Ω range ±2.5Ω for 3000 Ω range
Accuracy Drift @ 0…55 °C (32…131°F)	±0.026 °C/°C (0.026 °F/°F) for Pt 385 ±0.023 °C/°C (0.023 °F/°F) for Pt 3916 ±0.012 °C/°C (0.012 °F/°F) for Ni ±0.015 °C/°C (0.015 °F/°F) for NiFe ±0.032 °C/°C (0.032 °F/°F) for Cu	±0.007Ω/°C (0.012Ω/°F) for 150Ω range ±0.023Ω/°C (0.041Ω/°F) for 500Ω range ±0.043Ω/°C (0.077Ω/°F) for 1000Ω range ±0.072Ω/°C (0.130Ω/°F) for 3000Ω range
Repeatability(1)	±0.1 °C (±0.18 °F) for Ni and NiFe ±0.2 °C (±0.36 °F) for other RTD inputs ±0.04Ω for 150Ω resistances ±0.2Ω for other resistances	
Excitation Current Source	0.5 mA and 1.0 mA selectable per channel	
Open-Circuit Detection Time(2)	6…1212 ms	
Channel Update Time	Input filter and configuration dependent. Refer to the MicroLogix 1200 RTD/Resistance Input Module User Manual, publication number 1762-UM003, for more information.	

Specification	1762-IR4
Input Channel Configuration	Via configuration software screen or the user program (by writing a unique bit pattern into the module's configuration file). Refer to your controller's user manual to determine if user program configuration is supported.
Calibration	The module performs autocalibration on channel enable and on a configuration change between channels. You can also program the module to calibrate every five minutes.
Module OK LED	On: module has power, has passed internal diagnostics, and is communicating over the bus. Off: Any of the above is not true.
Channel Diagnostics	Over- or under-range or broken input by bit reporting
Maximum Overload at Input Terminals	±35V DC continuous
Cable Impedance Max.	25Ω (Operating with >25Ω will reduce accuracy.)
Input Impedance	>10 MΩ
Power Supply Distance Rating	6 (The module may not be more than 6 modules away from the controller.)
Channel to Channel Isolation	±10V DC

(1) Repeatability is the ability of the module to register the same reading in successive measurements for the same input signal.

(2) Open-circuit detection time is equal to channel update time for EXC and RTN leads only, Open-circuit detection on SENSE input is performed during Cyclic Lead Calibration (every 5 minutes) and only on those channels where cyclic lead calibration is enabled.

Certifications

Certification (when product is marked)(1)	Value
c-UL-us	UL Listed Industrial Control Equipment, certified for US and Canada. UL Listed for Class I, Division 2 Group A,B,C,D Hazardous Locations, certified for U.S. and Canada. See UL File E334470.
CE	European Union 2004/108/EC EMC Directive, compliant with: EN 61326-1; Meas./Control/Lab., Industrial Requirements EN 61000-6-2; Industrial Immunity EN 61000-6-4; Industrial Emissions EN 61131-2; Programmable Controllers (Clause 8, Zone A & B)
C-Tick	Australian Radiocommunications Act, compliant with: AS/NZS CISPR 11; Industrial Emissions
KC	Korean Registration of Broadcasting and Communications Equipment, compliant with: Article 58-2 of Radio Waves Act, Clause 3

(1) See the Product Certification link at http://www.rockwellautomation.com/products/certification for Declaration of Conformity, Certificates, and other certification details.

North American Hazardous Location Approval

The following modules are North American Hazardous Location approved: 1762-IR4

The following information applies when operating this equipment in hazardous locations:	**Informations sur l'utilisation de cet équipement en environnements dangereux:**
Products marked "CL I, DIV 2, GP A, B, C, D" are suitable for use in Class I Division 2 Groups A, B, C, D, Hazardous Locations and nonhazardous locations only. Each product is supplied with markings on the rating nameplate indicating the hazardous location temperature code. When combining products within a system, the most adverse temperature code (lowest "T" number) may be used to help determine the overall temperature code of the system. Combinations of equipment in your system are subject to investigation by the local Authority Having Jurisdiction at the time of installation.	Les produits marqués "CL I, DIV 2, GP A, B, C, D" ne conviennent qu'à une utilisation en environnements de Classe I Division 2 Groupes A, B, C, D dangereux et non dangereux. Chaque produit est livré avec des marquages sur sa plaque d'identification qui indiquent le code de température pour les environnements dangereux. Lorsque plusieurs produits sont combinés dans un système, le code de température le plus défavorable (code de température le plus faible) peut être utilisé pour déterminer le code de température global du système. Les combinaisons d'équipements dans le système sont sujettes à inspection par les autorités locales qualifiées au moment de l'installation.

WARNING

EXPLOSION HAZARD

- Do not disconnect equipment unless power has been removed or the area is known to be nonhazardous.
- Do not disconnect connections to this equipment unless power has been removed or the area is known to be nonhazardous. Secure any external connections that mate to this equipment by using screws, sliding latches, threaded connectors, or other means provided with this product.
- Substitution of components may impair suitability for Class I, Division 2.
- If this product contains batteries, they must only be changed in an area known to be nonhazardous.
- All wiring must comply with N.E.C. article 501-4(b).
- The interior of the enclosure must be accessible only by the use of a tool.
- For applicable equipment (relay modules, etc.), exposure to some chemicals may degrade the sealing properties of materials used in the following devices: Relays, Epoxy. It is recommended that the User periodically inspect these devices for any degradation of properties and replace the module if degradation is found.

AVERTISSEMENT

RISQUE D'EXPLOSION

- Couper le courant ou s'assurer que l'environnement est classé non dangereux avant de débrancher l'équipement.
- Couper le courant ou s'assurer que l'environnement est classé non dangereux avant de débrancher les connecteurs. Fixer tous les connecteurs externes reliés à cet équipement à l'aide de vis, loquets coulissants, connecteurs filetés ou autres moyens fournis avec ce produit.
- La substitution de composants peut rendre cet équipement inadapté à une utilisation en environnement de Classe I, Division 2.
- S'assurer que l'environnement est classé non dangereux avant de changer les piles.

Additional Resources

Publication	Description
MicroLogix 1200 Programmable Controllers User Manual, publication 1762-UM001.	Information on installing, wiring, and operating a MicroLogix 1200 Programmable Controller
MicroLogix 1200 Programmable Controllers Installation Instructions, publication 1762-IN006.	Installation guide for the MicroLogix 1200 Programmable Controller.
MicroLogix 1200 Memory Module and/or Real Time Clock Installation Instructions, publication 1762-IN001.	Installation guide for the MicroLogix 1200 Memory Module and Real Time clock.
1762-IA8 120V AC Input Module Installation Instructions, publication 1762-IN002.	Installation guide for the 1762-IA8 Discrete Input Module
1762-OW8 Relay Output Module Installation Instructions, publication 1762-IN003.	Installation guide for the 1762-OW8 Discrete Output Module
1762-IQ8 DC Input Module Installation Instructions, publication 1762-IN004.	Installation guide for the 1762-IQ8 Discrete Input Module
Industrial Automation Wiring and Grounding Guidelines, publication 1770-4.1.	More information on proper wiring and grounding techniques.

If you would like a manual, you can:

- download a free electronic version from the internet: http://literature.rockwellautomation.com.
- purchase a printed manual by contacting your local Allen-Bradley distributor or Rockwell Automation representative

Rockwell Automation Support

Rockwell Automation provides technical information on the Web to assist you in using its products. At http://www.rockwellautomation.com/support/, you can find technical manuals, a knowledge base of FAQs, technical and application notes, sample code and links to software service packs, and a MySupport feature that you can customize to make the best use of these tools.

For an additional level of technical phone support for installation, configuration and troubleshooting, we offer TechConnect support programs. For more information, contact your local distributor or Rockwell Automation representative, or visit http://www.rockwellautomation.com/support/.

Installation Assistance

If you experience a problem within the first 24 hours of installation, please review the information that's contained in this manual. You can also contact a special Customer Support number for initial help in getting your product up and running.

United States or Canada	1.440.646.3434
Outside United States or Canada	Use the Worldwide Locator at http://www.rockwellautomation.com/support/americas/phone_en.html, or contact your local Rockwell Automation representative.

New Product Satisfaction Return

Rockwell Automation tests all of its products to ensure that they are fully operational when shipped from the manufacturing facility. However, if your product is not functioning and needs to be returned, follow these procedures.

United States	Contact your distributor. You must provide a Customer Support case number (call the phone number above to obtain one) to your distributor to complete the return process.
Outside United States	Please contact your local Rockwell Automation representative for the return procedure.

Documentation Feedback

Your comments will help us serve your documentation needs better. If you have any suggestions on how to improve this document, complete this form, publication RA-DU002, available at http://www.rockwellautomation.com/literature/.

Allen-Bradley, Rockwell Automation, MicroLogix, and TechConnect are trademarks of Rockwell Automation, Inc.

Trademarks not belonging to Rockwell Automation are property of their respective companies.

Rockwell Otomasyon Ticaret A.Ş., Kar Plaza İş Merkezi E Blok Kat:6 34752 İçerenköy, İstanbul, Tel: +90 (216) 5698400
www.rockwellautomation.com

Power, Control and Information Solutions Headquarters

Americas: Rockwell Automation, 1201 South Second Street, Milwaukee, WI 53204-2496 USA, Tel: (1) 414.382.2000, Fax: (1) 414.382.4444
Europe/Middle East/Africa: Rockwell Automation, Vorstlaan/Boulevard du Souverain 36, 1170 Brussels, Belgium, Tel: (32) 2 663 0600, Fax: (32) 2 663 0640

Publication 1762-IN014B-EN-P - July 2013

Supersedes Publication 1762-IN014B-EN-P - October 2002

Copyright © 2013 Rockwell Automation, Inc. All rights reserved.