Technical Data

Original Instructions

Industrial Computers and Industrial Monitors Specifications

Bulletin Numbers 6176M, 6177R, 6181P, 6181X Series H, 6186M, 6189V, 6200M, 6200P, 6200T

Topic	Page
Summary of Changes	2
Overview	3
VersaView 5200 Thin Clients and 5400 Industrial Computers	7
6177R Non-display Industrial Computers	15
6181P Non-display and Integrated Display Industrial Computers	19
6181X Series H Integrated and Non-display Industrial Computers for Hazardous Locations	25
Industrial Monitors	29
Human Machine Interface Software	39
Accessories	47
Additional Resources	49

Summary of Changes

This publication contains the following new or updated information. This list includes substantive updates only and is not intended to reflect all changes.

Topic	Page
Updated format of front cover and clarified bulletin number 6181X as Series H	1
Corrected "c-UL-us" certification to "cULus"	throughout
Removed reference to obsolete publication Visualization Solutions Selection Guide, publication VIEW-SG001 within About this Document within Overview section	3
Clarified bulletin number 6181X as '6181X Series H' within Table 2, 6177R, 6181P, and 6181X Series H Industrial Computers Comparison	4
Clarified bulletin number 6181X as '6181X Series H' throughout 6181X Series H Integrated and Non-display Industrial Computers for Hazardous Locations section	25
Added Visualization Solutions Selection Guide, publication VIEW-SG002 for Bulletin 6181X Series H and Bulletin 6181P to Additional Resources; updated social media sites	49

About this Document

This document provides technical specifications, environmental specifications, certifications, and dimension drawings for the Allen-Bradley® portfolio of industrial computers and monitors from Rockwell Automation®.

About Rockwell Automation Industrial Computers for Industrial Environments

Rockwell Automation industrial computers for industrial environments offer solutions for the physical limitations and requirements of your environment. Non-display computers provide various options in form factors, RAM, storage, performance, operating temperatures and optical drives. Integrated display computers are available in different screen sizes, storage options, and performance packages.

Our extreme environment computers combine Hazardous Location certifications with the capacity to withstand more extreme temperatures. Industries such as oil and gas, chemicals, and mining involve potentially explosive materials in locations where hardware often succumbs to wear. These industrial computers are designed to endure harsh temperature extremes and are IECEx, ATEX, and UL rated for hazardous locations.

Bulletin Comparison

Use Table 1...Table 2 on page 4 to compare the various industrial computer features available to you.

Table 1 - VersaView 5200 and 5400 Thin Client and Industrial Computers Comparison

Attribute		VersaView Bulletin No. 5200		VersaView Bulletin No. 5400	
		Integrated Display	Non-display	Integrated Display	Non-display
Available Display Sizes, Resolution	12.1 in., 1280 x 800	✓	–	✓	–
	15.6 in., 1366 x 768	✓		✓	
	18.5 in., 1366 x 768	✓		✓	
	21.5 in., 1920 x 1080	✓		✓	
Available Touch Screen	Projective Capacitive (PCAP) Multi-touch Screen	✓	–	✓	–
External Video Connections	DisplayPort	1 x DisplayPort	1 x DisplayPort	1 x DisplayPort	DisplayPort (1)
	VGA	–	1 x VGA	–	VGA (2)
	HDMI	–	–	–	HDMI (3)
Keypad		–	–	–	–
Display Bezel		Glass and Aluminum	–	Glass and Aluminum	–
Package Options		Standard		Standard	
Available Processors		Intel Atom® Quad-core E3845, 1.91 GHz		See Table 10 on page 11	
Primary Storage Media		128 GB multi-level cell, solid-state drive (MLC SSD)		None	
RAM	Type	DDR3, SO-DIMM	DDR3	DDR3, SO-DIMM	DDR3
	Supplied/Max (GB)	4/4	4/4	2/2	1/1, 2/2, or 4/4 (4)
Expansion Slots		None		None	
Available Removable Media		Secure Digital (SD) card slot	None	SD card slot	None
I/O Connectors		9 quantity, see Table 9 on page 10		9 quantity, see Table 10 on page 11	
Available Microsoft Windows® Operating System (OS)	7 Pro SP1 32 bit/64 bit (5)	✓		–	
	WES 7 32 bit/64bit (5)	✓		–	
	10 IoT Enterprise 64 bit	✓		–	
	ThinManager® ready	–		✓	
CompactFlash		None		None	

Table 1 - VersaView 5200 and 5400 Thin Client and Industrial Computers Comparison (Continued)

Attribute		VersaView Bulletin No. 5200		VersaView Bulletin No. 5400	
		Integrated Display	Non-display	Integrated Display	Non-display
Power	12...24V DC	–	✓	–	6200T-NA, 6200T-NAK ✓
	24V DC	✓	–	✓	6200T-KB, 6200T-RC, 6200T-RE ✓
	120...240V AC, 5V DC (6)	–	–	–	6200T-BA ✓
Special Requirements		None		None	
Mounting Options	DIN Rail	–	✓	–	✓
	Legacy 6155R	–	✓	–	✓
	Machine	–	✓	–	✓
	Panel	✓	–	✓	–
	Vertical	–	✓	–	✓
	VESA®	✓	✓	✓	✓

(1) Cat. No. 6200T-RC has three full-sized DisplayPorts. Cat. No. 6200T-RE has three full-sized DisplayPorts and four mini-DisplayPorts. All other thin client models have one DisplayPort.
(2) Only Cat. No. 6200T-NA and Cat. No. 6200T-NAK thin client models have a VGA port.
(3) Only Cat. No. 6200T-KB thin client has an HDMI port.
(4) The following memory is supplied/max: 1/1 GB for Cat. No. 6200T-NA and 6200T-NAK; 2/2 GB for Cat. No. 6200T-BA; 4/4 GB for Cat. Nos. 6200T-KB, 6200T-RC, and 6200T-RE.
(5) 32-bit images for these Microsoft Windows OSs are available from rok.auto/pcdc.
(6) You must use the 100...240V AC, 50...60 Hz, 1.2 A input, 5V DC, 4 A power supply with barrel connector that is supplied with this thin client model.

Table 2 - 6177R, 6181P, and 6181X Series H Industrial Computers Comparison

Attribute		Bulletin No. 6177R Non-display (750R & 1450R)	Bulletin No. 6181P Integrated Display (NDM, 1200P, 1500P, 1700P, and 1900P)	Bulletin No. 6181X Series H for Hazardous Locations (1200XT)
Available Display Sizes, Resolution	Non-display Option (NDM)	Requires external monitor	✓	✓
	12.1 in., 1280 x 800		✓	✓
	15 in. (1), 1024 x 768 or 1366 x 768		✓	–
	17 in., 1280 x 1024		✓	–
	19 in. (1), 1280 x 1024 or 1366 x 768		✓	–
Available Touch Screens		None	Performance: Resistive Advanced: PCAP (1)	Resistive, sunlight readable PCAP, sunlight readable (2)
Keypad		None	None	None
Display Bezel		None	Aluminum or stainless-steel	Aluminum
Package Options (3)	Advanced	✓	–	–
	Performance	✓	✓	✓
	Server	✓	✓	–
Available Processors		Intel® Core™ i3-2120 or Intel Core i5-2400	Performance: Intel Core i3-4102E Advanced: Intel Core i7-4700EQ	Intel Core i3-5010U
Primary Storage Media	Hard Drive	500 GB, 3.5-in. SATA (4) or 1 TB, 3.5-in. SATA (5)	–	–
	Solid-state drive (SSD)	–	32 GB SLC™, 2.5-in. SATA or 256 GB MLC, 2.5-in.	128 GB MLC, 2.5-in. (6)
RAM	Type	DDR3	DDR3	DDR3
	Supplied/Max (GB)	4 or 8/32	Performance: 4/16 Advanced: 8/16	8/16
Expansion Slots		1 or 4 PCI 1 PCI Express x16 1 PCI Express x4 1 PCI Express x1	1 half-length PCI Express x8 (7)	1 half-length PCIe x1
Available Removable Media		DVD-RW optical disk drive (ODD)	CompactFlash Performance: None supplied, but can be added via the 6189V-ODD kit Advanced: DVD-RW/CD-RW	CompactFlash
I/O Connectors		9 quantity; see page Table 13 on page 16	Up to 16 quantity; see Table 18 on page 21 and Table 19 on page 22	10 quantity; see page Table 24 on page 27.

Table 2 - 6177R, 6181P, and 6181X Series H Industrial Computers Comparison (Continued)

Attribute		Bulletin No. 6177R Non-display (750R & 1450R)	Bulletin No. 6181P Integrated Display (NDM, 1200P, 1500P, 1700P, and 1900P)	Bulletin No. 6181X Series H for Hazardous Locations (1200XT)
Available Microsoft Windows® OS	10 IoT Enterprise (64 bit)	✓	✓	✓
	7 Professional (64 bit) SP1	✓	✓	✓
	8.1 Industry Pro (64 bit)	✓	✓	–
	Embedded Standard 7 (64 bit) SP1	–	✓	–
	Embedded Standard 2009	–	✓	–
	Server 2008 R2 (64 bit) SP1	✓	✓ (8)	–
	Server 2012 R2 (64 bit)	✓	–	–
CompactFlash		None	1/Type II	1/Type II
Power		AC	DC	AC or DC
Special Requirements		0...50 °C (32...122 °F)	Model dependent: 0...55 °C (32...131 °F) or 0...50 °C (32...122 °F)	Rated to 70 °C (158 °F) for cULus hazardous, ATEX, INMETRO, and IECEx locations Preferred monitor: 6186M hazardous location monitor
Mounting Options	4U rack mount	1450R	–	–
	Bookshelf (9)	–	✓	–
	Machine Mount (9)	750R	✓	–
	Panel Mount: Integrated Display	–	✓	✓
	Table Mount (10)	–	✓	–
	Wall Mount: Non-display	–	✓	✓

(1) Some advanced models are also available in widescreen formats (16:9 aspect ratio) which have projective capacitive (PCAP) touch screens.
(2) PCAP touch screen applies only to Cat. No. 6181X-12P2SWX1D.
(3) Package option determines processor type, amount of RAM, type of removable media, number of external connectors or I/O, and type of expansion slots.
(4) RAID 1 enabled server models ship with two 500 GB hard drives (HDDs).
(5) Available only as an accessory (Cat. No. 6189V-35HDD1TB).
(6) Upgradeable to 256 GB MLC SSD (Cat. No. 6189X-256GBSSD).
(7) Upgradeable to 1 PCI, 2 PCI, 2 PCIe x4, or 1 PCIe x4 + 1 PCI with separate PCI riser kits.
(8) Cat. No. 6181P-00N3MS81DC and 6181P-00N3MS81AC ship with this Windows operating system (OS), which are the only two models that are meant for RAID configuration.
(9) Upgradeable to 1 PCI, 2 PCI, 2 PCIe x4, or 1 PCIe x4 + 1 PCI with separate PCI riser kits.
(10) Applies only to series F NDM models. The bookshelf mount requires a bracket (Cat. No. 6189V-BOOKBRKT), which is sold separately.

Notes:

Overview

The Allen-Bradley VersaView® 5000 portfolio is a line of industrial computers and thin clients that can be used for standalone machine-level and distributed HMI applications. The open architecture supports modern operating systems and various software applications, including FactoryTalk® View SE software for distributed applications. The line is fanless and lowers maintenance cost to reduce costly machine downtime.

The VersaView 5400 integrated display computers have an edge-to-edge, all glass, ten-point multi-touch screen that can also be operated with gloves. The touch screens are precalibrated so that recalibration is not necessary. All non-display computers perform the same as the integrated display computers, in a compact design that supports multiple mounting options.

The VersaView 5200 ThinManager® Thin Clients work exclusively with ThinManager software for centrally managed content delivery. Integrated display and non-display versions are available.

Some of the VersaView 5400 industrial computers and the dual display VersaView 5200 Thin Client can be used in harsh locations that are found in the oil and gas, tire and rubber, and pulp and paper industries. Some models are also available with conformal coating, which helps protect product circuitry from environmental stresses like moisture, fungus, dust, and corrosion. See Table 4 on page 8 for the VersaView 5000 models available for hazardous locations.

Technical Data

Table 3 - Environment Specifications: VersaView 5200 Thin Clients and 5400 Industrial Computers

Attribute		Bulletin No. 5200 Integrated Display Thin Clients	Bulletin No. 5400 Integrated Display Industrial Computers	Bulletin No. 5200 Non-display Thin Clients	Bulletin No. 5400 Non-display Industrial Computers
Temperature	Operating	0...50 °C (32...122 °F)	0...50 °C (32...122 °F)	6200T-BA: 0...50 °C (32...122 °F) 6200T-KB: 0...55 °C (32...131 °F) 6200T-NA, -NAK: -20...+60 °C (-4...+140 °F) 6200T-RC, -RE: 0...45 °C (32...113 °F)	-20...+60 °C (-4...+140 °F
	Nonoperating	-20...+60 °C (-4...+140 °F)			
Relative Humidity		10...90% noncondensing			
Shock	Operating	15 g (1/2 sine, 11 ms)			
	Nonoperating	30 g (1/2 sine, 11 ms)			
Vibration	Operating	0.012 in. p-p, 10...57 Hz, 2 g peak, 57...640 Hz			
	Nonoperating	0.012 in. p-p, 10...57 Hz, 2 g peak, 57...640 Hz			
Altitude	Operating	Sea level to 3000 m (9842 ft)		Sea level to 2000 m (6562 ft)	
	Nonoperating	Sea level to 4572 m (15,000 ft)		Sea level to 10,000 m (32,810 ft)	
Enclosure Ratings		IEC 60529, IP65		IP20	

IMPORTANT
- Attributes that are listed in Table 4 apply only to the VersaView 5000 thin client and industrial computers for hazardous locations (pertinent catalog numbers are listed in this table) and are required to be mounted in a restricted access location.
- The supplied rubber foot pads cannot be used as a mounting method in hazardous locations for the following catalog numbers: 6200P-NS3x1, 6200P-NS3x1K, 6200P-NS3C6, 6200T-NA, and 6200T-NAK.

WARNING: Conditions for Safe Use: Table 4 applies to VersaView 5000 thin client and industrial computers for hazardous locations:
- The equipment must only be used in an area of not more than Pollution Degree 2, as defined in EN 60664-1.
- The equipment must be installed in a tool-only accessible enclosure that provides a degree of protection not less than IP54 in accordance with EN 60079-0.
- Transient protection shall be provided that is set at a level not exceeding 140% of the peak rated voltage value at the supply terminals to the equipment.
- The internal enclosure ambient temperature range is -20...+60 °C (-4...+140 °F).

Table 4 - Hazardous Location Ratings by Region: VersaView 5000 Hazardous Location Thin Clients and Industrial Computer

5200 Thin Client Non-display Models Cat. No. 6200T- (1)	5400 Industrial Computers, Integrated Display Models Cat. No. 6200P-	Region	Rating	Temperature Range
NA, NAK	NS3A1, NS3A1K, NS3B1, NS3B1K, NS3C1, NS3C1K, NS3C6	United States	Class I Division 2, Groups A, B, C, D T4	-20 °C ≤ Ta ≤ +60 °C (-4 °F ≤ T a ≤ +140 °F)
			Class I Zone 2, IIC, T4	
		Canada	Class I Division 2, Groups A, B, C, D T4	
			Class I Zone 2, IIC, T4	
		Europe (ATEX)	II 3 G, Ex ec IIC T4 Gc, DEMKO 19 ATEX 2252 X	

(1) VersaView Cat. Nos. with a K suffix (for example, 6200T-NAK) designate models with conformal coating.

Table 5 - Power Specifications: VersaView 5200 Thin Client Models

Customer Loading	Attribute	Non-display Models, Cat. No. 6200T-					Integrated Display Models, Cat. No. 6200T-			
		BA	KB	NA, NAK	RC	RE	12.1 in.	15.6 in.	18.5 in.	21.5 in.
Typical (1)	Input power (W) (2)	3.9	11.3	4.5	29.5	43.7	24.5	23.8	24.2	34
	Heat dissipation (BTU/hr)	13.3	38.5	15.3	100.6	146.7	83.6	81.2	82.6	126.2
Minimum (3)	Input power (W) (2)	6.9	22	4.9	35	80.9	36.7	35.3	35.8	45.4
	Heat dissipation (BTU/hr)	23.5	75	16.7	119.4	276	125.2	120.4	122.1	155

(1) Typical load is defined as: The system is running Passmark Burn-in at 30% load with USB mouse and USB loop-backs, VGA, and DisplayPort used, and both Ethernet ports being use.
(2) Input voltage is 24V DC except for 6200T-BA, which is 100...240V AC, 1.2 A input. Wattage (W) values are measurements and can differ from the maximum rating required by UL.
(3) Maximum load is defined as: The system is running Passmark Burn-in at 100% load with USB mouse, USB dummy loads, VGA, and DisplayPort used, and both Ethernet ports being used.

Table 6 - Power Specifications: VersaView 5400 Industrial Computer Models

Customer Loading	Attribute	Non-display Models	Integrated Display Models			
			12.1 in.	15.6 in.	18.5 in.	21.5 in.
Typical (1)	Input Power (W) (2)	12.8	24.5	23.8	24.2	34
	Heat Dissipation (BTU/hr)	43.9	83.6	81.2	82.6	126.2
Maximum (3)	Input Power (W) (2)	19.7	36.7	35.3	35.8	45.4
	Heat Dissipation (BTU/hr)	67.2	125.2	120.4	122.1	155

(1) Typical load is defined as the system is running Passmark Burn-in at 30% load with USB mouse and USB loop-backs, VGA, and DisplayPort used, and both Ethernet ports being used
(2) Input voltage is 24V DC except the non-display model (NDM), which is 12...24V DC. Wattage values are measurements, and can differ from the maximum ratings required by UL.
(3) Maximum load is defined as the system is running Passmark Burn-in at 100% load with USB mouse, USB placeholder loads, VGA, and DisplayPort used, and both Ethernet ports being used.

Table 7 - Input Power Specifications: VersaView 5200 Thin Client and 5400 Industrial Computer Models

Attribute	Non-display Models						Integrated Display Models			
	6200P-	6200T-								
	NS3x1, NS3x1K, NS3C6	BA (1)	KB	NA, NAK	RC	RE	12.1 in.	15.6 in.	18.5 in.	21.5 in.
Input Voltage	12...24V DC	5V DC	24V DC	12...24V DC	24V DC		24V DC			
Input Power, Max	4.25...2.125 A SELV	2.2 A SELV	1.25 A SELV	4.25...2.125 A SELV	2.8 A SELV	3.4 A SELV	3 A SELV/LPS		3.5 A SELV/LPS	

(1) You must use the 100...240V AC, 50...60 Hz, 1.2 A input, 5V DC, 4 A power supply with barrel connector that is supplied with this thin client model.

Table 8 - Certifications: VersaView 5200 and 5400 Industrial Computers

Certification		Certification Information
cULus		For the most current certification information, use "5200-CT" or "5400-CT" as the search criteria from rok.auto/certifications.
CE		
EAC		
FCC, Class A Emissions		
KC		
RCM		
RoHS	European RoHS 2011/65/EU	
	Türkiye RoHS (EEE Yönetmeliğine Uygundur. In Conformity with the EEE Regulation)	
	China RoHS	see Figure 1

Figure 1 - RoHS: China RoHS

部件名称 Part Name	有毒有害物质或元素 Toxic or Hazardous Substances and Elements					
	铅 Lead (Pb)	汞 Mercury (Hg)	镉 Cadmium (Cd)	六价铬 Hexavalent Chromium (Cr(VI))	多溴联苯 Polybrominated Biphenyls (PBB)	多溴二苯醚 Polybrominated Diphenyl Ethers (PBDE)
壳体 Housing	X	0	0	0	0	0
显示 Display	X	0	0	0	0	0
印刷电路板 Printed Circuit Board	X	0	0	0	0	0
金属螺帽 Metal Fasteners	X	0	0	0	0	0
电缆组装 Cable Assembly	X	0	0	0	0	0
风扇组装 Fan Assembly	X	0	0	0	0	0
电力供应组装 Power Supply Assemblies	X	0	0	0	0	0
电池 Battery	0	0	0	0	0	0

本表格依据SJ/T11364 的规定编制。
This table is made per guidance of SJ/T 11364.

0: 表示该有害物质在该部件所有均质材料中的含量均在GB/T26572 规定的限量要求以下。
0: Indicates that this toxic or hazardous substance contained in all of the homogeneous materials for the part is below the limit requirement in GB/T 26572.

X: 表示该有害物质至少在该部件的某一均质材料中的含量超出GB/T26572 规定的限量要求。
求。（企业可在此处，根据实际情况对上表中打"×"的技术原因进行进一步说明。）
X: Indicates that this toxic or hazardous substance contained in at least one of the homogeneous materials for the part is below the limit requirement in GB/T 26572.

Table 9 - Technical Specifications: VersaView 5200 Thin Client Models

Attribute		Non-display Models, Cat. No. 6200T-				Integrated Display Models			
		BA	NA, NAK	KB	RC, RE	12.1 in.	15.6 in.	18.5 in.	21.5 in.
Display Type		–				Color active-matrix TFT flat-panel			
Display Size, Diagonal [in. (mm)]		–				12.1 (307)	15.6 (396)	18.5 (470)	21.5 (546)
Display Aspect Ratio		–				16:9			
Display Resolution, Max		–				1280 x 800	1366 x 768	1366 x 768	1920 x 1080
Response Time		–				10 ms	8 ms	5 ms	25 ms
Touch Screen		–				PCAP multi-touch			
Bezel		–				Edge-to-edge glass with aluminum ring			
Available Processors	Intel Model	Atom® E3815		Atom x7-E3950	Core i5-7500T	Atom E3815			
	Speed	1.46 GHz		1.60 GHz	2.70 GHz	1.46 GHz			
CPU core		Single	Single	Quad	Quad	Single			
RAM	Type	DDR3	DDR3 (1)	DDR3	DDR3	DDR3, SO-DIMM			
	Supplied/Max (GB)	2/2	1/1	4/4	4/4	4/4			
Available Storage Drives		–				–			
Expansion Slots		–				–			
Available Optical Storage Device		–				–			
CompactFlash Type		–				–			
SD Slot		–				1 full-size SDHC™			
I/O Connections	USB 2.0 Type A	3	2	2	4 (2)	–			
	USB 3.0 Type A	1	1	4	2	–			
	Ethernet RJ45 LAN	1, 1 GB	2, 1 GB each	2, 1 GB each	3, 1 GB each	2, 1 GB each			
	RS-232 DB9 Port	–	1	1	2	1			
	Analog Audio Input	–	–	–	1 (3)	–			
	Analog Audio Output	1	–	–	1	–			
	Microphone Output	–	–	–	1 (3)	–			
External Video Connections, Max Resolution	Full DisplayPort	1 x 2560 x 1600 (4)	1 x 2560 x 1600 (4)	1 x 3840 x 2160 (4) (5)	3 x 3840 x 2160 (4)	1 x 2560 x 1600 (4)			
	Mini DisplayPort	–	–	–	4 x, 3840 x 2160 (4) (6)	–			
	VGA	–	1 x, 1920 x 1440	–		–			
	HDMI	–	–	1 x, 3840 x 2160 (4)		–			
Available OS		ThinManager software ready				ThinManager software ready			
Approximate Weight [kg (lb)]		0.95 (2.1)	1.78 (3.93)	1.76 (3.88)	6200T-RC: 5.22 (11.5) 6200T-RE: 4.96 (10.93)	5.0 (11.02)	5.9 (13)	8.3 (18.29)	9.5 (20.94)
Approximate Dimensions		See Figure 2 on page 12				See Figure 3 on page 13			
Cutout Dimensions [mm (in.)]		–				250 x 312 (9.84 x 12.28)	282 x 398 (11.1 x 15.67)	321 x 464 (12.64 x 18.27)	357 x 529 (14.06 x 20.83)
Mounting Options (7)	Book mount	✓	✓	–	–	–			
	DIN Rail	✓	✓	–	–	–			
	Legacy	–	✓	–	–	–			
	Machine Mount	–	–	✓	✓	–			
	Panel Mount	–	–	–	–	✓ (IP65)			
	VESA	✓	–	✓	–	✓ (IP20)			

(1) Soldered.
(2) There are two USB ports on the front and two USB ports on the back side of these thin client models.
(3) Audio input is not currently supported with ThinManager software.
(4) Audio output/line out is supported. For more information, see Knowledgebase article 1083757 from the Rockwell Automation Support site.
(5) These full DisplayPorts support 4K resolutions.
(6) Only Cat. No. 6200T-RE includes four mini DisplayPorts. Cat. No. 6200T-RC does not include mini DisplayPorts.
(7) Cat. No. 6200T-RC and 6200T-RE are not shipped with a book mount bracket installed. All other non-display 5200 thin client models ship with a mount bracket pre-installed. All other mounting methods require an optional mounting bracket that must be ordered separately.

Table 10 - Technical Specifications: VersaView 5400 Computers

Attribute		Non-display	Integrated Display Models			
			12.1 in.	15.6 in.	18.5 in.	21.5 in.
Display Type		–	Color active-matrix TFT flat-panel			
Display Size, Diagonal [in. (mm)]		–	12.1 (307)	15.6 (396)	18.5 (470)	21.5 (546)
Display Aspect Ratio		–	16:9			
Display Resolution, Max		–	1280 x 800	1366 x 768	1366 x 768	1920 x 1080
Response Time		–	10 ms	8 ms	5 ms	25 ms
Touch Screen		–	PCAP multi-touch			
Bezel		–	Edge-to-edge glass with aluminum ring			
Available Processors		Intel quad-core Atom E3845, 1.91 GHz	Intel quad-core Atom E3845, 1.91 GHz			
RAM	Type	DDR3 (1)	DDR3, SO-DIMM			
	Supplied/Max (GB)	4/4	4/4			
Available Storage Drives		1 x 128 GB, 2.5 in. SATA MLC SSD	1 x 128 GB, 2.5 in. SATA MLC SSD			
Expansion Slots		–	–			
Available Optical Storage Device		–	–			
CompactFlash Type		–	–			
SD Slot		1 full-size SDHC	1 full-size SDHC			
I/O Connections	RS-232, DB9 Port	1	1			
	Ethernet RJ45 LAN Port	2 x, 1 GB each	2 x, 1 GB each			
External Video Connections, Max Resolution	DisplayPort	1 x, 2560 x 1600	1 x, 2560 x 1600			
	VGA	1 x, 1920 x 1440	–			
Available OS (2)	Windows 10 IoT Enterprise (64 bit) (3)	✓	✓			
	Windows 7 Pro (64 bit) SP1 (4)	✓	✓			
	WES 7 (64 bit)	✓	✓			
Approximate Weight [kg (lb)]		1.78 (3.93)	5.0 (11.02)	5.9 (13)	8.3 (18.29)	9.5 (20.94)
Approximate Dimensions		See Figure 2 on page 12	See Figure 3 on page 13			
Cutout Dimensions [mm (in.)]		–	250 x 312 (9.84 x 12.28)	282 x 398 (11.1 x 15.67)	321 x 464 (12.64 x 18.27)	357 x 529 (14.06 x 20.83)
Mounting Options (5)	Book mount	✓	–			
	DIN Rail	✓	–			
	Legacy	✓	–			
	Machine Mount	✓	–			
	Panel Mount	–	✓ (IP65)			
	VESA	✓	✓ (IP20)			

(1) Soldered.
(2) Cat. No. 6200P-NS3C6 uses FactoryTalk® Analytics™ software instead of a Microsoft Windows OS.
(3) Audio output/line out supported.
(4) 32-bit images for these Windows operating systems (OSs) are available from rok.auto/pcdc.
(5) All 5400 non-display models are shipped with a bookshelf mounting bracket installed. All other mounting methods require an optional mounting bracket that must be ordered separately.

For Figure 2:

- Approximate dimensions are in millimeters (inches). Dimensions are not for manufacturing purposes.
- Add 2.6 mm (0.1 in.) to the height if you install the supplied rubber foot pads in a non-hazardous location. Rubber footpads can only be used in a non-hazardous location.

Figure 2 - Approximate Dimensions [mm (in.)]: VersaView 5200 and 5400 Non-display

Cat. No. 6200T-BA

Without the Factory-installed Vertical Mounting Plate

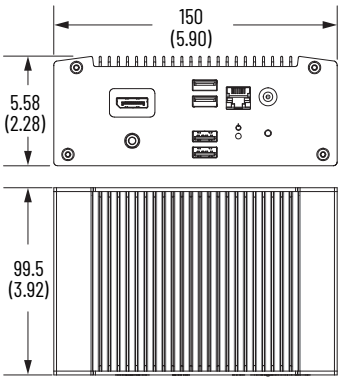

With the Factory-installed Vertical Mounting Plate

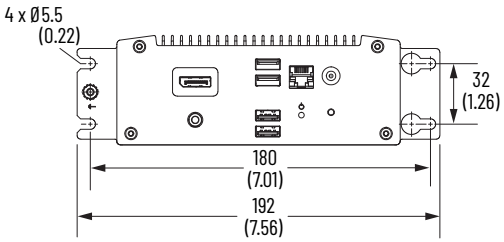

Cat. No. 6200T-KB, 6200T-NA, 6200T-NAK, 6200P-NS3x1, 6200P-NS3x1K, and 6200P-NS3C6

(Cat. No. 6200T-KB is shown in illustration)

Without the Factory-installed Vertical Mounting Plate

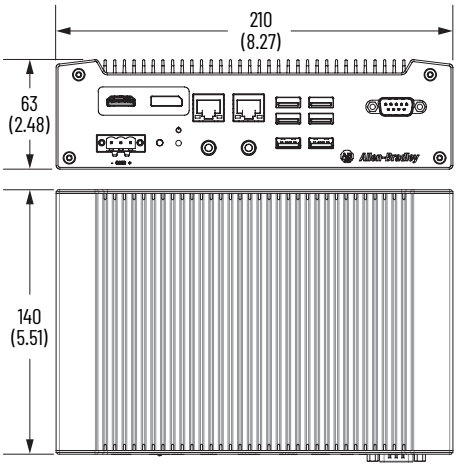

With the Factory-installed Vertical Mounting Plate

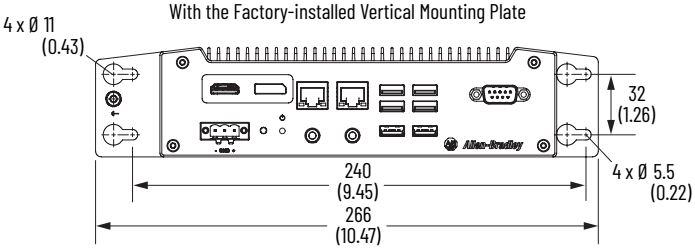

Cat. Nos. 6200T-RC and 6200T-RE

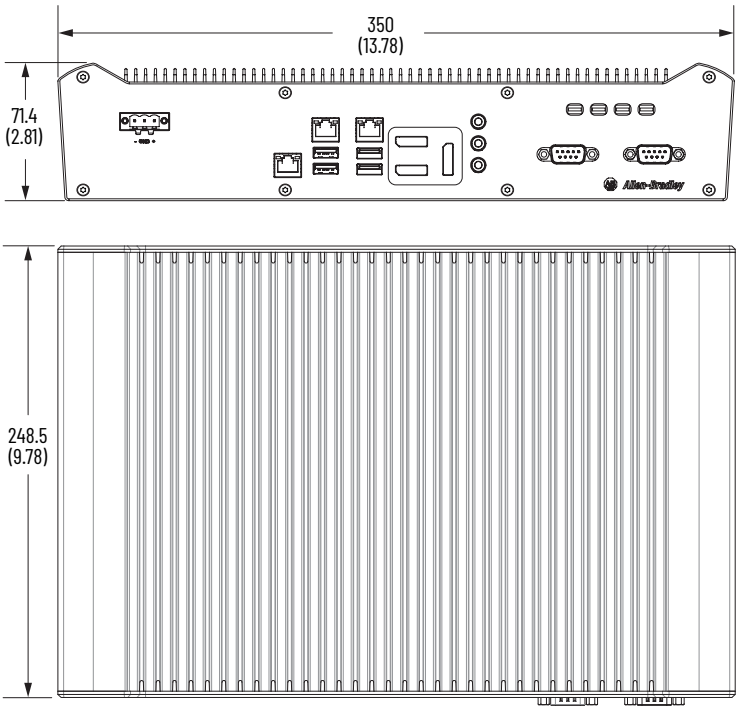

For Figure 3:
- Approximate dimensions are in millimeters (inches). Dimensions are not for manufacturing purposes.

Figure 3 - Approximate Dimensions [mm (in.)]: VersaView 5200 and 5400 Integrated Display

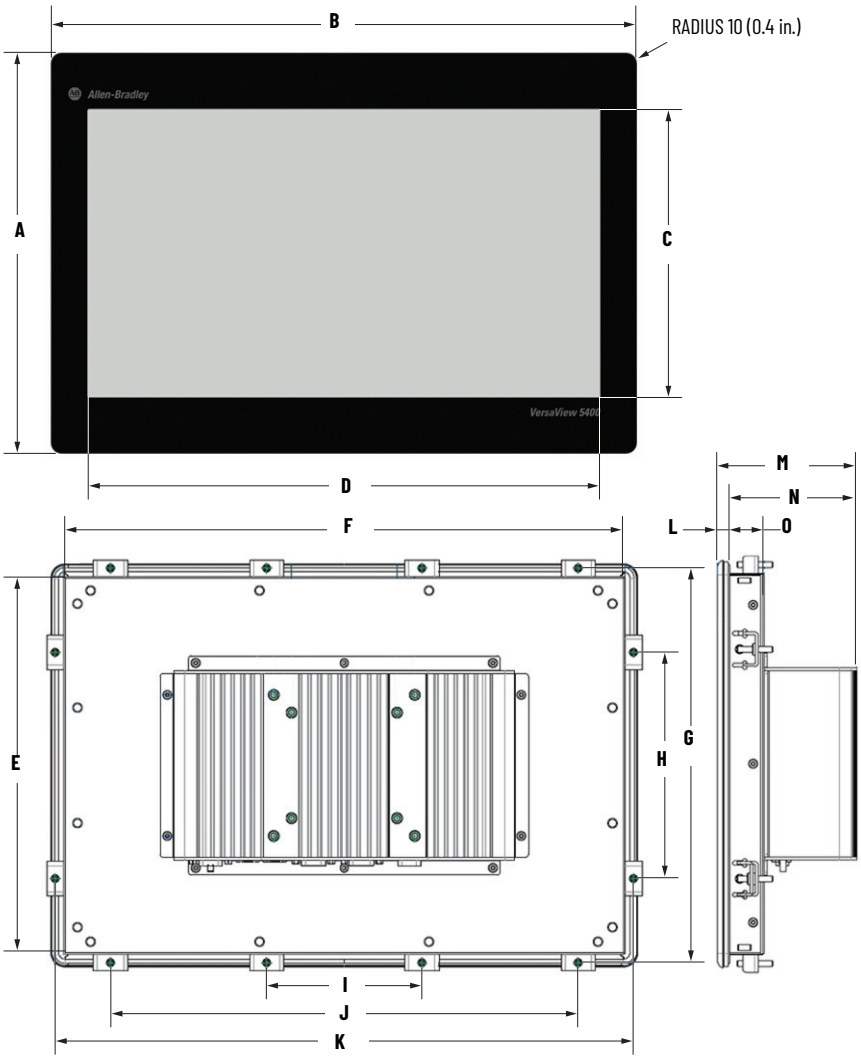

Display Size	Approximate Dimensions [mm (in.)]														
	A	B	C	D	E	F	G	H	I	J	K	L (1)	M (2)	N	O
12.1 in.	266 (10.47)	328 (12.91)	163.2 (6.43)	261 (10.28)	248 (9.76)	310 (12.2)	260 (10.24)	125 (4.92)	200 (7.87)	–	322.5 (12.7)	7.6 (0.3)	97.1 (3.82)	89.5 (3.52)	24.5 (0.97)
15.6 in.	298 (11.73)	414 (16.3)	193.5 (7.61)	344.2 (13.55)	280 (11)	396 (15.6)	292 (11.5)	160 (6.3)	110 (4.33)	330 (13)	408 (16)				
18.5 in.	337 (13.27)	480 (18.9)	230 (9.07)	410 (16.13)	319 (12.56)	462 (18.19)	331 (13.03)	250 (9.84)	130 (5.12)	390 (15.35)	474 (18.66)				
21.5 in.	373 (14.68)	545 (21.46)	268 (10.55)	476.6 (18.76)	355 (14)	527 (20.75)	367 (14.45)	250 (9.84)	150 (5.91)	450 (17.71)	539 (21.22)				

(1) Tolerance is +/- 0.5 mm (+/- 0.02 in.).
(2) Tolerance is +/- 1.0 mm (+/- 0.04 in.).

Notes:

Overview

Bulletin No. 6177R non-display industrial computers take advantage of the second-generation Intel® Core™ processors to provide powerful platforms that are suited with excellent reliability for industrial environments.

These industrial computers are available in rugged machine-mount and rack-mount form factors and offer powerful remote management, onboard backup/restore, and integrated diagnostic capabilities.

750R Model 1450R Model

Technical Specifications

Table 11 - Environment Specifications: 6177R Non-display Industrial Computers

Attribute			Value
Temperature	Operating		0...50 °C (32...122 °F)
	Nonoperating		-20...+60 °C (-4...+140 °F)
Relative Humidity			10...90% noncondensing
Vibration	Operating		0.006 in. p-p 10...57 Hz, 1 g peak at 57...640 Hz
	Nonoperating		0.012 in. p-p 10...57 Hz, 2 g peak at 57...640 Hz
Shock	Operating		15 g (1/2 sine, 11 ms)
	Nonoperating		30 g (1/2 sine, 11 ms)
Acoustic Noise	Idle	750R	44.3 dB at 50 cm
		1450R	46.6 dB at 50 cm
	Maximum	750R	63.4 dB at 50 cm
		1450R	64.4 dB at 50 cm

Table 12 - Certifications: 6177R Non-display Industrial Computers

Certification		Certification Information
cULus		For the most current certification information, use "6177R-CT" as the search criteria from rok.auto/certifications.
CE		
EAC		
FCC, Class A Emissions		
KC		
RCM	Emissions standards: AS/NZS CISPR 22 Class A	
RoHS	European RoHS 2011/65/EU	
	Türkiye RoHS (EEE Yönetmeliğine Uygundur. In Conformity with the EEE Regulation)	
	China RoHS	see Figure 4

Figure 4 - RoHS: China RoHS

部件名称 Part Name	有毒有害物质或元素 Toxic or Hazardous Substances and Elements					
	铅 Lead (Pb)	汞 Mercury (Hg)	镉 Cadmium (Cd)	六价铬 Hexavalent Chromium (Cr(VI))	多溴联苯 Polybrominated Biphenyls (PBB)	多溴二苯醚 Polybrominated Diphenyl Ethers (PBDE)
壳体 Housing	X	0	0	0	0	0
显示 Display	X	0	0	0	0	0
印刷电路板 Printed Circuit Board	X	0	0	0	0	0
金属螺帽 Metal Fasteners	X	0	0	0	0	0
电缆组装 Cable Assembly	X	0	0	0	0	0
风扇组装 Fan Assembly	X	0	0	0	0	0
电力供应组装 Power Supply Assemblies	X	0	0	0	0	0
电池 Battery	0	0	0	0	0	0

本表格依据SJ/T11364 的规定编制。
This table is made per guidance of SJ/T 11364.

0: 表示该有害物质在该部件所有均质材料中的含量均在GB/T26572 规定的限量要求以下。
0: Indicates that this toxic or hazardous substance contained in all of the homogeneous materials for the part is below the limit requirement in GB/T 26572.

X: 表示该有害物质至少在该部件的某一均质材料中的含量超出GB/T26572 规定的限量要求。
求。（企业可在此处，根据实际情况对上表中打“×”的技术原因进行进一步说明。）
X: Indicates that this toxic or hazardous substance contained in at least one of the homogeneous materials for the part is below the limit requirement in GB/T 26572.

Table 13 - Technical Specifications: 6177R Non-display Industrial Computers

Attribute		750R	1450R
Display type		Requires external monitor	
Available Operating Systems (OS)	Performance	Microsoft Windows 10 IoT Enterprise (64 bit), Windows 7 Professional (64 bit) SP1, or no OS	
	Advanced	Windows 10 IoT Enterprise (64 bit), Windows Embedded 8.1 Industry Professional, or Windows 7 Professional (64 bit) SP1	
	Server	Windows Server® 2012 Standard R2, Windows Server 2008 R2 SP1, or no operating system	
Processor	Performance	Intel Core i3-2120, 3.3 GHz	
	Advanced	Intel Core i5-2400, 3.1 GHz	
	Server	Intel Core i5-2400, 3.1 GHz	
Ethernet LAN		2 ports, 10/100/1000 Mbps	
RAM Memory	Performance	4 GB DDR3, 32 GB max	
	Advanced	8 GB DDR3, 32 GB max	
	Server	8 GB DDR3, 32 GB max	
Storage Drive (1)	Performance	(1) 500 GB, 3.5-in. SATA hard drive	
	Advanced	(1) 500 GB, 3.5-in. SATA hard drive	
	Server	(2) 500 GB, 3.5-in. SATA hard drive	
RAID 1 Enabled	Performance	No	
	Advanced	No	
	Server	Yes	
RAID Capabilities		RAID 0 or RAID 1 with second hard drive installed and RAID array is configured	
Optical Disk Drive (ODD)		DVD-RW	
Expansion Slots		1 PCI (750R) or 4 PCI (1450R) 1 PCI Express x16 1 PCI Express x4 1 PCI Express x1	
I/O Ports	PS/2™ Keyboard Port	1 quantity	
	PS/2 Mouse Port	1 quantity	
	Serial Port	2 quantity	
	Parallel Port	1 quantity	
	Ethernet LAN Ports	2 quantity, 1 GB each	
	USB 2.0	7 quantity: 4 rear, 2 front, 1 internal	
	USB 3.0	2 quantity: 1 rear and 1 front	
	eSATAp	1 quantity: (5V, 500 mA)	
	DVI	2 quantity (DVI-1, DVI-D); DVI-1 port converts to VGA with supplied adapter	
	Audio	3 quantity: audio line in, audio line out and microphone	

Table 13 - Technical Specifications: 6177R Non-display Industrial Computers (Continued)

Attribute		750R	1450R
Input Voltage, AC		100...240V, autoranging	
Line Frequency		50...60 Hz	
Power Consumption, AC		10 A at 100V rms, 5 A at 240V rms	
Approximate Weight [kg (lb)]		13.8 kg (30.36 lb)	14.0 kg (30.80 lb)
Approximate Dimensions		See Figure 5 on page 17.	
Mounting Options	4U Rack Mount	–	✓
	Machine Mount	✓	–

(1) A 1 TB, 3.5-in. SATA hard drive is available as an accessory (cat. no. 6189V-35hard drive1TB) for all 750R and 1450R non-display industrial computer models.

Figure 5 - Approximate Dimensions: 6181X Industrial Computers for Hazardous Locations

Approximate dimensions are in millimeters (inches). Dimensions are not for manufacturing purposes.

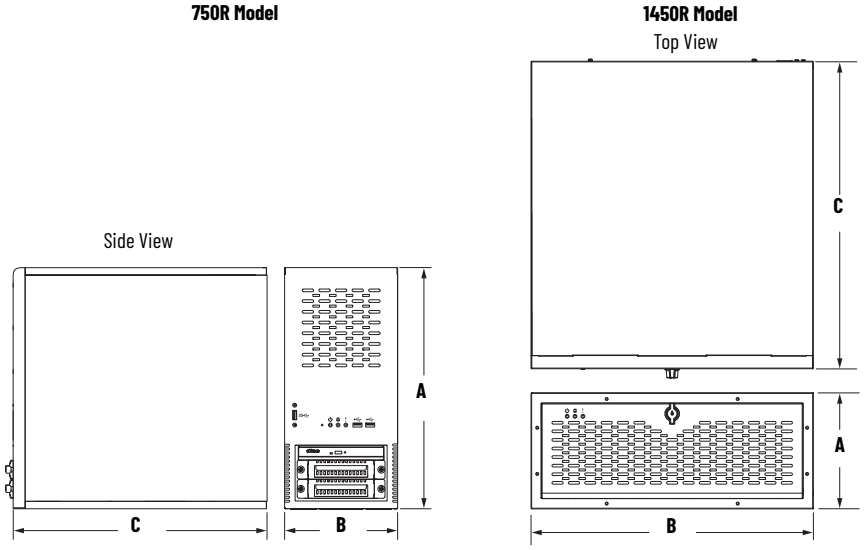

Model	A	B	C
750R	360 (14.17)	170 (6.69)	381 (15.01)
1450R	176 (6.93)	431 (16.97)	465 (18.31)

Notes:

Overview

Bulletin No. 6181P non-display and integrated display industrial computers serve as the foundation for visualization control with various display sizes, models, and mounting methods. Display sizes are offered in both standard (4:3 and 5:4) and widescreen (16:9) format.
All 6181P industrial computer models feature solid-state drives (SSDs) for performance in storage reliability. Various mounting methods are possible with these computers in landscape and portrait orientations, and a space-saving book mount option on non-display versions.

The complete Rockwell Automation advantage includes seamless integration with the full suite of Rockwell Software® solutions, including Integrated Architecture® and FactoryTalk® View software.

6181P Integrated Display Industrial Computer

6181P Non-display Industrial Computer

Technical Data

Table 14 - Environment Specifications: 6181P Non-display and Integrated Display Industrial Computers

Attribute			Advanced	Performance
Temperature	Operating	NDM (non-display)	—	0...55 °C (32...131 °F)
		1200	—	
		1500, Standard Screen	0...55 °C (32...131 °F)	0...55 °C (32...131 °F)
		1500, Widescreen	0...50 °C (32...122 °F)	
		1700	0...55 °C (32...131 °F)	
		1900	0...50 °C (32...122 °F)	0...50 °C (32...122 °F)
	Nonoperating		-20...+60 °C (-4...+140 °F)	
Relative humidity			10...90% noncondensing at 50%	
Shock (1) (2)	Operating		15 g (1/2 sine, 11 ms)	
	Nonoperating		30 g (1/2 sine, 11 ms)	
Vibration (1) (2)	Operating		0.012 in. p-p, 10...57 Hz, 2 g peak, 57...640 Hz	
	Nonoperating		0.018 in. p-p, 10...57 Hz, 3 g peak (57...640 Hz)	
Altitude	Operating		Sea level to 2000 m (6562 ft)	
	Nonoperating		Sea level to 12,192 m (40,000 ft)	
Enclosure Ratings	With aluminum bezels		UL50 Type 1, 12, and 4 (indoor use only); IEC 60529, IP66	UL50 Type 1, 12, and 4 (indoor use only); IEC 60529, IP66
	With stainless-steel bezels		—	UL50 Type 1, 12, 4, and 4X (indoor use only); IEC 60529, IP66

(1) The optical disk drive is considered a maintenance device. Do not operate the drive in environments with the shock and vibration levels listed. Do not operate the drive in temperatures above 45 °C (113 °F).
(2) Does not apply to book mount non-display computers.

Table 15 - Power Specifications, Customer Loading: 6181P Non-display and Integrated Display Industrial Computers

Attribute		Advanced						Performance				
		NDM (Non-display)	15 in. Widescreen	15 in.	17 in.	19 in. Widescreen	19 in.	NDM	12 in.	15 in.	17 in.	19 in.
Typical	Input power (W)	40	48	47	58	52	66	29	35	36	48	56
	Heat dissipation (BTU/hr)	136	164	160	198	177	225	98	119	123	164	191
Maximum	Input power (W)	140	148	147	158	151	167	113	120	122	136	144
	Heat dissipation (BTU/hr)	478	505	502	539	515	570	386	409	416	464	491

Table 16 - Power Specifications, Input Ratings: All 6181P Models

Attribute		Rating
AC models	Input Voltage	100...240V, autoranging
	Input Power	100...240V; 1.8...0.75 A 50/60 Hz; 180VA
DC models	Input Voltage	18...32V
	Input Power	18...32V; 10.0...5.63 A; 180 W SELV
Ratings, Max	USB 3.0 port	900 mA (1)
	PCIe slot	12 W internal, 28 W external (40 W total)

(1) Per port. Maximum of two ports that are loaded at 900 mA and all other ports at 500 mA.

Table 17 - Certifications: 6181P Integrated Display and Non-display Industrial Computers

Certification		Certification Information
cULus		For the most current certification information, use "6181P-CT" as the search criteria from rok.auto/certifications.
CE		
EAC (TR CU)	Low Voltage TR CU 004/2011 EMC TR CU 020/2011	
FCC, Class A Emissions		
KC		
RCM	Australian Radiocommunications Act, compliance with EN 55032	
RoHS	European RoHS 2011/65/EU	
	Türkiye RoHS (EEE Yönetmeliğine Uygundur. In Conformity with the EEE Regulation)	
	China RoHS	see Figure 6

Figure 6 - RoHS: China

部件名称 Part Name	有毒有害物质或元素 Toxic or Hazardous Substances and Elements					
	铅 Lead (Pb)	汞 Mercury (Hg)	镉 Cadmium (Cd)	六价铬 Hexavalent Chromium (Cr(VI))	多溴联苯 Polybrominated Biphenyls (PBB)	多溴二苯醚 Polybrominated Diphenyl Ethers (PBDE)
壳体 Housing	X	0	0	0	0	0
显示 Display	X	0	0	0	0	0
印刷电路板 Printed Circuit Board	X	0	0	0	0	0
金属螺帽 Metal Fasteners	X	0	0	0	0	0
电缆组装 Cable Assembly	X	0	0	0	0	0
风扇组装 Fan Assembly	X	0	0	0	0	0
电力供应组装 Power Supply Assemblies	X	0	0	0	0	0
电池 Battery	0	0	0	0	0	0

本表格依据SJ/T11364 的规定编制。
This table is made per guidance of SJ/T 11364.

0: 表示该有害物质在该部件所有均质材料中的含量均在GB/T26572 规定的限量要求以下。
0: Indicates that this toxic or hazardous substance contained in all of the homogeneous materials for the part is below the limit requirement in GB/T 26572.

X: 表示该有害物质至少在该部件的某一均质材料中的含量超出GB/T26572 规定的限量要求。
求。（企业可在此处，根据实际情况对上表中打"×"的技术原因进行进一步说明。）

X: Indicates that this toxic or hazardous substance contained in at least one of the homogeneous materials for the part is below the limit requirement in GB/T 26572.

Table 18 - Technical Specifications: 6181P Integrated Display and Non-display Industrial Computers — NDM, 1200P, and 1500P Models

Attribute		NDM (Non-display)		1200P	1500P		
				Performance	Performance	Advanced	
Display	Color Active-matrix TFT Flat-panel	–		✓	✓		
	Size, Diagonal	–		12 in. (307 mm)	15 in. (381 mm)	15 in. (381 mm)	15.6 in. (396 mm)
	Aspect Ratio	–		4:3	4:3	4:3	16:9
	Resolution, Max	–		XGA 1024 x 768	XGA 1024 x 768	XGA 1024 x 768, WXGA 1366 x 768	
	Touch Screen	–		Resistive antiglare	Resistive antiglare	PCAP	
	Response Time	–		15 ms	15 ms	15 ms	
	Bezel	–		Aluminum	Aluminum stainless-steel	Aluminum	
Available Processors	Intel Core	i3-4102E	i7-4700EQ	i3-4102E	i3-4102E	i7-4700EQ	
	Quantity	2 cores	4 cores	2 cores	2 cores	4 cores	
	Speed	1.6 GHz	2.4 GHz	1.6 GHz	1.6 GHz	2.4 GHz	
RAM	Type	DDR3-1600 204-pin SO-DIMM		DDR3-1600 204-pin SO-DIMM	DDR3-1600 204-pin SO-DIMM		
	Supplied	4 GB (2 x 2 GB) or 8 GB (2 x 4 GB)		4 GB (2 x 2 GB)	4 GB (2 x 2 GB)	8 GB (2 x 4 GB)	
	Maximum	16 GB (2 x 8 GB) (1)		16 GB (2 x 8 GB) (1)	16 GB (2 x 8 GB) (1)		
Available Storage Drives	SATA MLC SSD	1 x 256 GB, 2.5-in.		1 x 256 GB, 2.5-in.	1 x 256 GB, 2.5-in.		
	SATA MLC SSD (RAID 1)	2 x 256 GB, 2.5-in.		–	–		
	SATA SLC™ SSD	1 x 32 GB, 2.5-in. 1 x 64 GB, 2.5-in. (2)			–		
Expansion Slots		1 PCI Express x8 (3)		1 PCI Express x8 (3)	1 PCI Express x8 (3)		
Available Optical Storage Drive (ODD)		None supplied 1 DVD-RW/CD-RW		None supplied (4)	None supplied (4)	1 DVD-RW/CD-RW	
CompactFlash Type II		Type II Slot with Cover		Type II Slot with Cover	Type II Slot with Cover		
I/O Connections	PS/2™ Keyboard Port	1		–	–		
	PS/2™ Mouse Port	1		–	–		
	Serial RS-232 COM Ports	2		–	–		
	USB 3.0 External Ports	–		4 or 5 (5)	–		
	Ethernet LAN Ports	–		2, 1 GB each	–		
	DVI-I Port	–		1	–		
	Display Port	–		–	1		
	Audio	–		–	3 total: audio line-in, audio line-out, and microphone-in		
Available Operating Systems (OSs) (6)		Windows 10 IoT Enterprise (64 bit)					
		Windows 7 Professional (64 bit) SP1			–	✓	
		Windows Server 2008 R2 Standard (64 bit) SP1		–	–		
		WES 7 (64 bit) SP1			–		
Approximate Weight [kg (lb)]	Aluminum Bezel	7.5 (16.5)		8.5 (18.7)	9.9 (21.8)		
	Stainless-steel Bezel	–		–	11.1 (24.5)	–	
	Widescreen	–		–	–	10.8 (23.8)	
Approximate Dimensions		See Table 7 on page 23					
Approximate Cutout Dimensions		See Table 7 on page 23					
Mount Options	Book mount	✓(7)		–	–		
	Panel	–		✓	✓		
	Tabletop	✓		–	–		
	Wall Mount	✓		–	–		

(1) The maximum memory that is shipped is 8 GB. 16 GB is available through a kit (Cat. No. 6189V-16GSODDR3), which is sold separately.
(2) Available through a kit (Cat. No. 6189V-6181SSD64GB), which is sold separately.
(3) Available one-slot riser kit (Cat. No. 6189V-PCIR) supports 1 PCI, and two-slot kit (Cat. No. 6189V-EXTPCI2) supports 2 PCI, 2 PCIe x4, or 1 PCIe x4 plus 1 PCI, all that are half-length.
(4) Performance models are not sold with an ODD, but one can be installed. You must order a kit (Cat. No. 6189V-ODD), which is sold separately.
(5) All display models have four external USB 3.0 ports and one internal USB 3.0 port. Display models with an aluminum bezel have an extra external USB 3.0 port on the bezel (behind the front access cover).
(6) 32-bit images for the Windows 7 operating system are available from the Rockwell Automation Product Compatibility and Download Center: https://compatibility.rockwellautomation.com/Pages/home.aspx.
(7) A bookshelf mounting kit (catalog number 6189V-BOOKBRKT) is required and must be ordered separately.

Table 19 - Technical Specifications: 6181P Integrated Display Industrial Computers, 1700P and 1900P Models

Attribute		1700P		1900P		
		Performance	Advanced	Performance	Advanced	
Display	Color Active-matrix TFT Flat-panel	✓		✓		
	Size, diagonal	17 in. (432 mm)		19 in. (483 mm)	18.5 in. (470 mm)	19 in. (483 mm)
	Aspect Ratio	5:4		5:4	16:9	5:4
	Resolution, Max	SXGA 1280 x 1024		SXGA 1280 x 1024	SXGA 1280 x 1024, WXGA 1366 x 768	
	Touch Screen	Resistive antiglare	PCAP	Resistive antiglare	PCAP	
	Response Time	15 ms		15 ms		
	Bezel	Aluminum stainless-steel	Aluminum	Aluminum stainless-steel	Aluminum	
Available Processors	Intel Core	i3-4102E	i7-4700EQ	i3-4102E	i7-4700EQ	
	Cores, quantity	2 cores	4 cores	2 cores	4 cores	
	Speed	1.6 GHz	2.4 GHz	1.6 GHz	2.4 GHz	
RAM	Type	DDR3-1600 204-pin SO-DIMM		DDR3-1600 204-pin SO-DIMM		
	Supplied	4 GB (2 x 2 GB)	8 GB (2 x 4 GB)	4 GB (2 x 2 GB)	8 GB (2 x 4 GB)	
	Maximum	16 GB (2 x 8 GB) (1)		16 GB (2 x 8 GB) (1)		
Available Storage Drives	SATA MLC SSD	1 x 256 GB		1 x 256 GB		
	SATA SLC™ SSD	1 x 32 GB		1 x 32 GB		
		1 x 64 GB (2)		1 x 64 GB (2)		
Expansion Slots		1 PCI Express x8 (3)		1 PCI Express x8 (3)		
Available ODD		None supplied (4)	1 DVD-RW/CD-RW	None supplied (4)	1 DVD-RW/CD-RW	
CompactFlash Type II		Type II slot with cover		Type II slot with cover		
I/O Connections	PS/2™ Keyboard Port	1	t	–		
	PS/2 Mouse Port	1	–	–		
	Serial RS-232 COM Ports	2	–	–		
	USB 3.0 External Ports	–	4 or 5 (5)	–		
	Ethernet LAN Ports	–	2, 1 GB each	–		
	DVI-I Port	–	1	–		
	Display Port	–		1		
	Audio	–		3 jacks: audio line-in, audio line-out, and microphone-in		
Available OSs (6)		Windows 10 IoT Enterprise (64 bit)		Windows 10 IoT Enterprise (64 bit)		
		Windows 7 Professional (64 bit) SP1		Windows 7 Professional (64 bit) SP1		
		WES 7 (64 bit) SP1	–	WES 7 (64 bit) SP1	–	
Approximate Weight [kg (lb)]	Aluminum Bezel	11.1 (24.5)		13.2 (29.1)		
	Stainless-steel Bezel	12.8 (28.2)	–	14.5 (32)	–	
	Widescreen	–	–	–	13 (28.7)	
Approximate Dimensions		See Table 7 on page 23		See Table 7 on page 23		
Approximate Cutout Dimensions		See Table 7 on page 23		See Table 7 on page 23		
Mount Options	Panel Mount	✓		✓		

(1) The maximum memory that is shipped with the industrial computer is 8 GB. 16 GB is available through a kit (Cat. No. 6189V-16GSODDR3) which is sold separately.
(2) Available through a kit (Cat. No. 6189V-6181SSD64GB) which is sold separately.
(3) Available one-slot riser kit (Cat. No. 6189V-PCIR) supports 1 PCI and two-slot kit (Cat. No. 6189V-EXTPCI2) supports 2 PCI, 2 PCIe x4, or 1 PCIe x4 plus 1 PCI, all that are half-length.
(4) Performance models are not sold with an ODD, but one can be installed. You must order a kit (Cat. No. 6189V-ODD) which is sold separately.
(5) All display models have four external USB 3.0 ports and one internal USB 3.0 port.
Display models with an aluminum bezel have an extra external USB 3.0 port on the bezel (behind the front access cover).
(6) 32-bit images for the Microsoft Windows 7 OS are available from the Rockwell Automation Product Compatibility and Download Center, rok.auto/pcdc.

Figure 7 - Approximate Dimensions [mm (in.)]: 6181P Integrated Display and Non-display Industrial Computers

Approximate dimensions are in millimeters (inches). Dimensions are not for manufacturing purposes.

Performance and Advanced (5:4 display)

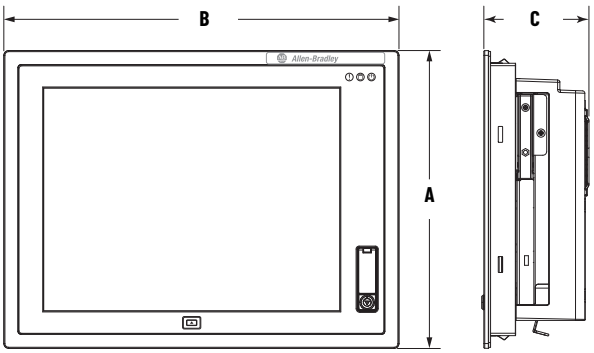

Advanced Widescreen (16:9 display)

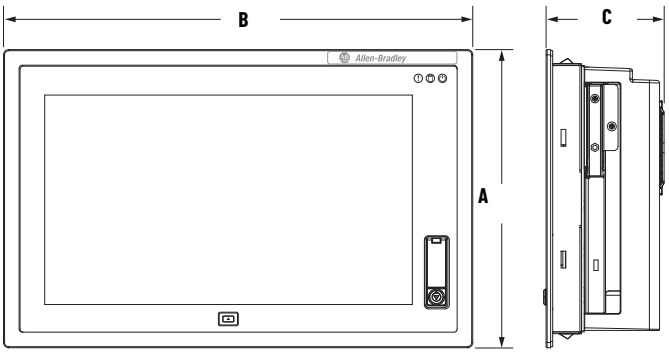

Non-display (NDM)

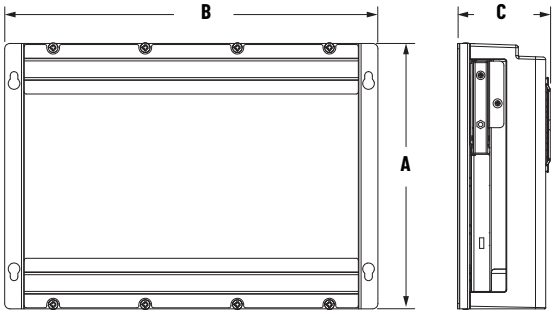

Model Type				A	B	C	Cutout Height	Cutout Width
Non-display (NDM)		Performance		251 (9.88)	353 (13.9)	83.4 (3.28)	–	–
		Advanced				87.7 (3.45)		
Integrated Display	1200P	Performance	Aluminum Bezel	279 (10.98)	349 (13.74)	104.8 (4.13)	254 (10)	324 (12.76)
	1500P	Performance	Aluminum Bezel	309 (12.16)	410 (16.14)	104.8 (4.13)	285.6 (11.24)	386.6 (15.22)
			Stainless-steel Bezel			104.1 (4.1)		
		Advanced	Aluminum Bezel, Standard 4:3 Display	309 (12.16)	410 (16.14)	104.8 (4.13)	285.6 (11.24)	386.6 (15.22)
			Aluminum Bezel, Widescreen 16:9 Display	284 (11.18)	447 (17.6)	108.1 (4.26)	260.2 (10.24)	420 (16.54)
	1700P	Performance	Aluminum Bezel	356 (14.01)	452 (17.80)	104.8 (4.13)	329.5 (12.97)	424 (16.69)
			Stainless-steel Bezel			104.1 (4.10)		
		Advanced	Aluminum Bezel, Standard 5:4 Display			104.8 (4.13)		
	1900P	Performance	Aluminum Bezel	399.3 (15.72)	482.6 (19)	108.1 (3.94)	363.5 (14.31)	449.6 (17.7)
			Stainless-steel Bezel					
		Advanced	Aluminum Bezel, Standard 5:4 Display	399.3 (15.72)	482.6 (19)		363.5 (14.31)	449.6 (17.7)
			Aluminum Bezel, Widescreen 16:9 Display	339.3 (13.36)	515.6 (20.3)		321 (12.64)	493 (19.41)

Notes:

6181X Series H Non-display Industrial Computer

6181X Series H Integrated Display Industrial Computer with Resistive Touch Screen

6181X Series H Integrated Display Industrial Computer with PCAP Touch Screen

Sun Shield for 6181X Series H Integrated Display Industrial Computers

The specifications in this section are for 6181X Series H computers only.
For 6181X Series J specifications, see Industrial Computers and Monitors Technical Data, publication 6300-TD001.

With UL Class 1 Div. 2, ATEX, INMETRO, and IECEx hazardous location certifications, this extreme environment industrial computer can be safely used in areas globally where explosive materials can be present. The integrated display version of this industrial computer mounts in a panel while the non-display version mounts on a wall. All Bulletin No. 6181X Series H integrated display industrial computers withstand temperatures of -20...+70 °C (-4...+158 °F) inside a cabinet or enclosure. The front of the Bulletin No. 6181X Series H integrated display industrial computers withstand ambient temperatures in the range of -20...+55 °C (-4...+131 °F).

A sun shield (cat. no. 6189X-SUNSHIELD) is available for Bulletin No. 6181X Series H integrated display industrial computers to be installed outdoors. To increase the field life of your electronic device, install a sun shield to help protect against direct and long-term exposure to sunlight, ultraviolet radiation, and infrared radiation. Rockwell Automation does not recommend collapsible sun shields for Bulletin No. 6181X Series H integrated display computers in outdoor installations.

Technical Data

Table 20 - Environment Specifications: 6181X Series H Industrial Computers for Hazardous Locations

Attribute		Non-display Models	Integrated Display Models	
			PCAP Touch Screen	Resistive Touch Screen
Temperature	Operating	-20...+70 °C (-4...+158 °F)	-20...+55 °C (-4...+131 °F), display side -20...+70 °C (-4...+158 °F), back side	
	Nonoperating	-30...+80 °C (-22...+176 °F)	-30...+80 °C (-22...+176 °F)	
Relative Humidity		10...90% noncondensing	10...90% noncondensing	
Altitude	Operating	2000 m (6561 ft)	2000 m (6561 ft)	
	Nonoperating	12,000 m (39,370 ft)	12,000 m (39,370 ft)	
Vibration	Operating	0.012 in. p-p 10...57 Hz 2 g peak at 57...640 Hz	0.012 in. p-p 10...57 Hz 2 g peak at 57...640 Hz	
Shock	Operating	15 g (1/2 sine, 11 ms)	15 g (1/2 sine, 11 ms)	
	Nonoperating	30 g (1/2 sine, 11 ms)	30 g (1/2 sine, 11 ms)	
Enclosure Ratings (Display Models)		–	Rated for UL Type1. 4, 4X, 12, 13 and classified by UL in accordance with IEC 60529, IP66 when properly mounted on a flat surface of an equivalent-type enclosure.	

Table 21 - Hazardous Location Ratings by Region: 6181X Series H Industrial Computers for Hazardous Locations

Model Type	Cat. Nos.	Region	Rating	Temperature Range
Non-display	6181X-00N2SW71DC, 6181X-00N2SWX1DC	United States	Class I Division 2, Groups A, B, C, D T4	-20 °C ≤ T_a ≤ 70 °C (-4 °F ≤ T_a ≤ 158 °F)
			Class I Zone 2, IIC, T4	
		Canada	Class I Division 2, Groups A, B, C, D T4	
			Class I Zone 2, IIC, T4	
		Europe (ATEX)	II 3 G, Ex ec IIC T4 Gc, DEMKO 19 ATEX 2274 X	
		Global/IECEx	Ex ec IIC T4 Gc, IECEx UL 19.0091 X	
		INMETRO	Ex ec IIC T4 Gc, UL-BR 19.1305 X	
Integrated Display 12 in.	6181X-12P2SWX1DC	United States	Class I Division 2, Groups A, B, C, D T4 Class II Division 2, Groups F, G T6 Class III Division 1 T6	-20 °C ≤ T_a ≤ 55 °C (-4 °F ≤ T_a ≤ 131 °F) (display side) -20 °C ≤ T_a ≤ 70 °C (-4 °F ≤ T_a ≤ 158 °F) (backside)
			Class I Zone 2, IIC, T4 Class II Zone 22, IIIB, T70 °C	
		Canada	Class I Division 2, Groups A, B, C, D T4 Class II Division 2, Groups F, G T6 Class III Division 1 T6	
			Class I Zone 2, IIC, T4 Class II Zone 22, IIIB, T70 °C	
		Europe (ATEX)	II 3 GD, Ex ec IIC T4 Gc IP66, Ex tc IIIC T70 °C Dc IP66, DEMKO 19 ATEX 2274 X	
		Global/IECEx	Ex ec IIC T4 Gc IP66, Ex tc IIIC T70 °C Dc IP66, IECEx UL 19.0091 X	
		INMETRO	Ex ec IIC T4 Gc IP66, Ex tc IIIC T70 °C Dc IP66, UL-BR 19.1305 X	
Integrated Display 12 in.	6181X-12A2SW71DC, 6181X-12A2SWX1DC	United States	Class I Division 2, Groups A, B, C, D T4	-20 °C ≤ T_a ≤ 55 °C (-4 °F ≤ T_a ≤ 131 °F) (display side) -20 °C ≤ T_a ≤ 70 °C (-4 °F ≤ T_a ≤ 158 °F) (backside)
			Class I Zone 2, IIC, T4	
		Canada	Class I Division 2, Groups A, B, C, D T4	
			Class I Zone 2, IIC, T4	
		Europe (ATEX)	II 3 GD, Ex nA nC IIC T4 Gc IP66, Ex tc IIIC T135 °C Dc IP66, DEMKO 17 ATEX 1851 X	
		Global/IECEx	Ex nA nC IIC T4 Gc IP66, Ex tc IIIC T135 °C Dc IP66, IECEx UL 17.0024 X	

Table 22 - Certifications: 6181X Series H Industrial Computers for Hazardous Locations

Certification		Certification Information
cULus for use in Hazardous Locations		For the most current certification information, use "6181X-CT" as the search criteria from rok.auto/certifications.
CE		
EAC		
FCC, Class A Emissions		
KC		
RCM (formerly C-Tick)	Australian Radiocommunications Act, compliance with EN 55032	
RoHS	European RoHS 2011/65/EU	
	Türkiye RoHS (EEE Yönetmeliğine Uygundur. In Conformity with the EEE Regulation)	
	China RoHS	see Figure 8

Figure 8 - RoHS: China

部件名称 Part Name	有毒有害物质或元素 Toxic or Hazardous Substances and Elements					
	铅 Lead (Pb)	汞 Mercury (Hg)	镉 Cadmium (Cd)	六价铬 Hexavalent Chromium (Cr(VI))	多溴联苯 Polybrominated Biphenyls (PBB)	多溴二苯醚 Polybrominated Diphenyl Ethers (PBDE)
壳体 Housing	X	0	0	0	0	0
显示 Display	X	0	0	0	0	0
印刷电路板 Printed Circuit Board	X	0	0	0	0	0
金属螺帽 Metal Fasteners	X	0	0	0	0	0
电缆组装 Cable Assembly	X	0	0	0	0	0
风扇组装 Fan Assembly	X	0	0	0	0	0
电力供应组装 Power Supply Assemblies	X	0	0	0	0	0
电池 Battery	0	0	0	0	0	0

本表格依据SJ/T11364 的规定编制。
This table is made per guidance of SJ/T 11364.

0: 表示该有害物质在该部件所有均质材料中的含量均在GB/T26572 规定的限量要求以下。
0: Indicates that this toxic or hazardous substance contained in all of the homogeneous materials for the part is below the limit requirement in GB/T 26572.

X: 表示该有害物质至少在该部件的某一均质材料中的含量超出GB/T26572 规定的限量要求。
求。（企业可在此处，根据实际情况对上表中打“×”的技术原因进行进一步说明。）
X: Indicates that this toxic or hazardous substance contained in at least one of the homogeneous materials for the part is below the limit requirement in GB/T 26572.

Table 23 - Power Specifications: 6181X Series H Industrial Computers for Hazardous Locations

Attribute		Non-display Models	Integrated Display Models	
		Cat. No. 6181X-00N2SW71DC, Cat. No. 6181X-00N2SWX1DC	Cat. No.6181X-12A2SW71DC, Cat. No.6181X-12A2SWX1DC	Cat. No. 6181X-12P2SWX1DC
Input Voltage		18...32V DC	18...32V DC	18...32V DC
Power Consumption, Max		18...32V DC (SELV), 2.22...1.25 A, 40 W	18...32V DC (SELV), 2.78...1.56 A, 50 W	18...32V DC (SELV), 3.28...1.79 A, 60 W
Heat Dissipation (1)		40 W (154 BTU/h)	50 W (171 BTU/h)	60 W (205 BTU/h)
Peripheral Loading	PCIe Card, Max	4 W	4 W	4 W
	USB Ports, Max per Port	900 mA, 10 W max for all ports (2 A)	900 mA, 10 W max for all ports (2 A)	900 mA

(1) Add-in cards and peripherals are included in the heat dissipation value.

Table 24 - Technical Specifications: 6181X Series H Industrial Computers for Hazardous Locations

Attribute		Non-display Models	Integrated Display Models	
		Cat. No. 6181X-00N2SW71DC, Cat. No. 6181X-00N2SWX1DC	Cat. No. 6181X-12A2SW71DC, Cat. No. 6181X-12A2SWX1DC	Cat. No. 6181X-12P2SWX1DC
Display	Display Type	No display	Active matrix color TFT	Projected capacitive (PCAP)
	Touch Screen	–	Resistive, sunlight readable film	Chemically strengthened glass with matte finish to help reduce glare. Supports 10-point multi-touch operation.
	Display Size, Diagonal		308 mm (12.1 in.)	
	Display Area (WxH)		246 x 185 mm (9.7 x 7.3 in.)	
	Default Resolution		1024 x 768, 16.2 M colors	
	Luminance		700 cd/m^2 (Nits)	1300 cd/m^2 (Nits)
	Contrast Ratio, Typical		800:1	
	View Angle, Typical		160°	
	LED Backlight Lifetime		100,000 hours max at 25 °C (77 °F)	100,000 hours
	Bezel		Aluminum	
Processor		Intel Core i3-5010U, 2.1 GHz	Intel Core i3-5010U, 2.1 GHz	
RAM		8 GB DDR3 installed (16 GB max)	8 GB DDR3 installed (16 GB max)	
Solid-state Drive (SSD)	Installed	MLC drive on computer side, 128 GB (1)	MLC drive on computer side, 128 GB (1)	
	Max	256 GB	256 GB	
Expansion slots		1 half-length PCIe (2)	1 half-length PCIe (2)	

Table 24 - Technical Specifications: 6181X Series H Industrial Computers for Hazardous Locations (Continued)

Attribute		Non-display Models	Integrated Display Models	
		Cat. No. 6181X-00N2SW71DC, Cat. No. 6181X-00N2SWX1DC	Cat. No. 6181X-12A2SW71DC, Cat. No. 6181X-12A2SWX1DC	Cat. No. 6181X-12P2SWX1DC
CompactFlash (CF) Type II slot		SLC drive on underside of industrial computer (bootable, shipped empty) hot-swappable in non-hazardous locations	SLC drive on underside of industrial computer (bootable, shipped empty) hot-swappable in non-hazardous locations	
I/O Connections	Serial RS-232 COM Ports	2 quantity	2 quantity	
	USB 2.0 Ports	4 quantity	4 quantity, hot-swappable in non-hazardous locations	
	Ethernet LAN Ports	2 quantity, 1 GB each	2 quantity, 1 GB each	
	Video Ports	1 DVI-I and 1 DisplayPort	1 DVI-I and 1 DisplayPort	
Available Operating Systems (OSs)	Windows 10 IoT Enterprise (64 bit)	✓	✓	
	Windows 7 Professional (64 bit), Service Pack 1	✓	✓	
Approximate Weight [kg (lb)]		6.7 kg (14.8 lb)	9 kg (19.8 lb)	9.4 kg (20.7 lb)
Approximate Dimensions		See Figure 9 on page 28	See Figure 9 on page 28	
Cutout Dimensions [mm (in.)]		See Figure 9 on page 28	See Figure 9 on page 28	
Mounting Options	Panel Mount	–	✓	
	Wall Mount	✓	–	

(1) 256 GB hard drive accessory available, Cat. No. 6189X-256GBSSD.
(2) A PCI card is available (Cat. No. 6189X-PCIRISER) that can be used in Cat. No. 6181X-00N2SW71DC, 6181X-00N2SWX1DC, and 6181X-12P2SWX1DC.

Figure 9 - Approximate Dimensions: 6181X Series H Industrial Computers for Hazardous Locations

Approximate dimensions are in millimeters (inches). Dimensions are not for manufacturing purposes.

1200XT Integrated Display Computer

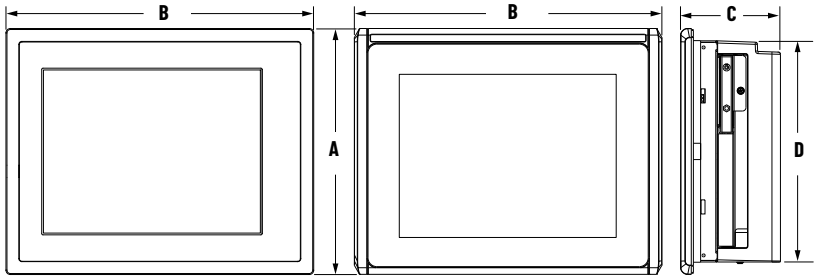

Resistive Touch Screen
Cat. No. 6181X-12A2SW71DC,
6181X-12A2SWX1DC

PCAP Touch Screen
(Cat. No. 6181X-12P2SWX1DC)

1200XT Non-display Industrial Computer

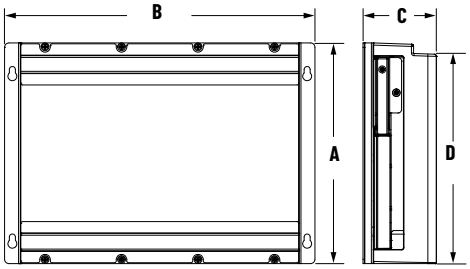

Model Type	A Overall Height	B Overall Width	C Overall Depth	D Backside Height	Cutout Height	Cutout Width
1200XT Display	279 (10.98)	349 (13.74)	101.2 (3.98)	251 (9.88)	254 (10)	324 (12.76)
1200XT Non-display	251 (9.88)	335 (13.20)	83.4 (3.28)	238.2 (9.37)	–	–

Overview

VersaView 5100 Industrial Monitors

6176M Industrial Monitors

6186M Industrial Performance Monitors

Rockwell Automation industrial monitors deliver the latest in LCD flat-panel technology for rugged industrial environments.

VersaView 5100 industrial monitors are designed for applications that require widescreen and multi-touch content. Their stainless-steel construction allows them to be used in NEMA 4X and IEC IP66 environments.

Bulletin 6176M industrial monitors are designed for environments that are less demanding, yet still must maintain endurance to temperature, shock, and vibration.

Bulletin 6186M industrial monitors are better suited for special purpose environments such as UL Class 1 division 2, and food and beverage areas.

To help guide you with your purchase, Table 25 on page 30 compares the various industrial monitor features.

Industrial Monitor Comparison

Table 25 - Comparison: Industrial Monitors

Attribute		VersaView 5100		6176M		6186M	
Display Type		Color TFT		Color TFT		Color TFT	
Display Size		• 12.1 in. widescreen • 15.6 in. widescreen	• 18.5 in. widescreen • 21.5 in. widescreen	• 1550M: 15 in. • 1750M: 17 in.	• 1950M: 19 in.	• 1200M: 12.1 in. • 1500M: 15 in.	• 1700M: 17 in. • 1900M: 19 in.
Available Bezels		• Tempered glass with stainless-steel ring		• Aluminum	• Plastic	• Aluminum	• Stainless-steel
Default Resolution		• 12.1 in.: 1280 x 800 16:9 • 15.6 in. and 18.5 in.: 1366 x 768 16:9 • 21.5 in.: 1920 x 1080 16:9		• 1550M: 1024 x 768 • 1750M/1950M: 1280 x 1024		• 1200M: 800 x 600 • 1500M: 1024 x 768 • 1700M/1900M: 1280 x 1024	
Colors		16.7 M colors		16.7 M colors		1200M: 256K colors; Other models: 16.7 M colors	
Touch Screen		• Projected capacitive, 10-point multi-touch • USB input		• Resistive antiglare; RS-232 and USB inputs, model dependent		• Resistive antiglare; RS-232 and USB inputs, model dependent	
Contrast Ratio		• 12.1 in.: 1000:1 • 15.6 in.: 500:1	• 18.5 in.: 1000:1 • 21.5 in.: 5000:1	• 1550M: 400:1 • 1750M/1950M: 800:1		• 1200M: 600:1 • 1500M: 400:1	• 1700M: 1000:1 • 1900M: 1300:1
Luminance [cd/m^2 (Nits)]		• 12.1 in.: 400 • 15.6 in.: 400	• 18.5 in.: 450 • 21.5 in.: 350	• 1550M: 350 • 1750M/1950M: 300		• 1500M/1700M: 450 • 1700M/1900M: 300	
Video Input Signal		DisplayPort, DVI, VGA (1)		DVI and VGA (analog)		DVI and VGA (analog)	
Operating System (OS) Drivers, Touch Screen		• Windows • Linux®		• Windows 10 IoT Enterprise (2) • Windows Embedded 8.1 Industry Pro (2) • Windows 7 Pro 64 bit (2) • Windows 7 Pro 32 bit (1) • Windows XP Pro (3) • Windows Server® 2012 Standard R2 (2) • Windows Server 2008 (2) • Windows Server 2003 (1)		• Windows 10 IoT Enterprise • Windows Embedded 8.1 Industry Pro (4) • Windows 7 Pro 64 bit (4) • Windows 7 Pro 32 bit (3) • Windows XP Pro (5) • Windows Server 2012 Standard R2 (4) • Windows Server 2008 (4) • Windows Server 2003 (3)	
Power		DC		AC or DC		AC or DC	
Temperature		0...50 °C (32...122 °F)		0...45 °C (32...113 °F)		1200M/1500M: 0...55 °C (32...131 °F) 1700M/1900M: 0...50 °C (32...122 °F)	
Shock	Operating	15 g		15 g		20 g	
	Nonoperating	30 g		20 g		30 g	
Vibration	Operating	1 g		1 g		2 g	
	Nonoperating	2 g		2 g		2 g Rated Class 1 Division 2 for hazardous locations; preferred Industrial Computer: 6181X	
Mount Options	Bench/Tabletop	–		✓		✓	
	Panel Mount	✓		✓		✓	
	Rack (only 1900M)	–		✓		✓	
	VESA	✓		✓		–	

(1) For VGA, a DVI-to-VGA adapter (cat. no. 6189V-DVIVGA) is required and sold separately.
(2) For Series C or later monitors.
(3) For Series B or later monitors.
(4) For Series G or later monitors.
(5) For Series F or later monitors.

VersaView 5100 Industrial Monitors

VersaView 5100 industrial monitors are designed for applications that require widescreen content. They have an edge-to-edge, all glass, 10-point multi-touch screen. The touch screens are pre-calibrated so that recalibration is not necessary. In addition, the stainless-steel construction allows them to be used in NEMA 4X and IEC IP66 environments. The DisplayPort interface makes them ideal for connecting to VersaView 5000 computers and Thin Clients.

Technical Specifications

Table 26 - Environment Specifications: VersaView 5100 Industrial Monitors

Attribute		6200M-12WBN, 6200M-15WBN, 6200M-19WBN, 6200M-22WBN
Temperature	Operating	0...50 °C (32...122 °F)
	Nonoperating	-20...+70 °C (-4...+158 °F)
Relative Humidity		10...90% noncondensing
Vibration	Operating	1 g at 10...500 Hz
	Nonoperating	2 g at 10...500 Hz
Shock	Operating	15 g (1/2 sine, 11 ms)
	Nonoperating	30 g (1/2 sine, 11 ms)
Enclosure ratings		VESA Mount: IEC IP20 Panel Mount: NEMA 4X, IEC IP66

Table 27 - Technical Specifications: VersaView 5100 Industrial Monitors

Attribute		6200M-12WBN	6200M-15WBN	6200M-19WBN	6200M-22WBN
Display Type		Color active-matrix TFT LCD			
Display Size, Diagonal		12.1 in. (307 mm)	15.6 in. (396 mm)	18.5 in. (470 mm)	21.5 in. (546 mm)
Display Area (W x H) [mm (in.)]		261.1 x 163.2 (10.28 x 6.43 in.)	344.2 x 193.5 (13.55 x 7.62)	409.8 x 230.4 (16.13 x 9.07)	476.6 x 268.1 (18.76 x 10.56)
Resolution, Default Mode		1280 x 800	1366 x 768	1366 x 768	1920 x 1080
Luminance [cd/m^2 (Nits)]		400	400	450	350
Contrast Ratio, Typical		1000:1	500:1	1000:1	5000:1
Response Time, Max	Fall	4 ms	4 ms	2.5 ms	10 ms
	Rise	9 ms	9 ms	5 ms	25 ms
Status Indicator Backlight Lifetime		100,000 hours at 25 °C (77 °F)	50,000 hours at 25 °C (77 °F)	50,000 hours at 25 °C (77 °F)	50,000 hours at 25 °C (77 °F)
Backlight Type		Light-emitting diode			
Bezel Type		Tempered glass with stainless-steel ring			
Touch Screen		Projected capacitive (PCAP), 10-point multi-touch, USB input			
Touch Screen Controller		EETI/eGalax			
Operating System (OS) Drivers	Windows	✓			
	Linux	✓			
USB Hub		None			
Video Input Connectors	DisplayPort	✓			
	DVI	✓			
	VGA (1)	✓			
OSD Controls		Via software utility (2)			
Input Voltage, DC		24V DC			
Power Consumption, Max		11.7 W	12.1 W	15.3 W	25.5 W
Approximate Dimensions		See Figure 11 on page 32			
Cutout Dimensions		See Figure 11 on page 32			
Approximate Weight [kg (lb)]		4.08 kg (9 lb)	5.39 kg (11.9 lb)	6.75 kg (14.9 lb)	7.98 kg (17.6 lb)
Mounting Options	Panel Mount	✓			
	VESA 75/100	✓			

(1) Can be used for VGA with DVI-to-VGA adapter, cat. no. 6189V-DVIVGA, which is sold separately.
(2) Available for download from rok.auto/pcdc.

Table 28 - Certifications: VersaView 5100 Industrial Monitors

Certification		Certification Information
cULus		For the most current certification information, use "5100-CT" as the search criteria from rok.auto/certifications.
CE		
EAC		
FCC, Class A Emissions		
KC		
RCM		
RoHS	European RoHS 2011/65/EU	
	Türkiye RoHS (EEE Yönetmeliğine Uygundur. In Conformity with the EEE Regulation)	
	China RoHS	see Figure 10

Figure 10 - RoHS: China RoHS

部件名称 Part Name	有毒有害物质或元素 Toxic or Hazardous Substances and Elements					
	铅 Lead (Pb)	汞 Mercury (Hg)	镉 Cadmium (Cd)	六价铬 Hexavalent Chromium (Cr(VI))	多溴联苯 Polybrominated Biphenyls (PBB)	多溴二苯醚 Polybrominated Diphenyl Ethers (PBDE)
壳体 Housing	X	0	0	0	0	0
显示 Display	X	0	0	0	0	0
印刷电路板 Printed Circuit Board	X	0	0	0	0	0
金属螺帽 Metal Fasteners	X	0	0	0	0	0
电缆组装 Cable Assembly	X	0	0	0	0	0
风扇组装 Fan Assembly	X	0	0	0	0	0
电力供应组装 Power Supply Assemblies	X	0	0	0	0	0
电池 Battery	0	0	0	0	0	0

本表格依据SJ/T11364 的规定编制。
This table is made per guidance of SJ/T 11364.

0: 表示该有害物质在该部件所有均质材料中的含量均在GB/T26572 规定的限量要求以下。
0: Indicates that this toxic or hazardous substance contained in all of the homogeneous materials for the part is below the limit requirement in GB/T 26572.

X: 表示该有害物质至少在该部件的某一均质材料中的含量超出GB/T26572 规定的限量要求。
求。（企业可在此处，根据实际情况对上表中打"×"的技术原因进行进一步说明。）
X: Indicates that this toxic or hazardous substance contained in at least one of the homogeneous materials for the part is below the limit requirement in GB/T 26572.

Figure 11 - Approximate Dimensions [mm (in.)]: VersaView 5100 Industrial Monitor

Approximate dimensions are in millimeters (inches). Dimensions are not for manufacturing purposes.

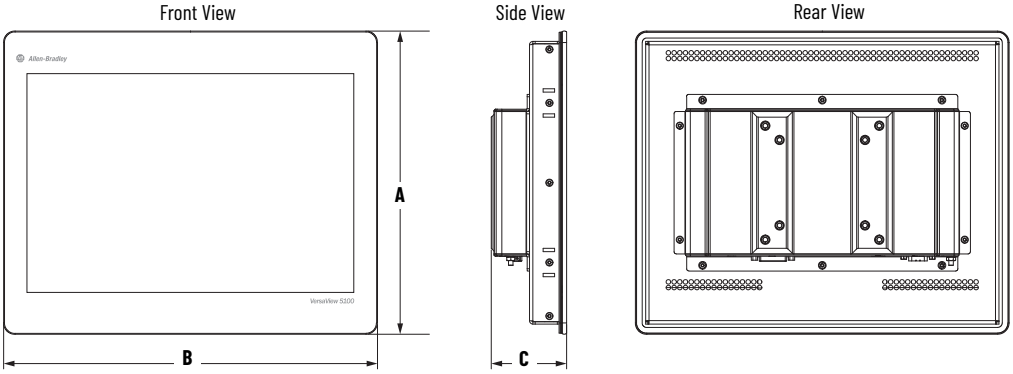

Cat. No. 6200M-	A Overall Height	B Overall Width	C Overall Depth	Cutout Height	Cutout Width
12WBN	266 (10.47)	328 (12.91)	66.1 (2.6)	250 (9.84)	312 (12.28)
15WBN	298 (11.73)	414 (16.3)		282 (11.1)	398 (15.67)
19WBN	337 (13.27)	480 (18.9)		321 (12.64)	464 (18.27)
22WBN	373 (14.68)	545 (21.46)		357 (14.06)	529 (20.83)

6176M Standard Industrial Monitors

6176M standard industrial monitors are designed for less demanding environments, but still provide industrial ratings for temperature, shock, and vibration.

Technical Specifications

Table 29 - Environment Specifications: 6176M Industrial Monitors

Attribute		1550M, 1750M, 1950M
Temperature	Operating	0...45 °C (32...113 °F)
	Nonoperating	-20...+60 °C (-4...+140 °F)
Relative Humidity		10...90% noncondensing
Vibration	Operating	1 g at 53...640 Hz
	Nonoperating	2 g at 53...640 Hz
Shock	Operating	15 g (1/2 sine, 11 ms)
	Nonoperating	20 g (1/2 sine, 11 ms)
Enclosure Ratings (1)		NEMA Type 4, 12, IEC IP66

(1) Applies only to panel-mounted monitors.

Table 30 - Certifications: 6176M Industrial Monitors

Certification		Certification Information
cULus		For the most current certification information, use "6176M-CT" as the search criteria from rok.auto/certifications.
CE		
EAC		
FCC, Class A Emissions		
KC		
RCM		
RoHS	European RoHS 2011/65/EU	
	Türkiye RoHS (EEE Yönetmeliğine Uygundur. In Conformity with the EEE Regulation)	
	China RoHS	see Figure 12

Figure 12 - RoHS: China RoHS

部件名称 Part Name	有毒有害物质或元素 Toxic or Hazardous Substances and Elements					
	铅 Lead (Pb)	汞 Mercury (Hg)	镉 Cadmium (Cd)	六价铬 Hexavalent Chromium (Cr(VI))	多溴联苯 Polybrominated Biphenyls (PBB)	多溴二苯醚 Polybrominated Diphenyl Ethers (PBDE)
壳体 Housing	X	0	0	0	0	0
显示 Display	X	0	0	0	0	0
印刷电路板 Printed Circuit Board	X	0	0	0	0	0
金属螺帽 Metal Fasteners	X	0	0	0	0	0
电缆组装 Cable Assembly	X	0	0	0	0	0
风扇组装 Fan Assembly	X	0	0	0	0	0
电力供应组装 Power Supply Assemblies	X	0	0	0	0	0
电池 Battery	0	0	0	0	0	0

本表格依据SJ/T11364 的规定编制。
This table is made per guidance of SJ/T 11364.

0: 表示该有害物质在该部件所有均质材料中的含量均在GB/T26572 规定的限量要求以下。
0: Indicates that this toxic or hazardous substance contained in all of the homogeneous materials for the part is below the limit requirement in GB/T 26572.

X: 表示该有害物质至少在该部件的某一均质材料中的含量超出GB/T26572 规定的限量要求。
求。（企业可在此处，根据实际情况对上表中打"×"的技术原因进行进一步说明。）
X: Indicates that this toxic or hazardous substance contained in at least one of the homogeneous materials for the part is below the limit requirement in GB/T 26572.

Table 31 - Technical Specifications: 6176M Industrial Monitors

Attribute		1550M	1750M	1950M
Display Type		Color active-matrix TFT LCD		
Display Size, Diagonal		15 in. (381 mm)	17 in. (432 mm)	19 in. (483 mm)
Display Area (WxH) [mm (in.)]		305 x 229 (12.0 x 9.0)	338 x 270 (13.3 x 10.7)	377 x 302 (14.8 x 11.9)
Resolution		1024 x 768	1280 x 1024	1280 x 1024
Colors		16.7 M colors		
Luminance [cd/m^2 (Nits)]		350		
Contrast Ratio, Typical		400:1	800:1	800:1
Response Time, Max	Fall	4 ms	3 ms	3 ms
	Rise	12 ms	6 ms	6 ms
Status Indicator Backlight Lifetime		50,000 hours at 25 °C (77 °F)		
Available Bezels	Plastic (reinforced steel)	✓		
	Aluminum Alloy	✓		
Touch Screen Option		Resistive antiglare (RS-232 and USB inputs), model dependent		
Touch Screen Controller	Series A and B	PANJIT		
	Series C	eGalax_eMPIA Technology Inc (EETI)		
OS Touch Screen	Series A and B	• Windows 7 Pro (32 bit)	• Windows XP Pro	• Windows Server 2003 (32 bit)
	Series C	• Windows 10 IoT Enterprise • Windows Embedded 8.1 Industry Pro • Windows 7 Pro (32 bit and 64 bit)	• Windows XP Pro • Windows Server 2012 Standard R2	• Windows Server 2008 (64 bit) • Windows Server 2003 (32 bit)
USB Hub		(2) USB 2.0, 500 mA per port		
Video Input Signal		VGA and DVI (system auto-select)		
Video Input Connectors		HD-15 VGA for analog video signal, DVI for digital video signal		
OSD Controls		Rear controls: automatic screen setup (OSD), brightness, contrast, horizontal position, vertical position, image lock, color balance, sync detect		
Input Voltage, AC		90...264V AC autoranging, 47...63 Hz		
Power Consumption		2.0 A at 24 W	3 A at 36 W	3.5 A at 42 W
Input Voltage, DC		12V DC, power adapter required		
Approximate Weight	VESA Mount	3.1 kg (6.82 lb)	4.6 kg (10.12 lb)	6.0 kg (13.20 lb)
	Panel Mount	4.1 kg (9.02 lb)	5.7 kg (12.54 lb)	7.5 kg (16.50 lb)
Approximate Dimensions		See Figure 13 on page 35		
Cutout Dimensions		See Figure 13 on page 35		
Mounting Options	Bench/Tabletop	✓	✓	✓
	Panel Mount	✓	✓	✓
	Rack	–	–	✓ (1)
	VESA	✓	✓	✓

(1) Installs in a standard 19-in. rack.

Figure 13 - 6176M Standard Industrial Monitor Dimensions

Approximate dimensions are in millimeters (inches). Dimensions are not for manufacturing purposes.

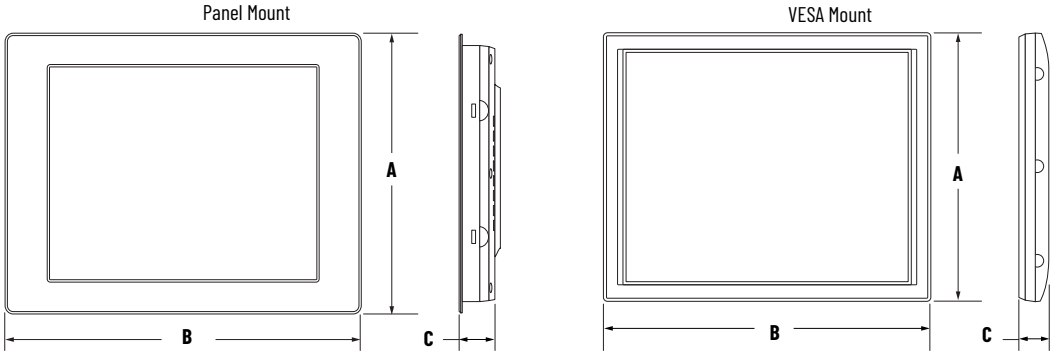

Model	Mount Type	A Overall Height	B Overall Width	C Overall Depth	Cutout Height	Cutout Width
1550M	Panel Mount	309 (12.3)	410 (16.1)	50 (2)	285.6 (11.24)	386.6 (15.22)
	VESA Mount	282.6 (11)	383.6 (15)		–	–
1750M	Panel Mount	356 (14)	452 (17.8)	53 (2.1)	329.5 (12.97)	424 (16.69)
	VESA Mount	326.5 (12.9)	421 (16.6)		–	–
1950M	Panel Mount	399.3 (15.7)	482.6 (19)	58 (2.3)	363.5 (14.31)	449.6 (17.7)
	VESA Mount	357 (14.1)	444 (17.5)		–	–

6186M Industrial Performance Monitors

Bulletin No. 6186M industrial performance monitors are rated Class 1 Division 2 for hazardous locations to withstand extreme conditions. These industrial performance monitors are best suited for special purpose environments like the food and beverage industries since they provide excellent protection against heat, shock, and vibration.

Combine these industrial performance monitors with Rockwell Automation non-display industrial computers for a powerful visualization and information computing solution.

Technical Specifications

Table 32 - Environment Specifications: 6186M Industrial Performance Monitors

Attribute		1200M, 1500M, 1700M, 1900M
Temperature	Operating	1200M and 1500M: 0...55 °C (32...131 °F); 1700M and 1900M: 0...50 °C (32...122 °F)
	Nonoperating	-20...+60 °C (-4...+140 °F)
Relative Humidity		10...90% noncondensing
Vibration	Operating	2 g at 10...640 Hz
	Nonoperating	2 g at 10...640 Hz
Shock	Operating	20 g (1/2 sine, 11 ms)
	Nonoperating	30 g (1/2 sine, 11 ms)
Enclosure Ratings (1)		NEMA / UL 50 Type 1, 4, 4X, 12, and IEC IP66

(1) Applies only to panel-mounted monitors.

Table 33 - Certifications: 6186M Industrial Performance Monitors

Certification		Certification Information
cULus for use in Hazardous Locations		For the most current certification information, use "6186M-CT" as the search criteria from rok.auto/certifications.
CE		
EAC		
FCC, Class A Emissions		
KC		
RCM	Australian Radiocommunications Act, compliance with: AS/NZS 3548 (CISPR 22, EN55022)	
RoHS	European RoHS 2011/65/EU	
	Türkiye RoHS (EEE Yönetmeliğine Uygundur. In Conformity with the EEE Regulation)	
	China RoHS	see Figure 12

Figure 14 - RoHS: China

部件名称 Part Name	有毒有害物质或元素 Toxic or Hazardous Substances and Elements					
	铅 Lead (Pb)	汞 Mercury (Hg)	镉 Cadmium (Cd)	六价铬 Hexavalent Chromium (Cr(VI))	多溴联苯 Polybrominated Biphenyls (PBB)	多溴二苯醚 Polybrominated Diphenyl Ethers (PBDE)
壳体 Housing	X	0	0	0	0	0
显示 Display	X	0	0	0	0	0
印刷电路板 Printed Circuit Board	X	0	0	0	0	0
金属螺帽 Metal Fasteners	X	0	0	0	0	0
电缆组装 Cable Assembly	X	0	0	0	0	0
风扇组装 Fan Assembly	X	0	0	0	0	0
电力供应组装 Power Supply Assemblies	X	0	0	0	0	0
电池 Battery	0	0	0	0	0	0

本表格依据SJ/T 11364 的规定编制。
This table is made per guidance of SJ/T 11364.

0: 表示该有害物质在该部件所有均质材料中的含量均在GB/T 26572 规定的限量要求以下。
0: Indicates that this toxic or hazardous substance contained in all of the homogeneous materials for the part is below the limit requirement in GB/T 26572.

X: 表示该有害物质至少在该部件的某一均质材料中的含量超出GB/T 26572 规定的限量要求。
求。（企业可在此处，根据实际情况对上表中打"×"的技术原因进行进一步说明。）
X: Indicates that this toxic or hazardous substance contained in at least one of the homogeneous materials for the part is below the limit requirement in GB/T 26572.

Table 34 - Technical Specifications: 6186M Industrial Performance Monitors

Attribute		1200M	1500M	1700M	1900M
Display Type		Color active-matrix TFT LCD			
Display Size, Diagonal		12.1 in. (307 mm)	15 in. (381 mm)	17 in. (432 mm)	19 in. (483 mm)
Display Area (WxH)		246 x 185 (9.7 x 7.3)	305 x 229 (12 x 9)	338 x 270 (13.3 x 10.6)	377x 302 (14.8 x 11.9)
Resolution, Default Mode		800 x 600	1024 x 768	1280 x 1024	1280 x 1024
Colors		262K	16.2 M	16.7 M	16.7 M
Luminance [cd/m^2 (Nits)]		450 cd/m^2 Nits		300 cd/m^2 Nits	
Contrast Ratio		600:1, typical	400:1, typical	1000:1, typical	1300:1, typical
Response Time, Max		35 ms	16 ms	8 ms	
Status Indicator Backlight Lifetime		50,000 hours at 25 °C (77 °F)			
Bezel	Aluminum	✓	✓	✓	✓
	Stainless-steel	–	✓	✓	✓
Touch Screen Option		Resistive antiglare (RS-232 and USB inputs), model dependent			
Operating System (OS) Drivers, Touch Screen		• Windows Embedded 8.1 Industry Pro (1) • Windows Server 2012 Standard R2 (1)	• Windows 7 Pro 64 bit (2) • Windows 7 Pro 32 bit (2)	• Windows 10 IoT Enterprise • Windows XP Pro (1)	• Windows Server 2008((1) • Windows Server 2003 (2)
USB Hub		(2) rear USB 2.0 ports, 500 mA per port; (1) front USB 2.0 port, 500 mA (only on aluminum bezel models)			
Video Input Signal		DVI and VGA			
Video Input Connectors		HD-15 VGA for analog video signal DVI for digital video signal			
OSD Controls (on rear)		• Automatic screen setup (OSD) • Brightness	• Contrast • Horizontal position	• Vertical position • Image lock	• Color balance • Sync detect
Input Voltage, AC		100...240V AC autoranging, 47...63 Hz, requires power adapter			
Power Consumption, Max		34 W	34 W	55 W	57 W
Input Voltage, DC		9...36V DC (24V DC nominal)			
Approximate Weight	Aluminum	4.4 kg (9.75 lb)	0.3 kg (16.0 lb)	8.6 kg (19.0 lb)	10.2 kg (22.5 lb)
	Stainless-steel	–	8.6 kg (19.0 lb)	10.1 kg (22.25 lb	11.9 kg (26.25 lb)
Approximate Dimensions		See Figure 15 on page 37.			
Cutout Dimensions		See Figure 15 on page 37.			
Mounting Options	Bench/Tabletop	✓			
	DIN Rail	✓ for AC Power Adapters			
	Panel Mount	✓			

(1) For Series F or later monitors.
(2) For Series G or later monitors.

Figure 15 - Approximate Dimensions [mm (in.)]: 6186M Industrial Performance Monitors

Approximate dimensions are in millimeters (inches). Dimensions are not for manufacturing purposes.

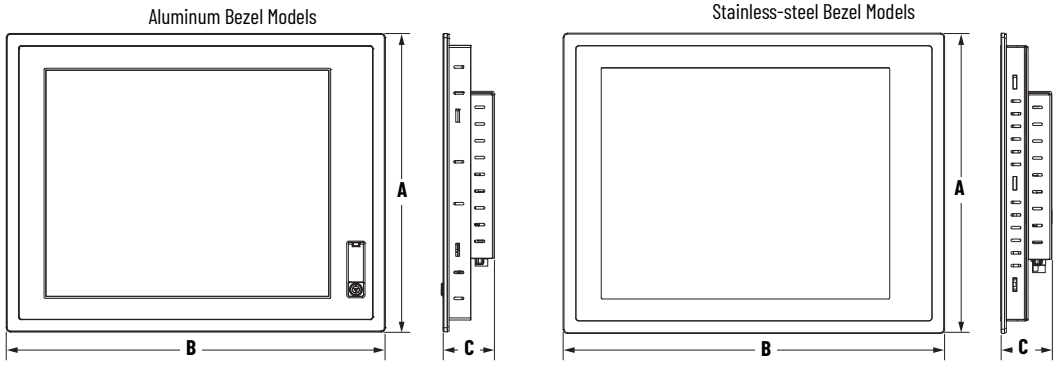

Model	A	B	C	Cutout Height	Cutout Width
1200M	260 (10.24)	340 (13.39)	61 (2.40)	238 (9.37)	318 (12.51)
1500M	309 (12.17)	410 (16.14)		285.6 (11.24)	386.6 (15.22)
1700M	356 (14.02)	452 (17.80)		329.5 (12.97)	424 (16.69)
1900M	399 (15.71)	483 (19.02)	64 (2.52)	363.5 (14.31)	449.6 (17.7)

Notes:

Overview

Allen-Bradley® industrial computers support the full suite of Rockwell Software® solutions, including Integrated Architecture® and FactoryTalk® View software. Combine this hardware and software to help achieve comprehensive application support from an industry leader.

FactoryTalk View performance and visibility human machine interface (HMI) software are designed with a common look, feel, and navigation to help speed HMI development and training time. The visualization strategy combines Rockwell Automation expertise in industrialized personal computer hardware with Rockwell Software supervisory control software.

For a complete list of available HMI software, visit Rockwell Software Overview.

FactoryTalk View Machine Edition Software

FactoryTalk View Machine Edition (ME) software supports both open and embedded operator interface solutions for monitoring and controlling individual machines or small processes. This software features a consistent operator interface across multiple platforms, including Microsoft Windows® OS 10, 8.1, 8, 7, Server, and Embedded Compact solutions. FactoryTalk View ME software consists of a design and runtime environment.

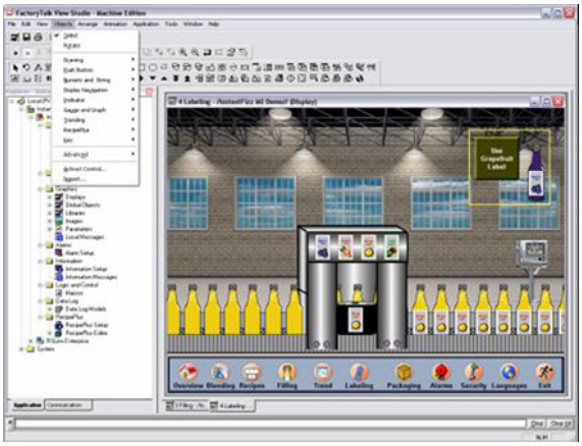

FactoryTalk View Studio Software

FactoryTalk View Studio software is the design environment to create and test HMI applications, including graphic displays, trends, alarms, and real-time animation. Runtime files can be generated to run on a PanelView™ Plus terminal or industrial computer.

FactoryTalk View ME Station

FactoryTalk View ME Station is the runtime environment for HMI applications. FactoryTalk View ME Station is automatically installed and activated on PanelView™ Plus terminals. FactoryTalk View ME activation is required when running HMI applications on industrial computers.

FactoryTalk View ME offers many advantages:

- Alarms to alert operators to conditions that require immediate action
- Security to restrict operator access to specific displays
- RecipePlus for machine or process recipe management
- Display text supports up to 20 languages per application, so operators can switch languages at runtime
- Global and predefined objects are time and memory savers
- Studio 5000® and Logix Designer application process faceplates
- Ability to convert runtime application to design application
- Transfer parameters for reuse in displays and design efficiency

FactoryTalk View Site Edition Software

FactoryTalk View Site Edition (SE) software is used to develop and run supervisory-level monitoring and to control HMI applications. Its architecture is scalable to a wide range of applications, from standalone, one-server/one-client applications to multi-server/multi-client applications. Runtime servers and clients are supported for customers to develop and deploy a multi-server/multi-client application.

FactoryTalk View SE applications are created and tested within the FactoryTalk View Studio design environment:

- Share data and seamless integration with other FactoryTalk enabled products. The FactoryTalk Services Platform provides common services, such as security, alarms, and diagnostics across products.
- Optimize plant communication with FactoryTalk Live Data and premier connectivity to Allen-Bradley controllers.
- Access tag information directly in the controller to minimize HMI tags.
- Configure an application from anywhere on the network to change a running system with a remote, multi-user configuration capability.
- Define graphic displays once and reference them throughout a distributed system.
- Provide an audit trail of operator and alarm information in a centralized log database.
- Customize the operator experience by using client-side VBA and the exposed graphics object model.

FactoryTalk View Studio Enterprise Software

FactoryTalk View Studio Enterprise software is a design environment where you can create applications in both FactoryTalk View ME and FactoryTalk View SE software. The ability to edit and reuse projects in FactoryTalk View Studio improves portability between embedded machine and supervisory HMI systems.

With FactoryTalk View software, all products in the suite are built on the same integrated, scalable architecture. Application developers can import entire machine-level applications into supervisory-level applications or drag individual components and drop them right into supervisory projects, which save development time and reduces the cost of engineering and training.

Plus, help protect your current HMI investments by importing PanelBuilder®32 (PanelView™) applications into FactoryTalk View ME software and RSView®32 applications into FactoryTalk View SE software.

With FactoryTalk View Studio software, you can do the following:

- Configure one operator station or an entire distributed application from one location.
- Access tags from Open Platform Communication (OPC) servers throughout the system performed via a tag browser that presents direct controller tags and HMI tags in a logical hierarchy.
- Remotely configure RSLinx® and FactoryTalk View SE servers.
- Create displays by using a full-featured graphics editor.
- Define display text in multiple languages, so operators can switch languages at runtime.
- Use pre-engineered faceplates to interface with the process control functions in the Logix controllers.

FactoryTalk ViewPoint Software

An add-on to FactoryTalk View SE software and PanelView™ Plus 6 or 7 terminals, FactoryTalk ViewPoint software provides on-demand access to important information about your plant or process from a web browser. Plant managers, supervisors, OEMs, system integrators, and other key stakeholders can now access, monitor, and interact with plant floor operations from virtually any location. The thin client configuration means no client software to install and maintain, which lowers the total cost of ownership (TCO): Fully scalable, animated web applications viewable in the office, at home, or on the road.

- Grants managers, OEMs, and system integrators read and write capability to both view and control real-time plant floor operations by logging in to an Internet browser.
- Provides read and write capabilities to monitor operations.
- Gain fast access to real-time information with a standard web browser.
- Supports multiple browsers and client devices for increased flexibility.
- Lets FactoryTalk View projects be web-enabled without any necessary application changes.
- Monitor and control HMI applications, perform diagnostics, and provide remote support.

Software Comparison

Table 35 - Software Technology

Customer Requirements	FactoryTalk View Site Edition (SE) (2)	FactoryTalk View Machine Edition (ME) (2)	RSView®32
Operating Systems (32 bit) (1)	Windows® 10	Windows 7 SP1	Windows 7 Professional Windows Server 2008 Standard SP2 Windows Server 2000 SP4 Windows 2000 Professional SP4
Operating Systems (64 bit) (1)	Windows Server 2016 Windows Server 2012 R2 Windows Server 2008 R2 Windows 10 Windows 7 SP1	Windows Server 2016 Windows Server 2012 R2 Windows Server 2008 R2 Windows 10 Windows 7 SP1	–
Embedded Platforms	–	✓	–
Windows Domain Security	✓	✓	✓
OPC/ActiveX	✓	✓	✓
FactoryTalk Enabled	✓	✓	–
Server-side VBA	–	–	✓
Client-side VBA	✓	–	–

(1) Windows Vista, Windows XP Professional, and Windows Server 2003 are no longer supported with FactoryTalk View versions 8.20 or later.
(2) For the latest OS information, visit the Rockwell Automation Product Compatibility and Download Center.

Table 36 - Software Architecture

Customer Requirements	FactoryTalk View SE		FactoryTalk View ME	RSView®32
Primary Application	Supervisory level: single station up to multiple servers, multiple clients		Machine level: single station	Supervisory level; single station up to single server, multiple clients
Tag-based HMI	✓		✓	✓
Direct Reference Capability	✓		✓	–
	Network (Distributed)	**Local**	–	–
Number of Servers/clients, Max	10/120 (1)			1/20
FactoryTalk ViewPoint	✓	✓	✓ (2)	–
RSView®32 WebServer	–	–	–	✓
Thin Clients (Terminal Services)	✓	–	–	✓
Multi-user Development	✓	–	–	–
Remote Configuration at Runtime	✓	–	–	–
Redundancy - Data Server	✓	–	–	–
Redundancy - HMI Server	✓	–	–	Active display

(1) Applies to FactoryTalk View SE software version 11; version 10 supports up to 80 clients.
(2) Supported only on PanelView Plus 6 and PanelView Plus 7 terminals.

Table 37 - Software Features

Customer Requirements	FactoryTalk View SE	FactoryTalk View ME	RSView32
Animation: visibility, color, fill, horizontal and vertical position, width, height, rotation, horizontal and vertical slider, and more	And touch	No touch animation	And touch
Alarms	• FactoryTalk Alarms and Events • HMI alarms (1) • Digital and analog • Defined alarm severities • Alarm log	• Tag-based (from controller) • Alarm log	• Tag-based • Digital and analog • Definable alarm severities • Alarm log
Data logging	• 20 data log models per project • Each with up to 10,000 tags • Log to ODBC or proprietary database	• 1 data log model per project • With up to 100 tags • 1,000K records max • Export to dbf	• 20 plus data log models per project • Each with up to 10,000 tags • Log to ODBC or proprietary database
Recipe support	Basic recipe functionality with Recipe Pro+	Recipe+	Recipe Pro extension
Trend support	• TrendX 4.0 • TrendPro+	• TrendX 4.0 subset	• TrendX 3.1 and default
Security	• Assigned to tags, graphic displays, macros, commands, OLE objects • Local or Windows security	• Display-based • Local or Windows security	• Assigned to tags, graphic displays, macros, commands, OLE objects • Local or Windows security
Other features	• Test run macros • Derived tags • Event detector	• Test run macros • Derived tags • S/B test run macros-derived tags • Onboard audit trail (2)	• Test run macros • Derived tags • Event detector
Price model	• Display-based • Multiple levels	• Included with PanelView Plus 7 (2) or display-based • Multiple levels for FactoryTalk View ME Station	• Tag-based • Multiple levels

(1) HMI alarms are not supported in FactoryTalk View SE software version 11 does not support. However, HMI alarms are supported in FactoryTalk View SE software version 10.
(2) For applications that require regulatory compliance. Applies only to FactoryTalk View ME versions 10 or higher that are running on PanelView™ Plus 7 terminals.

FactoryTalk View Site Edition (SE) Software

Table 38 - FactoryTalk View Site Edition (SE) Software

Installation Type	Software Installed	Hardware Requirements (Minimum)
Operator Workstation	• FactoryTalk View SE Client or FactoryTalk View SE Station	• Intel Core 2 Duo • 2 GB memory
Engineering Workstation	• FactoryTalk View Studio Enterprise • RSLinx® Classic • FactoryTalk Linx • Studio 5000®	• Intel Core 2 Duo • 4 GB memory
Application Server	• FactoryTalk View SE Server • FactoryTalk View Studio Enterprise • FactoryTalk View Alarms and Tags-based Server • FactoryTalk Linx Data Server with FactoryTalk Alarms and Events enabled	• Smaller system • Intel Core 2 Duo • 2 GB memory • Medium to larger systems: • Intel Xeon® quad core • 4 GB memory

Table 39 - FactoryTalk View Site Edition (SE) Software

Media Cat. No.	Electronic Download Cat. No.	Description (1)	
To choose your preferred language, replace the xx in the catalog number with EN for English, DE for German, FR for French, JP for Japanese, or ZH for Chinese.			
9701-VWST*xx*M	9701-VWST*xx*E	FactoryTalk View Studio for FactoryTalk View Enterprise	Configuration software to develop and test machine level and supervisory level HMI applications
9701-VWSCWA*xx*M	9701-VWSCWA*xx*E	FactoryTalk View SE Client	Software to view and interact with FactoryTalk View SE Servers (2)
9701-VWSCRA*xx*M	9701-VWSCRA*xx*E	FactoryTalk View SE View Client	Provides read-only capabilities
9701-VWSB015A*xx*M	9701-VWSB015A*xx*E	FactoryTalk View SE Station	15 display
9701-VWSB025A*xx*M	9701-VWSB025A*xx*E		25 display
9701-VWSB100A*xx*M	9701-VWSB100A*xx*E		100 display
9701-VWSB250A*xx*M	9701-VWSB250A*xx*E		250 display
9701-VWSB000A*xx*M	9701-VWSB000A*xx*E		Unlimited display
9701-VWSS025L*xx*M	9701-VWSS025L*xx*E	FactoryTalk View SE Server with FactoryTalk Linx	25 display
9701-VWSS100L*xx*M	9701-VWSS100L*xx*E		100 display
9701-VWSS250L*xx*M	9701-VWSS250L*xx*E		250 display
9701-VWSS000L*xx*M	9701-VWSS000L*xx*E		Unlimited display

(1) FactoryTalk View SE Station and FactoryTalk View SE Server versions 11 include FactoryTalk Services version 6.10.00 (CPR9 SR11).
(2) FactoryTalk View SE Server stores HMI project components and serves to clients, for example, graphic displays.

FactoryTalk ViewPoint Software

Table 40 - FactoryTalk ViewPoint Software

Media Cat. No. (1)	Electronic Download Cat. No.	Description (2)
9522-VWP01RENM	9522-VWP01RENE	1-client system
9522-VWP03RENM	9522-VWP03RENE	3-client system
9522-VWP05RENM	9522-VWP05RENE	5-client system
9522-VWP10RENM	9522-VWP10RENE	10-client system
9522-VWP25RENM	9522-VWP25RENE	25-client system
9522-VWP50RENM	9522-VWP50RENE	50-client system

(1) Order any of these catalog numbers to use FactoryTalk ViewPoint software with FactoryTalk View SE network or local applications.
(2) FactoryTalk ViewPoint server and one client access license are included with the purchase of a PanelView Plus 6 or PanelView Plus 7 terminal. No other catalog numbers are required to use FactoryTalk ViewPoint software with PanelView Plus 6 or PanelView Plus 7 terminals.

FactoryTalk View Machine Edition (ME) Software

Table 41 - FactoryTalk View Machine Edition (ME) Software

Media Cat. No.	Electronic Download Cat. No.	Description
To choose your preferred language, replace the xx in the catalog number with EN for English, DE for German, FR for French, JP for Japanese, or ZH for Chinese.		
9701-VWSTM*xx*M	9701-VWSTM*xx*E	Configuration software to develop and test machine-level HMI applications. Includes FactoryTalk Linx and KEPServer Enterprise software.

Table 42 - FactoryTalk View Machine Edition (ME) Station Runtime

Media Cat. No.	Electronic Download Cat. No.	Description (1) (2)
To choose your preferred language, replace the xx in the catalog number with EN for English, DE for German, FR for French, JP for Japanese, or ZH for Chinese.		
9701-VWMR015A*xx*M	9701-VWMR015A*xx*E	15 displays
9701-VWMR030A*xx*M	9701-VWMR030A*xx*E	30 displays
9701-VWMR075A*xx*M	9701-VWMR075A*xx*E	75 displays
9701-VWMR250A*xx*M	9701-VWMR250A*xx*E	250 displays
9701-VWMR500A*xx*M	9701-VWMR500A*xx*E	500 displays

(1) FactoryTalk View ME Station is the runtime environment where FactoryTalk View ME projects that are created with FactoryTalk View Studio software are run on any computer with a Windows OS. See Table 35 on page 42 for the available Windows OSs.
(2) FactoryTalk View ME Station runtime is included with all PanelView Plus 6 or PanelView Plus 7 terminals.

Third-party Connectivity

Table 43 - Third-party Connectivity

Media Cat. No.	Electronic Download Cat. No.	Description
9301-OPCSRVENM	9301-OPCSRVENE	KEPServer Enterprise for RSView32, FactoryTalk View Site Edition, and FactoryTalk View Machine Edition

Notes:

Overview

Rockwell Automation keyboard, pointing devices, and mice are built for rugged industrial environments with polycarbonate or stainless steel housings. These accessories feature either PS/2™ or USB connection to accommodate connection to your industrial computer.

Technical Specifications

Table 44 - Technical Specifications: Accessories

Cat. No. 6189V-	Description	Material		Connection Port		Operating Temperature Range	Power Required at 5V	Cable Length	Weight
		Polycarbonate	Stainless Steel	PS/2	USB				
HPMOUSE	Pointing device	–	✓	✓	–	-20...+60 °C (-4...+140 °F)	35 mA	3 m (10 ft)	0.57 lbs (1.25 kg)
HPMOUSEP	Panel-mount pointing device	–	✓	✓	–				
HPMOUSEPU				–	✓				
HPMOUSEU	Desktop mouse	–	✓	–	✓				
KBDEPC1U	Desktop keyboard with pointing device	✓	–	–	✓	-20...+60 °C (-4...+140 °F)	200 mA	3 m (10 ft)	1.02 lbs (2.25 kg)
KBDEPP1UC							235 mA		0.9 lbs (2 kg)
KBDEPS1	Desktop keyboard with pointing device	–	✓	✓	–	-20...+60 °C (-4...+140 °F)	35 mA	3 m (10 ft)	2.38 lbs (5.25 kg)
KBDEPS1U				–	✓				
KBPEPS1	Panel-mount keyboard with pointing device	–	✓	✓	–				
KBPEPS1U				–	✓				
MOUSEU	Fully sealed, waterproof optical mouse	✓			✓	0...50 °C (32...122 °F)	100 mA	1.6 m (5.25 ft)	0.1 lbs (0.2 kg)

Table 45 - Certifications: 6189V Accessories

Certification	Certification Information
CE	For the most current certification information, use "6189V-CT" as the search criteria from rok.auto/certifications.
FCC, Part 15 Subpart B Emissions	
KC	
RoHS European RoHS 2011/65/EU	

Notes:

Additional Resources

These documents contain additional information concerning related products from Rockwell Automation. You can view or download publications at rok.auto/literature.

Resource	Description
Visualization Solutions Selection Guide, publication VIEW-SG002	Provides an overview of the visualization products for Bulletin 6181X Series H and Bulletin 6181P, which includes catalog number selections offered by Rockwell Automation.
6176M Standard Industrial Monitors User Manual, publication 6176M-UM001	Provides information to install and mount the monitors, configure video setup, and troubleshoot the 6176M industrial monitors.
6177R and 6189V Non-display Industrial Computers User Manual, publication 6177R-UM002	Provides information to install, make connections, operate, and troubleshoot the 750R and 1450R non-display industrial computers.
6181P and 6189V Integrated Display Industrial Computers User Manual, publication 6181P-UM003	Provides information to install, make connections, operate, and troubleshoot the 6181P and 6189V integrated display industrial computers with hard disk drives.
6181X Series H Industrial Computers for Hazardous Locations User Manual, publication 6181X-UM002	Provides information and guidelines to install, make connections, operate, and troubleshoot the 6181X Series H integrated display and non-display industrial computers for hazardous locations.
Industrial Computers for Hazardous Locations Technical Specification, publication 6300-TD001	Provides technical specifications for 6181X Series J integrated display and non-display industrial computers, for hazardous locations.
6181X Industrial Computers for Hazardous Locations Series J User Manual, publication 6181X-UM003	Provides information and guidelines to install, make connections, operate, and troubleshoot the 6181X Series J integrated display and non-display industrial computers, for hazardous locations.
6186M Industrial Performance Monitors User Manual, publication 6186M-UM002	Provides information to install and mount the monitors, configure video setup, and troubleshoot a 6186M industrial performance monitor.
Integrated Display and Non-display Industrial Computers User Manual, publication 6181P-UM004	Provides information to install, make connections, operate, and troubleshoot the 6181P and 6189V integrated display and non-display industrial computers with solid-state drives.
Industrial Computers for Hazardous Locations User Manual, publication 6181X-UM001	Provides information and guidelines to install, make connections, operate, and troubleshoot the 6181X integrated display and non-display industrial computers in hazardous locations and extreme temperature environments.
Industrial Computers for Hazardous Locations User Manual, Series H, publication 6181X-UM002	Provides information and guidelines to install, make connections, operate, and troubleshoot the 6181X integrated display and non-display industrial computers, series H for hazardous locations.
VersaView 5000 Thin Clients and Industrial Computers User Manual, publication 6200-UM001	Provides information to install, make connections, operate, and troubleshoot VersaView Thin Clients, and integrated display and non-display industrial computers.
VersaView 5100 Industrial Monitors User Manual, publication 6200M-UM001	Provides information to install, mount, and troubleshoot VersaView 5100 industrial monitors.
Product Certifications website, rok.auto/certifications	Provides declarations of conformity, certificates, and other certification details.

Rockwell Automation Support

Use these resources to access support information.

Technical Support Center	Find help with how-to videos, FAQs, chat, user forums, Knowledgebase, and product notification updates.	rok.auto/support
Local Technical Support Phone Numbers	Locate the telephone number for your country.	rok.auto/phonesupport
Technical Documentation Center	Quickly access and download technical specifications, installation instructions, and user manuals.	rok.auto/techdocs
Literature Library	Find installation instructions, manuals, brochures, and technical data publications.	rok.auto/literature
Product Compatibility and Download Center (PCDC)	Download firmware, associated files (such as AOP, EDS, and DTM), and access product release notes.	rok.auto/pcdc

Documentation Feedback

Your comments help us serve your documentation needs better. If you have any suggestions on how to improve our content, complete the form at rok.auto/docfeedback.

Allen-Bradley, expanding human possibility, FactoryTalk, FactoryTalk Analytics, Integrated Architecture, LogixDesigner, PanelBuilder, PanelView, Rockwell Automation, Rockwell Software, RSLinx, RSView, Studio 5000, and VersaView are trademarks of Rockwell Automation, Inc.

EtherNet/IP is a trademark of ODVA, Inc.

Intel, Intel Core, i3, i5, i7, and xeon are trademarks of Intel Corporation.

Microsoft, Windows, and Windows Server are trademarks of Microsoft Corporation.

Trademarks not belonging to Rockwell Automation are property of their respective companies.

Rockwell Automation maintains current product environmental compliance information on its website at rok.auto/pec.

Rockwell Otomasyon Ticaret A.Ş. Kar Plaza İş Merkezi E Blok Kat:6 34752, İçerenköy, İstanbul, Tel: +90 (216) 5698400 EEE Yönetmeliğine Uygundur

Connect with us.

rockwellautomation.com — expanding **human possibility**®

AMERICAS: Rockwell Automation, 1201 South Second Street, Milwaukee, WI 53204-2496 USA, Tel: (1) 414.382.2000
EUROPE/MIDDLE EAST/AFRICA: Rockwell Automation NV, Pegasus Park, De Kleetlaan 12a, 1831 Diegem, Belgium, Tel: (32) 2663 0600
ASIA PACIFIC: Rockwell Automation SEA Pte Ltd, 2 Corporation Road, #04-05, Main Lobby, Corporation Place, Singapore 618494, Tel: (65) 6510 6608
UNITED KINGDOM: Rockwell Automation Ltd., Pitfield, Kiln Farm, Milton Keynes, MK11 3DR, United Kingdom, Tel: (44)(1908) 838-800

Publication IC-TD001M-EN-P - April 2024
Supersedes Publication IC-TD001L-EN-P - March 2020

Copyright © 2024 Rockwell Automation, Inc. All rights reserved. Printed in the U.S.A.