Installation Instructions

Original Instructions

ControlLogix Redundant Power Supply

Catalog Numbers 1756-PA75R, 1756-PB75R, 1756-PSCA2, 1756-PBXTR, 1756-PSCA2XT, 1756-PAXTR, 1756-PA75RK, 1756-PB75RK, 1756-PSCA2K

Topic	Page
Summary of Changes	5
Components of the Redundant System	5
Tools Required	6
Parts Required	6
Install the Chassis Adapter	6
Install the Redundant Power Supplies	6
Connect the Power	7
Remove the Protective Label	9
Troubleshoot the Redundant Power Supplies	10
Remove or Replace a Redundant Power Supply	11
Remove or Replace a Chassis Adapter	11
Specifications	12
Additional Resources	13

The redundant power supply system provides additional uptime protection for chassis that are used in critical applications. The two remotely mounted supplies are designed to share the current required by the chassis. Two supplies are available in AC (catalog number 1756-PA75R/A or 1756-PAXTR) and DC (catalog number 1756-PB75R/A or 1756-PBXTR) versions that can be mixed or matched when used in tandem.

If one power supply fails, the remaining supply accommodates the entire load of the chassis without disruption to chassis activity. The ControlLogix® redundant power supply system is designed to account for operational anomalies in only the power supply (the chassis adapter and power supply cables are excluded).

The 1756-PSCA2 chassis adapter is a passive device. The chassis adapter funnels power from one or two ControlLogix redundant power supplies to the single power connector on the ControlLogix chassis backplane.

Redundant Power Supply and Chassis Compatibility

Your chassis series determines the redundant power supply that you can use. This table lists the chassis that can be installed with each redundant power supply.

Power Supply Cat. No.	Chassis Cat. No.
1756-PA75R	1756-A4/B, 1756-A7/B, 1756-A10/B, 1756-A13/B, 1756-A17/B 1756-A4/C, 1756-A7/C, 1756-A10/C, 1756-A13/C, 1756-A17/C
1756-PB75R	
1756-PAXTR(1)	1756-A4/B, 1756-A7/B, 1756-A10/B, 1756-A13/B, 1756-A17/B, 1756-A4LXT/B, 1756-A5XT/B, 1756-A7LXT/B, 1756-A7XT/B 1756-A4/C, 1756-A7/C, 1756-A10/C, 1756-A13/C, 1756-A17/C, 1756-A7XT/C
1756-PBXTR(1)	

(1) The 1756-PAXTR and 1756-PBXTR redundant power supplies are only rated from 0…60 °C (32…140 °F) when used in non-XT chassis.

ATTENTION: Read this document and the documents listed in the Additional Resources section about installation, configuration and operation of this equipment before you install, configure, operate or maintain this product. Users are required to familiarize themselves with installation and wiring instructions in addition to requirements of all applicable codes, laws, and standards.

Activities including installation, adjustments, putting into service, use, assembly, disassembly, and maintenance are required to be carried out by suitably trained personnel in accordance with applicable code of practice.

If this equipment is used in a manner not specified by the manufacturer, the protection provided by the equipment may be impaired.

注意：在安装、配置、操作和维护本产品前，请阅读本文档以及 “ 其他资源 ” 部分列出的有关设备安装、配置和操作的相应文档。除了所有适用规范、法律和标准的相关要求之外，用户还必须熟悉安装和接线说明。

安装、调整、投运、使用、组装、拆卸和维护等各项操作必须由经过适当训练的专业人员按照适用的操作规范实施。

如果未按照制造商指定的方式使用该设备，则可能会损害设备提供的保护。

ATENCIÓN: Antes de instalar, configurar, poner en funcionamiento o realizar el mantenimiento de este producto, lea este documento y los documentos listados en la sección Recursos adicionales acerca de la instalación, configuración y operación de este equipo. Los usuarios deben familiarizarse con las instrucciones de instalación y cableado y con los requisitos de todos los códigos, leyes y estándares vigentes.

El personal debidamente capacitado debe realizar las actividades relacionadas a la instalación, ajustes, puesta en servicio, uso, ensamblaje, desensamblaje y mantenimiento de conformidad con el código de práctica aplicable.

Si este equipo se usa de una manera no especificada por el fabricante, la protección provista por el equipo puede resultar afectada.

ATENÇÃO: Leia este e os demais documentos sobre instalação, configuração e operação do equipamento que estão na seção Recursos adicionais antes de instalar, configurar, operar ou manter este produto. Os usuários devem se familiarizar com as instruções de instalação e fiação além das especificações para todos os códigos, leis e normas aplicáveis.

É necessário que as atividades, incluindo instalação, ajustes, colocação em serviço, utilização, montagem, desmontagem e manutenção sejam realizadas por pessoal qualificado e especializado, de acordo com o código de prática aplicável.

Caso este equipamento seja utilizado de maneira não estabelecida pelo fabricante, a proteção fornecida pelo equipamento pode ficar prejudicada.

ВНИМАНИЕ: Перед тем как устанавливать, настраивать, эксплуатировать или обслуживать данное оборудование, прочитайте этот документ и документы, перечисленные в разделе «Дополнительные ресурсы». В этих документах изложены сведения об установке, настройке и эксплуатации данного оборудования. Пользователи обязаны ознакомиться с инструкциями по установке и прокладке соединений, а также с требованиями всех применимых норм, законов и стандартов.

Все действия, включая установку, наладку, ввод в эксплуатацию, использование, сборку, разборку и техническое обслуживание, должны выполняться обученным персоналом в соответствии с применимыми нормами и правилами.

Если оборудование используется не предусмотренным производителем образом, защита оборудования может быть нарушена.

注意： 本製品を設置、構成、稼動または保守する前に、本書および本機器の設置、設定、操作についての参考資料の該当箇所に記載されている文書に目を通してください。ユーザは、すべての該当する条例、法律、規格の要件に加えて、設置および配線の手順に習熟している必要があります。

設置調整、運転の開始、使用、組立て、解体、保守を含む諸作業は、該当する実施規則に従って訓練を受けた適切な作業員が実行する必要があります。

本機器が製造メーカにより指定されていない方法で使用されている場合、機器により提供されている保護が損なわれる恐れがあります。

ACHTUNG: Lesen Sie dieses Dokument und die im Abschnitt „Weitere Informationen“aufgeführten Dokumente, die Informationen zu Installation, Konfiguration und Bedienung dieses Produkts enthalten, bevor Sie dieses Produkt installieren, konfigurieren, bedienen oder warten. Anwender müssen sich neben den Bestimmungen aller anwendbaren Vorschriften, Gesetze und Normen zusätzlich mit den Installations- und Verdrahtungsanweisungen vertraut machen.

Arbeiten im Rahmen der Installation, Anpassung, Inbetriebnahme, Verwendung, Montage, Demontage oder Instandhaltung dürfen nur durch ausreichend geschulte Mitarbeiter und in Übereinstimmung mit den anwendbaren Ausführungsvorschriften vorgenommen werden.

Wenn das Gerät in einer Weise verwendet wird, die vom Hersteller nicht vorgesehen ist, kann die Schutzfunktion beeinträchtigt sein.

ATTENTION : Lisez ce document et les documents listés dans la section Ressources complémentaires relatifs à l'installation, la configuration et le fonctionnement de cet équipement avant d'installer, configurer, utiliser ou entretenir ce produit. Les utilisateurs doivent se familiariser avec les instructions d'installation et de câblage en plus des exigences relatives aux codes, lois et normes en vigueur.

Les activités relatives à l'installation, le réglage, la mise en service, l'utilisation, l'assemblage, le démontage et l'entretien doivent être réalisées par des personnes formées selon le code de pratique en vigueur.

Si cet équipement est utilisé d'une façon qui n'a pas été définie par le fabricant, la protection fournie par l'équipement peut être compromise.

주의 : 본 제품 설치 , 설정 , 작동 또는 유지 보수하기 전에 본 문서를 포함하여 설치 , 설정 및 작동에 관한 참고 자료 섹션의 문서들을 반드시 읽고 숙지하십시오 . 사용자는 모든 관련 규정 , 법규 및 표준에서 요구하는 사항에 대해 반드시 설치 및 배선 지침을 숙지해야 합니다 .

설치 , 조정 , 가동 , 사용 , 조립 , 분해 , 유지보수 등 모든 작업은 관련 규정에 따라 적절한 교육을 받은 사용자를 통해서만 수행해야 합니다 .

본 장비를 제조사가 명시하지 않은 방법으로 사용하면 장비의 보호 기능이 손상될 수 있습니다 .

ATTENZIONE Prima di installare, configurare ed utilizzare il prodotto, o effettuare interventi di manutenzione su di esso, leggere il presente documento ed i documenti elencati nella sezione "Altre risorse", riguardanti l'installazione, la configurazione ed il funzionamento dell'apparecchiatura. Gli utenti devono leggere e comprendere le istruzioni di installazione e cablaggio, oltre ai requisiti previsti dalle leggi, codici e standard applicabili.

Le attività come installazione, regolazioni, utilizzo, assemblaggio, disassemblaggio e manutenzione devono essere svolte da personale adeguatamente addestrato, nel rispetto delle procedure previste.

Qualora l'apparecchio venga utilizzato con modalità diverse da quanto previsto dal produttore, la sua funzione di protezione potrebbe venire compromessa.

DİKKAT: Bu ürünün kurulumu, yapılandırılması, işletilmesi veya bakımı öncesinde bu dokümanı ve bu ekipmanın kurulumu, yapılandırılması ve işletimi ile ilgili İlave Kaynaklar bölümünde yer listelenmiş dokümanları okuyun. Kullanıcılar yürürlükteki tüm yönetmelikler, yasalar ve standartların gereksinimlerine ek olarak kurulum ve kablolama talimatlarını da öğrenmek zorundadır.

Kurulum, ayarlama, hizmete alma, kullanma, parçaları birleştirme, parçaları sökme ve bakım gibi aktiviteler sadece uygun eğitimleri almış kişiler tarafından yürürlükteki uygulama yönetmeliklerine uygun şekilde yapılabilir.

Bu ekipman üretici tarafından belirlenmiş amacın dışında kullanılırsa, ekipman tarafından sağlanan koruma bozulabilir.

注意事項：在安裝、設定、操作或維護本產品前，請先閱讀此文件以及列於 「其他資源」章節中有關安裝、設定與操作此設備的文件。使用者必須熟悉安裝和配線指示，並符合所有法規、法律和標準要求。

包括安裝、調整、交付使用、使用、組裝、拆卸和維護等動作都必須交由已經過適當訓練的人員進行，以符合適用的實作法規。

如果將設備用於非製造商指定的用途時，可能會造成設備所提供的保護功能受損。

POZOR: Než začnete instalovat, konfigurovat či provozovat tento výrobek nebo provádět jeho údržbu, přečtěte si tento dokument a dokumenty uvedené v části Dodatečné zdroje ohledně instalace, konfigurace a provozu tohoto zařízení. Uživatelé se musejí vedle požadavků všech relevantních vyhlášek, zákonů a norem nutně seznámit také s pokyny pro instalaci a elektrické zapojení.

Činnosti zahrnující instalaci, nastavení, uvedení do provozu, užívání, montáž, demontáž a údržbu musí vykonávat vhodně proškolený personál v souladu s příslušnými prováděcími předpisy.

Pokud se toto zařízení používá způsobem neodpovídajícím specifikaci výrobce, může být narušena ochrana, kterou toto zařízení poskytuje.

UWAGA: Przed instalacją, konfiguracją, użytkowaniem lub konserwacją tego produktu należy przeczytać niniejszy dokument oraz wszystkie dokumenty wymienione w sekcji Dodatkowe źródła omawiające instalację, konfigurację i procedury użytkowania tego urządzenia. Użytkownicy mają obowiązek zapoznać się z instrukcjami dotyczącymi instalacji oraz oprzewodowania, jak również z obowiązującymi kodeksami, prawem i normami.

Działania obejmujące instalację, regulację, przekazanie do użytkowania, użytkowanie, montaż, demontaż oraz konserwację muszą być wykonywane przez odpowiednio przeszkolony personel zgodnie z obowiązującym kodeksem postępowania.

Jeśli urządzenie jest użytkowane w sposób inny niż określony przez producenta, zabezpieczenie zapewniane przez urządzenie może zostać ograniczone.

OBS! Läs detta dokument samt dokumentet, som står listat i avsnittet Övriga resurser, om installation, konfigurering och drift av denna utrustning innan du installerar, konfigurerar eller börjar använda eller utföra underhållsarbete på produkten. Användare måste bekanta sig med instruktioner för installation och kabeldragning, förutom krav enligt gällande koder, lagar och standarder.

Åtgärder som installation, justering, service, användning, montering, demontering och underhållsarbete måste utföras av personal med lämplig utbildning enligt lämpligt bruk.

Om denna utrustning används på ett sätt som inte anges av tillverkaren kan det hända att utrustningens skyddsanordningar försätts ur funktion.

LET OP: Lees dit document en de documenten die genoemd worden in de paragraaf Aanvullende informatie over de installatie, configuratie en bediening van deze apparatuur voordat u dit product installeert, configureert, bediend of onderhoudt. Gebruikers moeten zich vertrouwd maken met de installatie en de bedradingsinstructies, naast de vereisten van alle toepasselijke regels, wetten en normen.

Activiteiten zoals het installeren, afstellen, in gebruik stellen, gebruiken, monteren, demonteren en het uitvoeren van onderhoud mogen uitsluitend worden uitgevoerd door hiervoor opgeleid personeel en in overeenstemming met de geldende praktijkregels.

Indien de apparatuur wordt gebruikt op een wijze die niet is gespecificeerd door de fabrikant, dan bestaat het gevaar dat de beveiliging van de apparatuur niet goed werkt.

Before You Begin

ATTENTION: Before installing, configuring, operating, or maintaining this product, read this document and the documents listed in the additional resources section for installing, configuring, or operating equipment. Users should familiarize themselves with installation and wiring instructions in addition to requirements of all applicable codes, laws, and standards.

Installation, adjustments, putting into service, use, assembly, disassembly, and maintenance shall be carried out by suitably trained personnel in accordance with applicable code of practice. In case of malfunction or damage, no attempts at repair should be made. The module should be returned to the manufacturer for repair. Do not dismantle the module.

This equipment is certified for use only within the surrounding air temperature range of 0…60 °C (32…140 °F) [PA75R, PB75R, PSCA2] -25…+70 °C (-13…+158 °F) [PAXTR, PBXTR, PSCA2XT]. The equipment must not be used outside of this range.

Annunciator cable length should be less than 10 m (32.8 ft).

Use only a soft dry anti-static cloth to wipe down equipment. Do not use any cleaning agents.

Environment and Enclosure

ATTENTION: This equipment is intended for use in a Pollution Degree 2 industrial environment, in overvoltage Category II applications (as defined in IEC 60664-1), at altitudes up to 2000 m (6562 ft) without derating.

This equipment is not intended for use in residential environments and may not provide adequate protection to radio communication services in such environments.

This equipment is supplied as open-type equipment for indoor use. It must be mounted within an enclosure that is suitably designed for those specific environmental conditions that will be present and appropriately designed to prevent personal injury resulting from accessibility to live parts. The enclosure must have suitable flame-retardant properties to prevent or minimize the spread of flame, complying with a flame spread rating of 5VA or be approved for the application if nonmetallic. The interior of the enclosure must be accessible only by the use of a tool. Subsequent sections of this publication may contain additional information regarding specific enclosure type ratings that are required to comply with certain product safety certifications.

In addition to this publication, see the following:

- Industrial Automation Wiring and Grounding Guidelines, publication 1770-4.1, for additional installation requirements.
- NEMA Standard 250 and EN/IEC 60529, as applicable, for explanations of the degrees of protection provided by enclosures.

North American Hazardous Location Approval

The following information applies when operating this equipment in hazardous locations.		**Informations sur l'utilisation de cet équipement en environnements dangereux.**	
Products marked "CL I, DIV 2, GP A, B, C, D" are suitable for use in Class I Division 2 Groups A, B, C, D, Hazardous Locations and nonhazardous locations only. Each product is supplied with markings on the rating nameplate indicating the hazardous location temperature code. When combining products within a system, the most adverse temperature code (lowest "T" number) may be used to help determine the overall temperature code of the system. Combinations of equipment in your system are subject to investigation by the local Authority Having Jurisdiction at the time of installation.		Les produits marqués "CL I, DIV 2, GP A, B, C, D" ne conviennent qu'à une utilisation en environnements de Classe I Division 2 Groupes A, B, C, D dangereux et non dangereux. Chaque produit est livré avec des marquages sur sa plaque d'identification qui indiquent le code de température pour les environnements dangereux. Lorsque plusieurs produits sont combinés dans un système, le code de température le plus défavorable (code de température le plus faible) peut être utilisé pour déterminer le code de température global du système. Les combinaisons d'équipements dans le système sont sujettes à inspection par les autorités locales qualifiées au moment de l'installation.	
	WARNING: Explosion Hazard • Do not disconnect equipment unless power has been removed or the area is known to be nonhazardous. • Do not disconnect connections to this equipment unless power has been removed or the area is known to be nonhazardous. Secure any external connections that mate to this equipment by using screws, sliding latches, threaded connectors, or other means provided with this product. • Substitution of components may impair suitability for Class I, Division 2. • If this product contains batteries, they must only be changed in an area known to be nonhazardous.		**AVERTISSEMENT: Risque d'Explosion** • Couper le courant ou s'assurer que l'environnement est classé non dangereux avant de débrancher l'équipement. • Couper le courant ou s'assurer que l'environnement est classé non dangereux avant de débrancher les connecteurs. Fixer tous les connecteurs externes reliés à cet équipement à l'aide de vis, loquets coulissants, connecteurs filetés ou autres moyens fournis avec ce produit. • La substitution de composants peut rendre cet équipement inadapté à une utilisation en environnement de Classe I, Division 2. • S'assurer que l'environnement est classé non dangereux avant de changer les piles.

European Hazardous Location Approval

The following applies to products marked CE, Ex, II 3, such modules:

- Are Equipment Group II, Equipment Category 3, and comply with the Essential Health and Safety Requirements relating to the design and construction of such equipment given in Annex II to Directive 94/9/EC. See the EC Declaration of Conformity at rok.auto/certifications for details. The type of protection for the 1756-PB75R, 1756-PBXTR, 1756-PSCA2, and 1756-PSCA2XT is "Ex nA IIC T4 Gc" according to EN 60079-15.
- May have Catalog numbers followed by a "K" to indicate a conformal coating option.
- Are intended for use in areas in which explosive atmospheres caused by gases, vapors, mists, or air are unlikely to occur, or are likely to occur only infrequently and for short periods. Such locations correspond to Zone 2 classification according to ATEX directive 1999/92/EC.
- As the 1756-PB75R, 1756-PBXTR, 1756-PSCA2, and 1756-PSCA2XT comply to Standards: EN 60079-0:2012+A11:2013, EN 60079-15:2010, reference certificate number DEMKO13ATEX1325026X.

WARNING: Special Conditions for Safe Use

- This equipment shall be mounted in an ATEX/IECEx Zone 2 certified enclosure with a minimum ingress protection rating of at least IP54 (as defined in EN/IEC 60529) and used in an environment of not more than Pollution Degree 2 (as defined in EN/IEC 60664-1) when applied in Zone 2 environments. The enclosure must be accessible only by the use of a tool.
- This equipment shall be used within its specified ratings defined by Rockwell Automation.
- Secure any external connections that mate to this equipment by using screws, sliding latches, threaded connectors, or other means provided with this product.
- Do not disconnect equipment unless power has been removed or the area is known to be nonhazardous.
- Provision shall be made to prevent the rated voltage from being exceeded by transient disturbances of more than 140% of the rated voltage when applied in Zone 2 environments.
- This equipment must be used only with ATEX/IECEx certified Rockwell Automation backplanes.
- The instructions in the user manual shall be observed.

IEC Hazardous Location Approval

The following applies to products with IECEx Certification.

- Such modules are intended for use in areas in which explosive atmospheres caused by gases, vapors, mists, or air are unlikely to occur, or are likely to occur only infrequently and for short periods. Such locations correspond to Zone 2 classification to IEC 60079-0.
- The type of protection for the 1756-PB75R, 1756-PBXTR, 1756-PSCA2, and 1756-PSCA2XT is "Ex nA IIC T4 Gc" according to IEC 60079-15.
- Such modules as the 1756-PB75R, 1756-PBXTR, 1756-PSCA2, and 1756-PSCA2XT comply to Standards IEC 60079-0:2011, IEC 60079-15:2010, reference IECEx certificate number IECExUL14.0008X.
- Such modules may have catalog numbers followed by a "K" to indicate a conformal coating option.

ATEX and IECEx Hazardous Location Conformity

Model	Protection Type	ATEX Certificate	IECEx Certificate
1756-PSCA2	Ex nA IIC T4 Gc	DEMKO13ATEX1325026X	IECEx UL 14.0008X
1756-PSCA2XT	Ex nA IIC T4 Gc	DEMKO13ATEX1325026X	IECEx UL 14.0008X
1756-PAXTR	None	—	—
1756-PBXTR	Ex nA IIC T4 Gc	DEMKO13ATEX1325026X	IECEx UL 14.0008X
1756-PA75R	None	—	—
1756-PB75R	Ex nA IIC T4 Gc	DEMKO13ATEX1325026X	IECEx UL 14.0008X

Prevent Electrostatic Discharge

ATTENTION: This equipment is sensitive to electrostatic discharge, which can cause internal damage and affect normal operation. Follow these guidelines when you handle this equipment:

- Touch a grounded object to discharge potential static.
- Wear an approved grounding wrist strap.
- Do not touch connectors or pins on component boards.
- Do not touch circuit components inside the equipment.
- Use a static-safe workstation, if available.
- Store the equipment in appropriate static-safe packaging when not in use.

Removable Terminal Blocks (RTBs) for I/O Connections

WARNING: EXPLOSION HAZARD
When you connect or disconnect the removable terminal block (RTB) with field side power applied, an electric arc can occur. This could cause an explosion in hazardous location installations.

Be sure that power is removed or the area is nonhazardous before proceeding.

Summary of Changes

We updated the torque requirement on pages 7 and 12 for these power supplies.

Components of the Redundant System

The following graphic (series C chassis depicted) shows the components of a redundant system in a typical configuration.

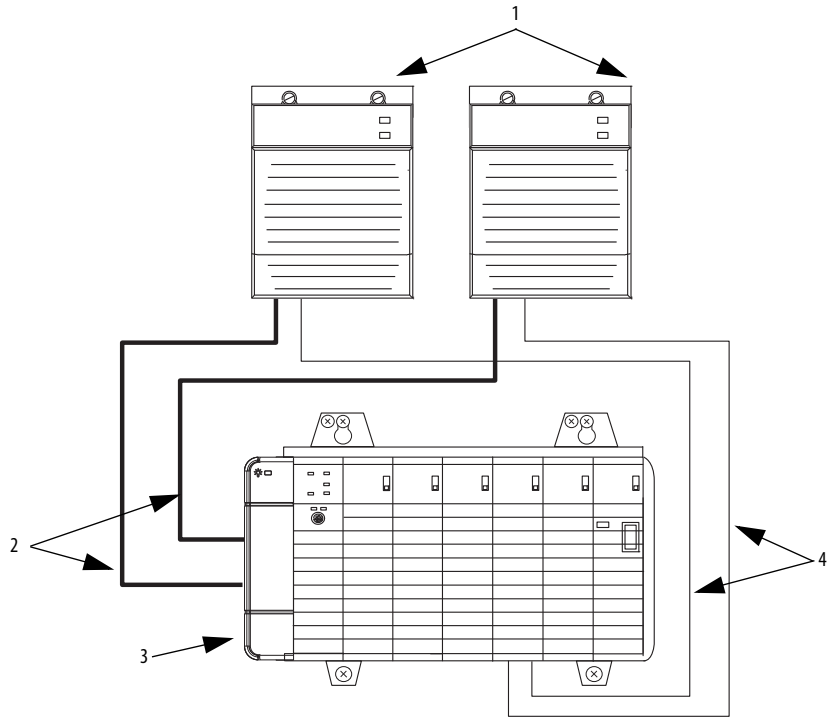

IMPORTANT The ControlLogix redundant power supply system is designed to account for operational anomalies in only the power supply. The chassis adapter and power supply cables are excluded.

Item	Description	Cat. No.
1	Redundant power supply	1756-PA75R/A and/or 1756-PB75R/A or 1756-PAXTR and/or 1756-PBXTR
2	Redundant power supply cable (Length = 0.91 m [3 ft])	1756-CPR2(2)(3) or 1756-CPR2D(3)(4) or 1756-CPR2U(3)(4)
3	Redundant power supply chassis adapter	1756-PSCA2 or 1756-PSCA2XT
4	Annunciator wiring(1) (Maximum length = 10 m [32.8 ft])	User-supplied

(1) Optional user-provided annunciator wiring can be connected to the solid-state relay for status and for troubleshooting. See page 8 for more information.
(2) Cable bend radius is 12.7 cm (5.0 in.).
(3) Cable bend radius can be greater than or less than the minimum mounting clearance of the chassis. **Always maintain** chassis minimum mounting clearance.
(4) Requires 10.16 cm (4.0 in.) of clearance next to the chassis adapter.

Tools Required

When installing your chassis and power supplies, the following items are required:

- 3.18 mm (0.125 in.) slotted screwdriver
- 6.35 mm (0.25 in.) slotted or #2 Phillips screwdriver
- Torque screwdriver
- Needle-nose pliers
- Crimper
- Wire stripper
- Drill

Parts Required

Each redundant power supply requires four #10 Phillips screws for installation. Eight #10 Phillips screws are required to install two redundant power supplies.

Install the Chassis

IMPORTANT Install the chassis in the enclosure and make sure that you follow the minimum spacing requirements. See the ControlLogix Chassis Installation Instructions, publication 1756-IN621 for more information.

Install the Chassis Adapter

1. Align the circuit board of the 1756-PSCA2 or 1756-PSCA2XT chassis adapter with the card guides on the left side of the chassis.
2. Slide the adapter back until it is flush with the front of the chassis.

WARNING: EXPLOSION HAZARD
If you connect or disconnect the 1756-CPR2 cables while either backplane power source is on, an electric arc can occur. This could cause an explosion in hazardous location installations. Repeated electric arcing causes excessive wear to contacts on both the module and its mating connector. Worn contacts may create electrical resistance that can affect module operation.

Be sure that power is removed or the area is nonhazardous before proceeding.

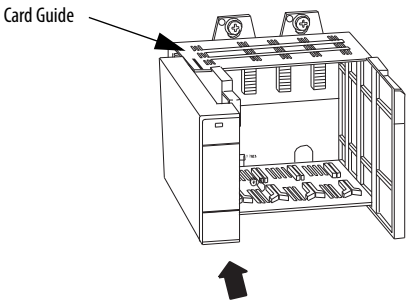

Install the Redundant Power Supplies

IMPORTANT Install the redundant power supplies in the enclosure and make sure that you follow the minimum spacing requirements. See the ControlLogix Chassis Installation Instructions, publication 1756-IN621, for more information.

Follow these steps to install your redundant power supplies.

1. Drill holes in the back panel of the enclosure for the redundant power supply.

ATTENTION: Do not drill holes for a redundant power supply above installed equipment. Metal chips from drilling can damage the backplane and cause intermittent operation.

2. Insert the #10 Phillips screws into the top mounting holes, but do not tighten completely.
3. Slide the redundant power supply over the installed screws and tighten the screws.
4. Insert the bottom screws and tighten them.
5. Repeat these steps for additional power supplies.

Connect the Power

WARNING: EXPLOSION HAZARD
If you connect or disconnect the 1756-CPR2 cables while either backplane power source is on, an electric arc can occur. This could cause an explosion in hazardous location installations. Repeated electric arcing causes excessive wear to contacts on both the module and its mating connector. Worn contacts may create electrical resistance that can affect module operation.

Be sure that power is removed or the area is nonhazardous before proceeding.

Use the 1756-CPR2, 1756-CPR2D, or 1756-CPR2U cable to connect your redundant power supply to the 1756-PSCA2 or 1756-PSCA2XT chassis adapter.

1. Connect the male end of the power cable to the chassis adapter (series C depicted).

1756-CPR2

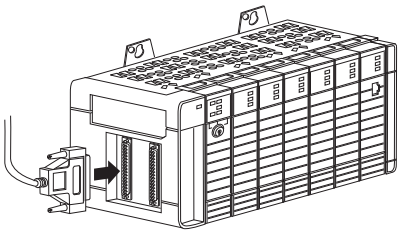

1756-CPR2D

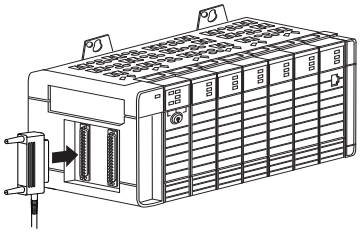

1756-CPR2U

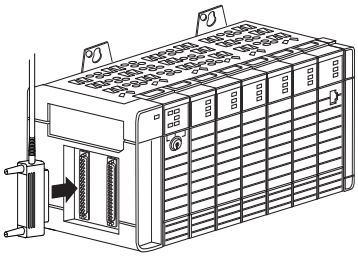

2. Connect the female end of the power cable to the redundant power supply.
3. Tighten the screws to hold the cable in place.

   Make sure that you tighten the screws securely to hold the cable in place for the life of the product.
4. Repeat these steps with the second redundant power supply.

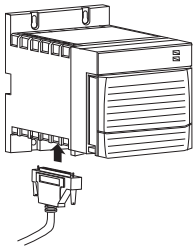

WARNING: EXPLOSION HAZARD
If you connect or disconnect wiring while the field-side power is on, an electric arc can occur. This can cause an explosion in hazardous location installations. Be sure that power is removed or the area is nonhazardous before proceeding.

ATTENTION: Do not wire more than one conductor on any single terminal.

Use a 15 A time-delay type fuse in all ungrounded power connections.

Use 2.5 mm^2 (14 AWG) solid or stranded-copper wire that is rated at 90 °C (194 °F), or greater, 1.2 mm (3/64 in.) insulation maximum to connect power. Tighten the terminals to a torque of 0.565 N•m (5 lb•in).

Connect the power as shown in the following figure.

IMPORTANT The voltage input connections of the power supplies are auto-sensing.

You do **not** use a jumper, for example, a 120/240V AC jumper, when connecting external power to the power supply, as shown in the previous figure.

1756-PA75R/A (AC)

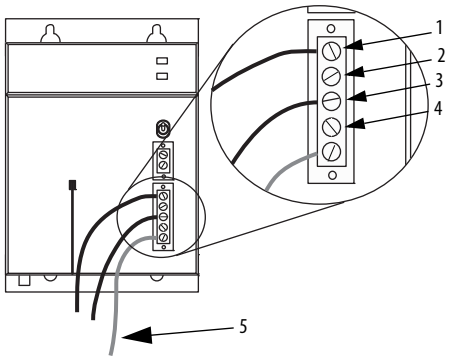

1756-PB75R/A (DC)

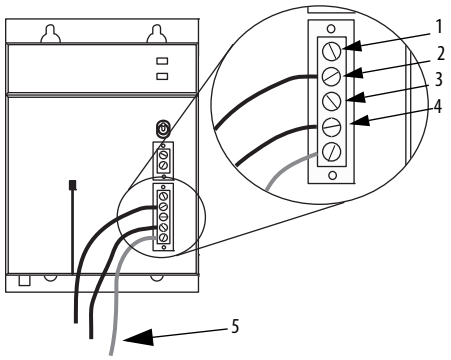

Item	Description, 1756-PA75R/A (AC)	Description, 1756-PB75R/A (DC)
1	L1 (high side of line power)	Not used
2	Not used	DC+ (positive supply)
3	L2 (low side of line power)	Not used
4	Not used	DC- (negative supply return)
5	Protective Earth. Attach to chassis ground lug or ground bus. See the ControlLogix Chassis Installation Instructions, publication 1756-IN621, for details.	

Connect the Solid-state Relay

A solid-state relay on your redundant power supplies can be connected to any compatible monitoring or signaling device. This connection indicates if the supplies are functioning properly.

The relays are closed during standard operation. The solid-state relay contacts open if one of these events occurs:

- One or more of the supplies fail.
- In this case, the contact opens on the failed supply (or supplies), and the input module alerts you to the failure through the controller program.
- The connected redundant power supplies are turned OFF.

When you use the solid-state relay annunciator function, connect a compatible source voltage to a contact terminal. Then connect the other terminal to the monitoring or signaling device.

ATTENTION: Annunciator cable length must be less than 10 m (32.8 ft).

The annunciator output is rated only for resistive loads. Do not use it to drive the coil of an electromagnetic relay.

Connect the solid-state relay as shown in the following figure.

Solid-state Relay Connection

Configuration 1

Routing of annunciator cable when annunciator voltage and input voltage are different.

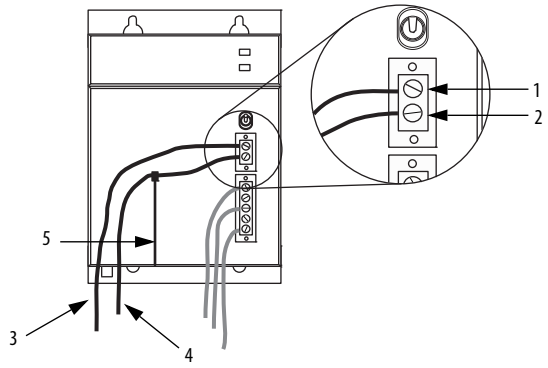

The annunciator wiring must be tucked under the tab at the top of the plastic barrier and routed separately from the power wires.

Configuration 2

Routing of annunciator cable when annunciator voltage and input voltage are the same.

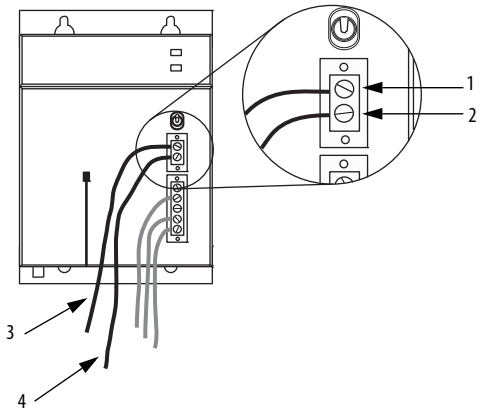

Item	Description
1	Source voltage
2	Annunciator cable to input module
3	0.25…2.5 mm^2 (22…14 AWG) solid or stranded-copper wire rated at 90 °C (194 °F), or greater, 1.2 mm (3/64 in.) insulation max
4	0.25…2.5 mm^2 (22…14 AWG) solid or stranded-copper wire rated at 90 °C (194 °F), or greater, 1.2 mm (3/64 in.) insulation max
5	Plastic barrier

Remove the Protective Label

ATTENTION: Make sure the power supply is mounted and all panel fabrication is complete before you remove the protective label. This label protects the power supply from metal shavings falling inside the power supply and damaging it during operation.

Remove the protective label from the top of the power supply.

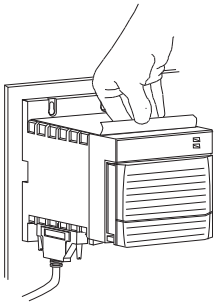

Troubleshoot the Redundant Power Supplies

The redundant power supplies have a green status indicator for power and an amber status indicator for non-redundancy.

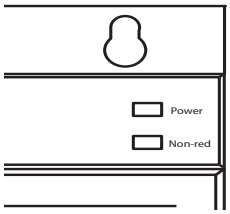

The Status Indicators table describes how to use the status indicators to troubleshoot your redundant power supplies.

Status Indicators

Power Indicator	Non-red Indicator	Description	Take This Action
Solid green	Off	The power supplies are operating properly.	None
Solid green	Solid amber	This power supply is operating properly, but is the only power supply providing power to the chassis adapter.	Check the other power supply.
Off	Solid amber	All possible connections are made, but the power supply is turned off.	Turn the power supply ON. If the power supply does not turn ON, follow these steps. 1. Remove the input power from the power supply. 2. Wait 30 seconds. 3. Reconnect the input power. 4. Turn the power supply ON. If the power supply still does not turn ON, it can require replacement.
Off	Off	Any of the following conditions can apply:	Take the corresponding action:
		The supply is turned OFF.	Turn the power supply ON.
		Line voltage is not within the specified range.	Verify that line power is in the specified range. If the indicators remain OFF, cycle power.
		All connections are made, but input power is not supplied.	Verify that input power is supplied and turn the power supply ON.
		All connections are made, including input power, but the output cable (1756-CPR2) is not connected.	Connect the output cable and turn the power supply ON.
		The power supply is ON but defective.	The power supply can require replacement.

Chassis Adapter Status Indicator

The chassis adapter has a green power status indicator. When the status indicator is solid green, the chassis is receiving power from the redundant power supplies. If the indicator is off, the chassis is not receiving power from the redundant power supplies. See the Status Indicators table to troubleshoot the redundant power supplies.

Remove or Replace a Redundant Power Supply

WARNING: EXPLOSION HAZARD
Remove or replace power supplies only when backplane and power supply power are removed or the area is known to be nonhazardous. Removal or replacement of a power supply in a hazardous area can cause an electric arc across the contacts if backplane power is still applied.

IMPORTANT You can replace one redundant power supply while the other supply is operating in nonredundant mode without any affect on chassis operation.

If you must only replace a redundant power supply cable, we recommend that you do this replacement when the conditions permit the removal of all system power.

Remove a Redundant Power Supply

Follow these steps to remove the redundant power supply.

1. Turn the redundant power supply OFF.
2. Disconnect the line power source voltage from the redundant power supply and annunciator.
3. Remove the wiring terminal blocks.
4. Unscrew and disconnect the 1756-CPR2, 1756-CPR2D, or 1756-CPR2U cable at the power supply.
5. Remove the bottom mounting screws.
6. Loosen the top mounting screws and slide the supply up and off the mounting screws.

Replace a Redundant Power Supply

Follow these steps to replace a redundant power supply.

1. Slide the redundant power supply over the top mounting screws and tighten them.
2. Install the bottom mounting screws.
3. Reconnect the 1756-CPR2, 1756-CPR2D, or 1756-CPR2U cable at the power supply.
4. Install the wiring terminal blocks.
5. Connect the line power source voltage to the redundant power supply and annunciator.
6. Turn the redundant power supply ON.

   When you turn ON the replacement redundant power supply, the connected chassis automatically draws power from the redundant power supplies.

Remove or Replace a Chassis Adapter

Use this information to remove or replace a chassis adapter.

Remove a Chassis Adapter

Follow these steps to remove a chassis adapter.

1. Turn the redundant power supplies OFF.
2. Disconnect the power cable at the chassis adapter.
3. Push the top and bottom locking tabs on the chassis adapter to the side and pull the module off the chassis.

Replace a Chassis Adapter

1. Align the circuit board of the adapter with the card guides on the left side of the chassis.
2. Slide the adapter back until it is flush with the front of the chassis.

Specifications

Attribute	1756-PSCA2/ 1756-PSCA2K	1756-PSCA2XT	1756-PAXTR	1756-PBXTR	1756-PA75R/ 1756-PA75RK	1756-PB75R/ 1756-PB75RK
Voltage and current ratings Input	N/A	N/A	120/240V AC, 50/60 Hz, 75VA, 65 W	24V DC, 81W	120/240V AC, 50/60 Hz, 120VA, 115 W	24V DC, 110 W
Output (current capacity)	2.8 A, 24V DC; 15.0 A, 5.1V DC; 4.0 A, 3.3V DC; 1.5 A, 1.2V DC	2.8 A, 24V DC; 15.0 A, 5.1V DC; 4.0 A, 3.3V DC; 1.5 A, 1.2V DC	1.75 A, 24V DC; 8.0 A, 5.1V DC; 4.0 A, 3.3V DC; 1.5 A, 1.2V DC; 42 W max, 20 A inrush max	2.1 A, 24V DC; 10.0 A, 5.1V DC; 4.0 A, 3.3V DC; 1.5 A, 1.2V DC; 52 W max, 30 A inrush max	2.8 A, 24V DC; 13.0 A, 5.1V DC; 4.0 A, 3.3V DC; 1.5 A, 1.2V DC; 75 W max, 20 A inrush max	2.8 A, 24V DC; 13.0 A, 5.1V DC; 4.0 A, 3.3V DC; 1.5 A, 1.2V DC; 75 W max, 20 A inrush max
Annunciator	N/A	N/A	240V AC 50/60 HZ, 240V DC, 50 mA, resistive only	240V AC 50/60 HZ, 240V DC, 50 mA, resistive only 90V DC for ATEX/IECEx	240V AC 50/60 HZ, 240V DC, 50 mA, resistive only	240V AC 50/60 HZ, 240V DC, 50 mA, resistive only 90V DC for ATEX/IECEx
Isolation voltage	N/A		250V (continuous), Reinforced Insulation Type, Power Input to Backplane, Power Input to Annunciator, Annunciator to Backplane			
All supply frequencies or frequency ranges, if AC supply is used	N/A		47…63 Hz	N/A	47…63 Hz	N/A
Temperature, operating IEC 60068-2-1 (Test Ad, Operating Cold), IEC 60068-2-2 (Test Bd, Operating Dry Heat), IEC 60068-2-14 (Test Nb, Operating Thermal Shock)	0 °C < Ta < +60 °C (32 °F < Ta < +140 °F)	-25 °C < Ta < +70 °C (-13°F < Ta < +158 °F)			0°C < Ta < +60 °C (32 °F < Ta < +140 °F)	
Temperature, surrounding air, max	60 °C (140 °F)	70 °C (158 °F)			60 °C (140 °F)	
Enclosure type rating	None (open-style)					
Torque	N/A		0.565 N•m (5 lb•in)			
Wire size	N/A		Power: 2.5 mm^2 (14 AWG) solid or stranded copper wire rated at 90 °C (194 °F), or greater, 1.2 mm (3/64 in.) insulation max Annunciator: 0.25…2.5 mm^2 (22…14 AWG) solid or stranded copper wire rated at 90 °C (194 °F), or greater, 1.2 mm (3/64 in.) insulation max			
Protective earth ground	N/A		2.5 mm^2 (14 AWG) solid or stranded copper wire rated at 90 °C (194 °F) or greater			
Pilot duty rating	N/A		Annunciator: Not Rated			
North American temperature code	T5	T4A			T3C	T4
ATEX temperature code	T4		-	T4	-	T4
IECEx temperature code	T4		-	T4	-	T4

Additional Resources

These documents contain additional information concerning related products from Rockwell Automation.

Resource	Description
1756 ControlLogix Communication Modules Specifications Technical Data, publication 1756-TD003	Describes Ethernet communication module specifications.
ControlLogix Chassis Installation Instructions, publication 1756-IN621	Provides information on installing ControlLogix chassis.
ControlLogix System User Manual, publication 1756-UM001	Provides instructions for installation and use of ControlLogix Systems, application design, and other general information for these systems.
Industrial Automation Wiring and Grounding Guidelines, publication 1770-4.1	Provides general guidelines for installing a Rockwell Automation industrial system.
Product Certifications website, http://www.rockwellautomation.com/rockwellautomation/certification/overview.page	Provides declarations of conformity, certificates, and other certification details.

You can view or download publications at http://www.rockwellautomation.com/global/literature-library/overview.page. To order paper copies of technical documentation, contact your local Allen-Bradley distributor or Rockwell Automation sales representative.

Notes:

Notes:

Rockwell Automation Support

Use the following resources to access support information.

Technical Support Center	Knowledgebase Articles, How-to Videos, FAQs, Chat, User Forums, and Product Notification Updates.	https://rockwellautomation.custhelp.com/
Local Technical Support Phone Numbers	Locate the phone number for your country.	http://www.rockwellautomation.com/global/support/get-support-now.page
Direct Dial Codes	Find the Direct Dial Code for your product. Use the code to route your call directly to a technical support engineer.	http://www.rockwellautomation.com/global/support/direct-dial.page
Literature Library	Installation Instructions, Manuals, Brochures, and Technical Data.	http://www.rockwellautomation.com/global/literature-library/overview.page
Product Compatibility and Download Center (PCDC)	Get help determining how products interact, check features and capabilities, and find associated firmware.	http://www.rockwellautomation.com/global/support/pcdc.page

Documentation Feedback

Your comments will help us serve your documentation needs better. If you have any suggestions on how to improve this document, complete the How Are We Doing? form at http://literature.rockwellautomation.com/idc/groups/literature/documents/du/ra-du002_-en-e.pdf.

Rockwell Automation maintains current product environmental information on its website at http://www.rockwellautomation.com/rockwellautomation/about-us/sustainability-ethics/product-environmental-compliance.page.

Allen-Bradley, ControlLogix, Rockwell Automation, and Rockwell Software are trademarks of Rockwell Automation, Inc.
Trademarks not belonging to Rockwell Automation are property of their respective companies.

Rockwell Otomasyon Ticaret A.Ş., Kar Plaza İş Merkezi E Blok Kat:6 34752 İçerenköy, İstanbul, Tel: +90 (216) 5698400

www.rockwellautomation.com

Power, Control and Information Solutions Headquarters

Americas: Rockwell Automation, 1201 South Second Street, Milwaukee, WI 53204-2496 USA, Tel: (1) 414.382.2000, Fax: (1) 414.382.4444
Europe/Middle East/Africa: Rockwell Automation NV, Pegasus Park, De Kleetlaan 12a, 1831 Diegem, Belgium, Tel: (32) 2 663 0600, Fax: (32) 2 663 0640
Asia Pacific: Rockwell Automation, Level 14, Core F, Cyberport 3, 100 Cyberport Road, Hong Kong, Tel: (852) 2887 4788, Fax: (852) 2508 1846

Publication 1756-IN620D-EN-P - October 2018
Supersedes Publication 1756-IN620C-EN-P - February 2017

PN-520118

Copyright © 2018 Rockwell Automation, Inc. All rights reserved. Printed in the U.S.A.