Technical Data

Original Instructions

PowerFlex 400 Adjustable Frequency AC Drives for Fan & Pump Applications

Topic	Page
Summary of Changes	2
Product Overview	3
Application Features	5
Product Selection Guide	8
Installation Considerations	14
Specifications	23
Configured Drives Programs	39
Human Interface Module (HIM) Dimensions	40
PowerFlex 400 Packaged Product Overview	41
Description	41
Main Input Disconnect / Circuit Breaker	41
3 Contactor Full Feature Bypass with Disconnect / Circuit Breaker	41
3 Contactor Basic Bypass with Disconnect	41
Catalog Number Explanation	42
PowerFlex 400 NEMA/UL Type 1 Enclosure (Position d = A)	43
Factory Installed Options	49
Additional Resources	51

Summary of Changes

This publication contains the following new or updated information. This list includes substantive updates only and is not intended to reflect all changes.

Topic	Page
Updated template	throughout
Removed information for discontinued programming softwares support	throughout
Added Terminators to User Installed Options section	11
Added Spare parts information for Fan kits and Cover	12
Added Catalog No. 1203-USB to communication option kits table	12
Added Line Reactors data	37
Added DC Series Bus Inductors data	38

Product Description

Providing users with easy installation in mechanical fan and pump systems, the Allen-Bradley® PowerFlex® 400 AC drive offers a wide range of built-in features allowing for seamless building system integration. Available in power ratings of 3.0...350 HP @ 480V AC and 3.0...50 HP @ 240V AC, the PowerFlex 400 is designed to meet global OEM, contractor and end-user demands for flexibility, space savings and ease-of-use. The PowerFlex 400 is a cost-effective solution for speed control in variable torque fan and pump applications.

Product Overview

Packaging

- **IP20, NEMA/UL Type 1** - For conventional mounting inside or outside a control cabinet in a 45 °C (113 °F) ambient.
- **Flange Type** - Frame C ratings through 15 kW (20 HP) @ 380...480V AC and 7.5 kW (10 HP) @ 200...240V AC allow for mounting heatsink through back of an enclosure, thus removing a large portion of the heat inside a cabinet. The backside is rated IP66, NEMA/UL Type 4X/12 for both indoor and outdoor use.
- Installation flexibility is enhanced by the UL Plenum rating allowing for direct mounting in an air handling system.

I/O

- Three semi-programmable and four fully programmable digital inputs provide application versatility.
- Two programmable form C relay outputs and one opto output can be used to indicate various drive or motor conditions.
- Two analog outputs are DIP switch selectable for either voltage (0...10V) or current (0...20 mA). These scalable, 10-bit outputs are suitable for metering or as a speed reference for another drive.
- Two analog inputs (one unipolar and one bipolar) are DIP switch selectable for either voltage or current. One input is isolated from the rest of the drive I/O.
- Six programmable form A relay outputs are available via user installed Auxiliary Relay Board (Frames D through H only).

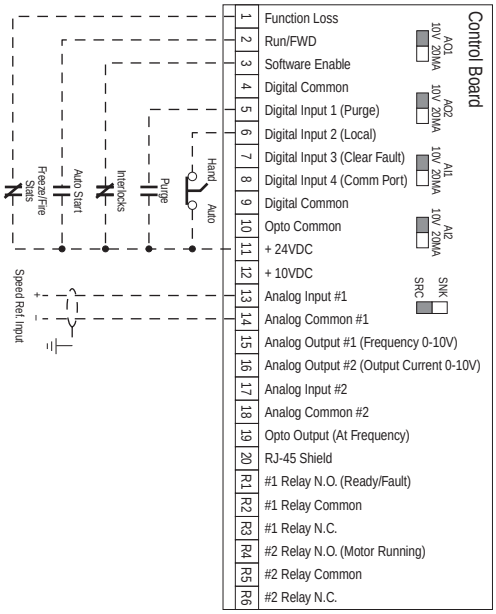

Operator Keypad and Programming

- Integral keypad features 2 line, 16 character LCD display.
- LED indicators provide system configuration and fault status.
- Configurable Hand/Off/Auto function buttons.
- Digital increase/decrease speed control.
- Parameter names are displayed as text.
- Parameters are grouped into files based on function, making programming fast and easy.

Communications

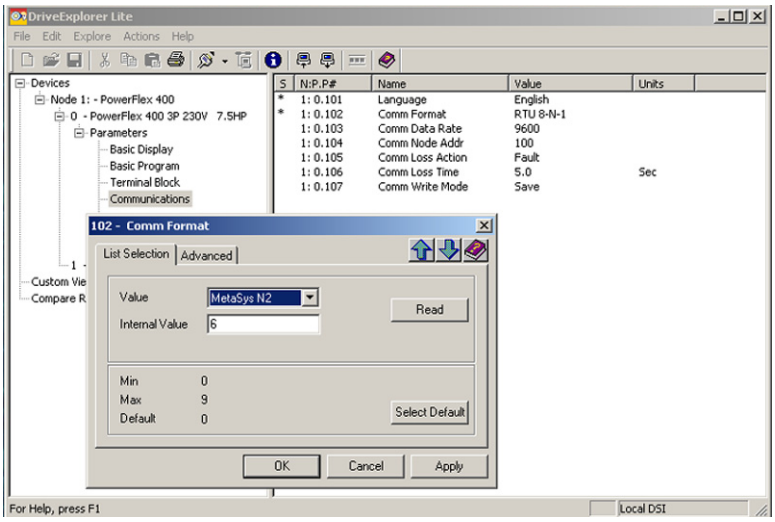

- Supports **Drive Serial Interface** (DSI) communication modules (**DeviceNet**®, **EtherNet/IP**™, **PROFIBUS DP, LonWorks**, **BACnet**) and accessories.
- Embedded **Modbus RTU**, **P1-FLN, and Metasys N2** protocols are parameter selectable and require no additional hardware or software.
- **Integral RS-485 communications** can be used for programming from a PC. It can also be used in a multi-drop network configuration. A serial converter module provides connectivity to any controller with a DF1 port.

PC Programming Software

Connected Components Workbench Software

Connected Components Workbench™ software is a windows-based software packages for programming and configuring Allen-Bradley drives and other Rockwell Automation products. See rok.auto/ccw.
Compatibilty: Windows® XP, Windows Vista and Windows 7

- Online and offline programming capability.
- Operate the drive via an on-screen Control Bar, which is a tool that allows you to start, stop, and change the speed reference of the drive.
- Save, restore, and print parameter information.
- Edit, upload, and download parameters.
- Immediate visual indication of drive and communication status when viewing online drive.

Application Features

Configurable Keypad Hand-Off-Auto Functions

Parameter P042 [Auto Mode] defines the operating configuration of the control keys.

Hand-Off-Auto Configuration

Hand Mode: Start command and speed reference come from the integral keypad. Auto keyswitches control from Hand mode to Auto mode in a bumpless transfer as long as there is an active run command.

Auto Mode: Start command is defined by P036 [Start Source] (keypad, terminal block, comm port) and speed reference is defined by P038 [Speed Reference] (analog inputs, preset frequency, comm port). Start/Hand keyswitches control and speed reference to the integral keypad in a bumpless transfer.

Local/Remote Configuration

Local Mode: Start command and speed reference come from the integral keypad. Auto key stops the drive and the drive switches to Remote mode.

Remote Mode: Start command is defined by P036 [Start Source] and speed reference is defined by P038 [Speed Reference]. Auto key stops the drive and the drive switches to Local mode.

Auto/Manual Configuration

Manual Mode: Start command is defined by P036 [Start Source] and the speed reference comes from the integral keypad. Auto key toggles frequency control to Auto mode in a bumpless transfer.

Auto Mode: Start command is defined by P036 [Start Source] and speed reference is defined by P038 [Speed Reference]. Auto keyswitches frequency control to the integral keypad in a bumpless transfer.

Connectivity to Building Fire and Life Safety Systems

Purge

The PowerFlex 400 drive has an input which can be wired to a fire control panel or other fire/life safety systems allowing control of the drive to be overridden. A purge input starts the drive at a programmable purge speed regardless of the selected start source. Purge can occur and is operational at any time whether the drive is running or stopped. A purge command takes precedence over a stop command from the comm port/network and over a “SW Enable” command from the terminal block.

Fire/Freeze Status

The PowerFlex 400 drive can be tied into fire alarm systems or interlocked with cooling coils via a "Function Loss" input on the drive. Upon opening of the input, the drive will immediately coast to a stop if running and issue a fault. The drive will only be allowed to restart once the alarm state is cleared and the drive fault is reset.

Proportional, Integral, Differential Control Loop

The PowerFlex 400 has a built-in PID (Proportional, Integral, Differential) control loop. The PID loop is used to maintain a process variable, such as pressure or flow, at a desired set point. The PID loop works by subtracting the PID feedback from a reference and generating an error value. The PID loop reacts to the error, based on the PID gains, and outputs a frequency to try to reduce the error value to zero.

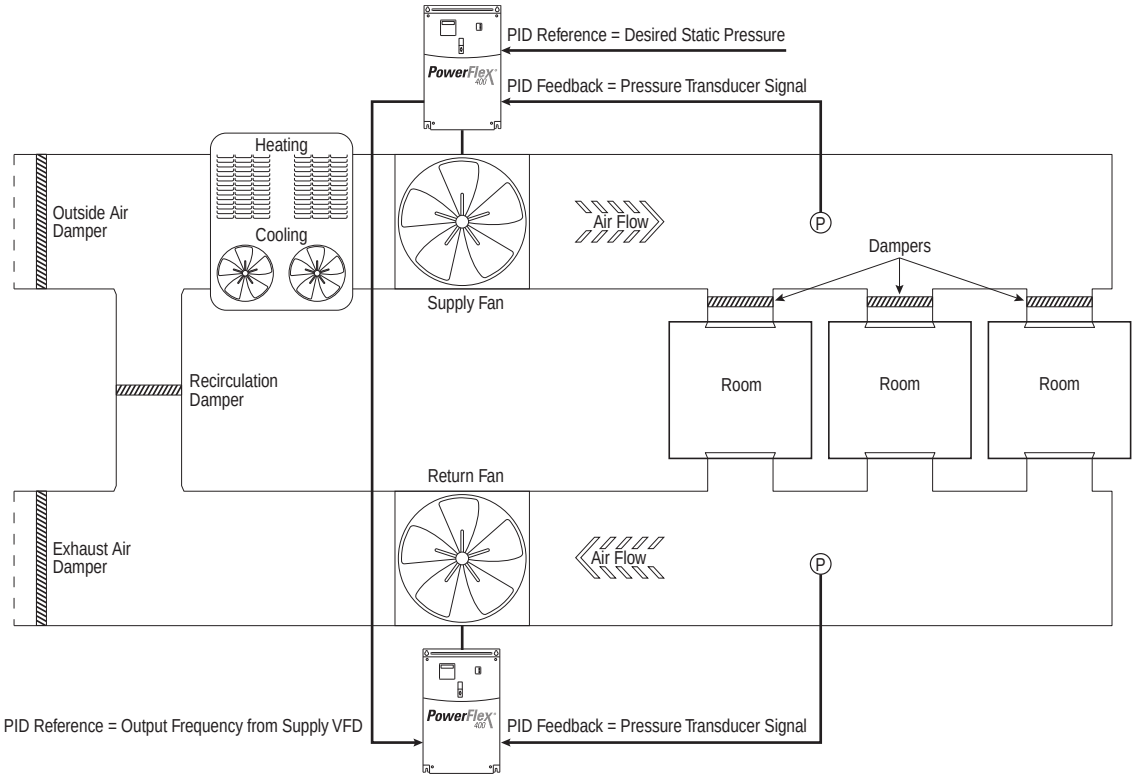

Damper Control

The PowerFlex 400 allows damper control logic to be imbedded within the drive reducing cost that is associated with external control hardware and software. A system Run command can be wired directly into one of the drive inputs. Relay outputs can be used to energize the damper to either open or close. A damper limit switch can be wired back to the drive providing indication that the damper is in the proper position and that it is safe for the drive to run at commanded speed.

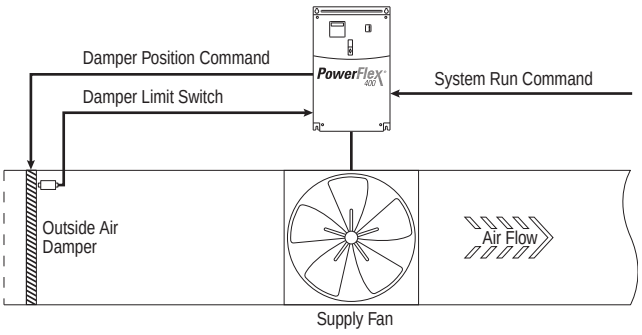

Product Selection Guide

Auxiliary Motor Control

The PowerFlex 400 has a built-in Auxiliary Motor Control feature. This feature allows operation of up to three line-started motors and the motor controlled directly by the PowerFlex 400 drive. System output can vary from 0% (auxiliary motors off and drive-controlled motor at zero speed) to 400% (3 auxiliary motors and drive-controlled motor at full speed). When Auxiliary Motor Control is enabled, the internal PID controller in the PowerFlex 400 uses a reference and feedback signal to adjust the speed of the drive-controlled motor such that the feedback signal follows the reference signal. When demand exceeds the first motors capacity, the PowerFlex 400 Auxiliary Motor Control automatically starts an auxiliary motor. The speed of the drive-controlled motor is reduced to account for the auxiliary motors additional output to the system. If demand continues to increase, the PowerFlex Auxiliary Motor Control starts additional motors using the same process. When demand decreases, an auxiliary motor is stopped and the PowerFlex Auxiliary Motor Control increases the speed of the drive-controlled motor to account for lost system output. A Motor Interlock input identifies motors that are out of service and causes them to skip over to the next available motor.

An Auto Swap function also can be used which allows equal wear to be placed on each motor by periodically swapping the drive controlled and auxiliary motors. Each motor in the system will over time be connected to the PowerFlex 400 drive and also directly to the AC line. During an Auto Swap, the motor that is directly connected to the PowerFlex 400 drive is stopped and the contactor is opened. The contactor of the next motor that will be controlled by the PowerFlex 400 drive is opened if running across the AC line. A contactor is closed connecting this motor directly to the PowerFlex 400 drive and is started. An additional motor is line started if necessary.

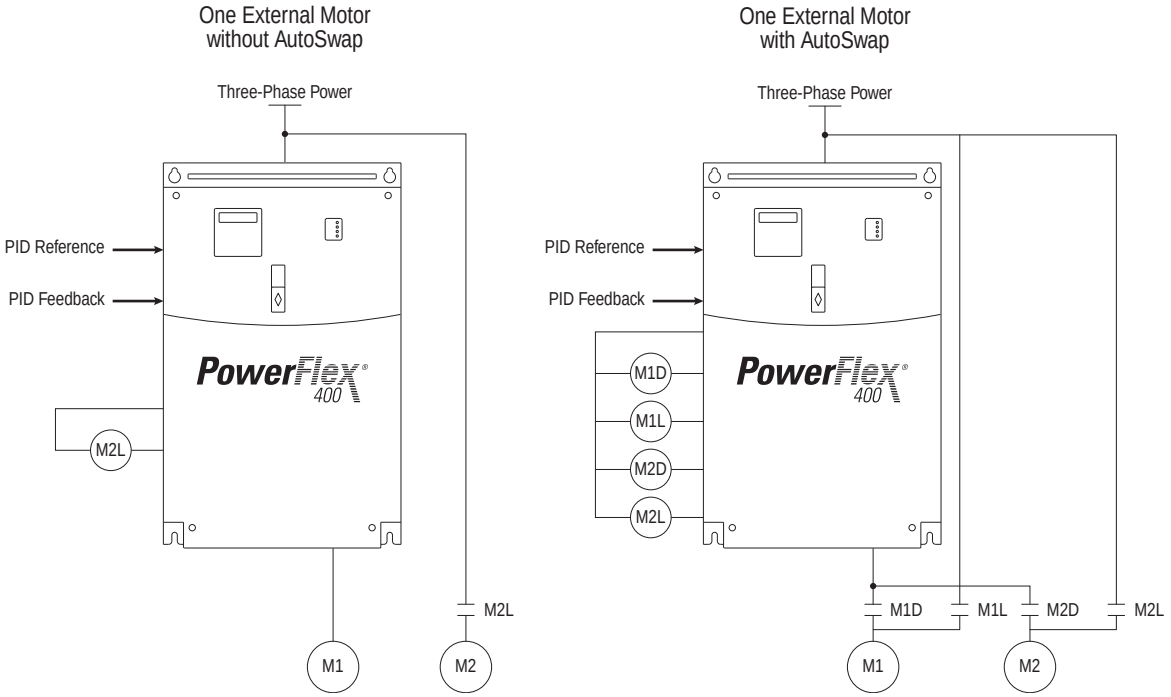

Catalog Number Explanation

Position Number

1-3	4	5	6-8	9	10	11	12
22C	–	D	038	A	1	0	3
a		b	c	d	e	f	g

a

Drive	
Code	Type
22C	PowerFlex 400

b

Voltage Rating		
Code	Voltage	Ph.
B	240V AC	3
D	480V AC	3

c1

Rating			
200…240V Input			
Code	Amps	kW (Hp)	Frame
012	12	2.2 (3.0)	C
017	17.5	3.7 (5.0)	C
024	24	5.5 (7.5)	C
033	33	7.5 (10)	C
049	49	11 (15)	D
065	65	15 (20)	D
075	75	18.5 (25)	D
090	90	22 (30)	D
120	120	30 (40)	E
145	145	37 (50)	E

c2

Rating			
380…480V Input			
Code	Amps	kW (Hp)	Frame
6P0	6.0	2.2 (3.0)	C
010	10.5	4.0 (5.0)	C
012	12	5.5 (7.5)	C
017	17	7.5 (10)	C
022	22	11 (15)	C
030	30	15 (20)	C
038	38	18.5 (25)	D
045	45.5	22 (30)	D
060	60	30 (40)	D
072	72	37 (50)	E
088	88	45 (60)	E
105	105	55 (75)	E
142	142	75 (100)	E
170	170	90 (125)	F
208	208	110 (150)	F
260	260	132 (200)	G
310	310	160 (250)	G
370	370	200 (300)	H
460	460	250 (350)	H

d

Enclosure	
Code	Enclosure
N	Panel Mount - IP20, NEMA/UL Type Open[1]
A	Panel Mount - IP30, NEMA/UL Type 1[2]
F	Flange Mount - IP20, NEMA/UL Type Open[3]

[1] Frame C drives only available with IP20, NEMA/UL Type Open enclosure. Field installed conversion kit available to achieve IP30, NEMA/UL Type 1 rating.

[2] Frame D, E and F drives only available with IP30, NEMA/UL Type 1 enclosure.

[3] Frame C drives only.

e

HIM	
Code	Interface Module
1	Fixed Keypad

f

Emission Class	
Code	Rating
0	Not Filtered

g

Version	
Code	Version
3	RS485

PowerFlex 400 Standard Drives

200...240V AC, Three Phase Drives

Drive Ratings				Rating	Catalog No.	
kW	HP	Output Current[1]	Frame Size		Panel Mount	Flange Mount
2.2	3.0	12 A	C	IP20, NEMA/UL Open Type[2]	22C-B012N103	22C-B012F103
3.7	5.0	17.5 A	C	IP20, NEMA/UL Open Type[2]	22C-B017N103	22C-B017F103
5.5	7.5	24 A	C	IP20, NEMA/UL Open Type[2]	22C-B024N103	22C-B024F103
7.5	10	33 A	C	IP20, NEMA/UL Open Type[2]	22C-B033N103	22C-B033F103
11	15	49 A	D	IP30, NEMA/UL Type 1	22C-B049A103	–
15	20	65 A	D	IP30, NEMA/UL Type 1	22C-B065A103	–
18.5	25	75 A	D	IP30, NEMA/UL Type 1	22C-B075A103	–

200...240V AC, Three Phase Drives (Continued)

Drive Ratings				Rating	Catalog No.	
kW	HP	Output Current(1)	Frame Size		Panel Mount	Flange Mount
22	30	90 A	D	IP30, NEMA/UL Type 1	22C-B090A103	–
30	40	120 A	E	IP30, NEMA/UL Type 1	22C-B120A103	–
37	50	145 A	E	IP30, NEMA/UL Type 1	22C-B145A103	–

(1) Drive terminals are sized according to UL. Depending on operating ambient and wire used, some local or national codes may require a larger wire size than what the power terminals can accept. Multiple conductors, 90°C wire, and/or lugs may be required. See the PowerFlex 400 user manual, publication 22C-UM001 for details on terminal block wire ranges.
(2) IP30, NEMA/UL Type 1 can be achieved for panel mount drives with top cover and optional conduit box kit installed. Field installed conversion kit specified under User Installed Options on page 11

380...480V AC, Three Phase Drives

Drive Ratings				Rating	Catalog No.	
kW	HP	Output Current(1)	Frame Size		Panel Mount	Flange Mount
2.2	3.0	6.0 A	C	IP20, NEMA/UL Open Type(2)	22C-D6P0N103	22C-D6P0F103
4.0	5.0	10.5 A	C	IP20, NEMA/UL Open Type(2)	22C-D010N103	22C-D010F103
5.5	7.5	12 A	C	IP20, NEMA/UL Open Type(2)	22C-D012N103	22C-D012F103
7.5	10	17 A	C	IP20, NEMA/UL Open Type(2)	22C-D017N103	22C-D017F103
11	15	22 A	C	IP20, NEMA/UL Open Type(2)	22C-D022N103	22C-D022F103(3)
15	20	30 A	C	IP20, NEMA/UL Open Type(2)	22C-D030N103	22C-D030F103(3)
18.5	25	38 A	D	IP30, NEMA/UL Type 1	22C-D038A103	–
22	30	45.5 A	D	IP30, NEMA/UL Type 1	22C-D045A103	–
30	40	60 A	D	IP30, NEMA/UL Type 1	22C-D060A103	–
37	50	72 A	E	IP30, NEMA/UL Type 1	22C-D072A103	–
45	60	88 A	E	IP30, NEMA/UL Type 1	22C-D088A103	–
55	75	105 A	E	IP30, NEMA/UL Type 1	22C-D105A103	–
75	100	142 A	E	IP30, NEMA/UL Type 1	22C-D142A103	–
90	125	170 A	F	IP30, NEMA/UL Type 1	22C-D170A103	–
110	150	208 A	F	IP30, NEMA/UL Type 1	22C-D208A103	–
132	200	260 A	G	IP30, NEMA/UL Type 1	22C-D260A103	–
160	250	310 A	G	IP30, NEMA/UL Type 1	22C-D310A103	–
200	300	370 A	H	IP30, NEMA/UL Type 1	22C-D370A103	–
250	350	460 A	H	IP30, NEMA/UL Type 1	22C-D460A103	–

(1) Drive terminals are sized according to UL. Depending on operating ambient and wire used, some local or national codes may require a larger wire size than what the power terminals can accept. Multiple conductors, 90°C wire, and/or lugs may be required. See the PowerFlex 400 User Manual, publication 22C-UM001 for details on terminal block wire ranges.
(2) IP30, NEMA/UL Type 1 can be achieved for panel mount drives with top cover and optional conduit box kit installed. Field installed conversion kit specified under User Installed Options on page 11.
(3) 11 and 15 kW (15 and 20 HP) Frame C flange mount drives require external DC series bus inductor.

User Installed Options

IP30, NEMA/UL Type 1 Conversion Kit

Description	Drive Frame	Catalog No.
IP30, NEMA/UL Type 1 Kit *Description:* Field installed kit. Converts drive to IP30, NEMA/UL Type 1 enclosure. Includes conduit box with mounting screws and plastic top panel.	C	22-JBAC
IP30, NEMA/UL Type 1 Kit with Communication Option *Description:* Field installed kit. Converts drive to IP30, NEMA/UL Type 1 enclosure. Includes communication option conduit box with mounting screws and plastic top panel.	C	22-JBCC

Human Interface Module Option Kits and Accessories

Description	Catalog No.
Remote Human Interface Module (HIM) – Panel Mount *Description:* LCD Display, Remote Panel Mount, Digital Speed Control, Copycat capable, IP66, NEMA/UL Type 4X/12) indoor use only, Includes 2.0 meter cable. *Note:* Remote HIM display and keypad are different than PowerFlex 400 integral keypad. See the PowerFlex 400 user manual, publication 22C-UM001 for details.	22-HIM-C2S
Remote Human Interface Module (HIM) – Handheld *Description:* LCD Display, Remote Handheld, Digital Speed Control, Full Numeric Keypad, Copycat capable, IP30, NEMA/UL Type 1), Includes 1.0 m cable, Panel Mount with optional Bezel Kit. *Note:* Remote HIM display and keypad are different than PowerFlex 400 integral keypad. See the PowerFlex 400 user manual, publication 22C-UM001 for details.	22-HIM-A3
Bezel Kit *Description:* Panel Mount for LCD Display, Remote Handheld unit, IP30, NEMA/UL Type 1).	22-HIM-B1
DSI HIM Cable *Description:* DSI HIM to RJ45 cable. 1.0 m (3.3 ft) 2.9 m (9.51 ft)	 22-HIM-H10 22-HIM-H30

PC Programming Software

Item	Description	
Connected Components Workbench Software (Download via the Software Subscription Portal or DVD-ROM) rok.auto/ccw	Windows-based software packages for programming and configuring Allen-Bradley drives and other Rockwell Automation products. Compatibility: Windows XP, Windows Vista, and Windows 7.	See rok.auto/ccw for more information.

Terminators

Description[1]	Catalog No.
For use with 3.7 kW (5 HP) and below drives	1204-TFA1
For use with 1.5 kW (2 HP) and above drives	1204-TFB2

(1) For selection information, see Appendix A of the Wiring and Grounding Guidelines for Pulse Width Modulated (PWM) AC Drives, publication DRIVES-IN001.

Spare Parts

Item	Description	Catalog No.
Fan Replacement Kits	Fan Replacement Kit - Frame C, 1 Fan	SK-U1-FAN1-C1[(1)]
	Fan Replacement Kit - Frame C, 1 Fan, 15 HP	SK-U1-FAN1-C2[(2)]
	Fan Replacement Kit - Frame D, 2 Fans, B049...B090 & D038...D060 Ratings	SK-U1-FAN2-D1
	Fan Replacement Kit - Frame E, 2 Fans, B120...B145 & D072...D142 Ratings	SK-U1-FAN2-E2
	Fan Replacement Kit - Frame F, 2 Fans, IGBT, D170 & D208 Ratings	SK-U1-FAN2-F1
	Fan Replacement Kit - Frame F, 1 Fan, Rectifier, D170 & D208 Ratings	SK-U1-FAN1-F2
	Fan Replacement Kit - Frame F, 1 Fan, Choke, D170 & D208 Ratings	SK-U1-FAN1-F3
	Fan Replacement Kit - Frame G, 1 Fan (Side), D260 & D310 Ratings	SK-U1-FAN1-G1
	Fan Replacement Kit - Frame G, 4 Fans (Bottom), D260 & D310 Ratings	SK-U1-FAN4-G3
	Fan Replacement Kit - Frame H, 1 Fan (Upper Side), D370 & D460 Ratings	SK-U1-FAN1-H1
	Fan Replacement Kit - Frame H, 1 Fan (Middle Side), D370 & D460 Ratings	SK-U1-FAN1-H2
	Fan Replacement Kit - Frame H, 4 Fans (Bottom), D370 & D460 Ratings	SK-U1-FAN4-H3
Covers	Frame C Cover with Power Terminal Guard	SK-U1-CCVR1-C1
	Frame D Cover	SK-U1-CCVR1-D1
	Frame E Cover	SK-U1-CCVR1-E1
	Frame F Cover	SK-U1-CCVR1-F1
	Frame G Cover	SK-U1-CCVR1-G1
	Frame H Cover	SK-U1-CCVR1-H1

(1) 3...10 HP at 200...240V AC and 3...10 HP at 380...480V AC.
(2) 15...20 HP at 380...480V AC.

Other Options

Description	Catalog No.
Auxiliary Relay Board *Description:* Field installed kit. Expands drive output capabilities.	AK-U9-RLB1

Communication Option Kits

Description	Catalog No.
Universal Serial Bus (USB) Converter includes 2m USB, 20-HIM-H10 and 22-HIM-H10 Cables.	1203-USB
DSI Cable *Description:* 2.0 meter RJ45 to RJ45 cable, male to male connectors.	22-RJ45CBL-C20
Splitter Cable *Description:* RJ45 one to two port splitter cable.	AK-U0-RJ45-SC1
Terminating Resistors *Description:* RJ45 120 Ohm resistors (2 pieces)	AK-U0-RJ45-TR1
Terminal Block *Description:* RJ45 two position terminal block (5 pieces)	AK-U0-RJ45-TB2P
BACnet MS/TP RS-485 Communication Adapter *Note:* Requires a Communication Adapter Cover when used with Frame C PowerFlex 400 drives (Ordered Separately).	22-COMM-B
ControlNet™ Communication Adapter *Note:* Requires a Communication Adapter Cover when used with Frame C PowerFlex 400 drives (Ordered Separately).	22-COMM-C
DeviceNet Communication Adapter *Note:* Requires a Communication Adapter Cover when used with Frame C PowerFlex 400 drives (Ordered Separately).	22-COMM-D
EtherNet/IP Communication Adapter *Note:* Requires a Communication Adapter Cover when used with Frame C PowerFlex 400 drives (Ordered Separately).	22-COMM-E
LonWorks Communication Adapter *Note:* Requires a Communication Adapter Cover when used with Frame C PowerFlex 400 drives (Ordered Separately).	22-COMM-L
PROFIBUS DP Communication Adapter *Note:* Requires a Communication Adapter Cover when used with Frame C PowerFlex 400 drives (Ordered Separately).	22-COMM-P
External DSI Communications Kit *Description:* External mounting kit for 22-COMM communication options	22-XCOMM-DC-BASE

Communication Option Kits (Continued)

Description	Catalog No.
External Comms Power Supply *Description:* Optional 100...240V AC Power Supply for External DSI Communications Kit	20-XCOMM-AC-PS1
Communication Adapter Cover *Description:* Houses the Communication Adapter for Frame C drives. *Note:* This cover adds 25 mm (0.98 in.) to the overall depth of the drive and is only required for Frame C PowerFlex 400 drives.	22C-CCC[1]
Serial Flash Firmware Kit *Description:* Use a PC to update drive firmware.	AK-U9-FLSH1

(1) If IP30, NEMA/UL Type 1 is required, must also order 22-JBCC (Frame C drives only).

Installation Considerations

Input and Output Line Reactors (Loose)

208V, 60 Hz, Three-Phase

PowerFlex 400 Ratings			Catalog No.	
kW	**HP**	**Amps**	**IP00 (NEMA/UL Type Open)**	**IP11 (NEMA/UL Type 1)**
3% Impedance				
2.2	3.0	12	1321-3R12-A	1321-3RA12-A
3.7	5.0	18	1321-3R18-A	1321-3RA18-A
5.5	7.5	25	1321-3R25-A	1321-3RA25-A
7.5	10	35	1321-3R35-A	1321-3RA35-A
11	15	45	1321-3R45-A	1321-3RA45-A
15	20	55	1321-3R55-A	1321-3RA55-A
18.5	25	80	1321-3R80-A	1321-3RA80-A
22	30	80	1321-3R80-A	1321-3RA80-A
30	40	100	1321-3R100-A	1321-3RA100-A
37	50	130	1321-3R130-A	1321-3RA130-A
5% Impedance				
2.2	3.0	12	1321-3R12-B	1321-3RA12-B
3.7	5.0	18	1321-3R18-B	1321-3RA18-B
5.5	7.5	25	1321-3R25-B	1321-3RA25-B
7.5	10	35	1321-3R35-B	1321-3RA35-B
11	15	45	1321-3R45-B	1321-3RA45-B
15	20	55	1321-3R55-B	1321-3RA55-B
18.5	25	80	1321-3R80-B	1321-3RA80-B
22	30	80	1321-3R80-B	1321-3RA80-B
30	40	100	1321-3R100-B	1321-3RA100-B
37	50	130	1321-3R130-B	1321-3RA130-B

240V, 60 Hz, Three-Phase

PowerFlex 400 Ratings			Catalog No.	
kW	**HP**	**Amps**	**IP00 (NEMA/UL Type Open)**	**IP11 (NEMA/UL Type 1)**
3% Impedance				
2.2	3.0	12	1321-3R12-A	1321-3RA12-A
3.7	5.0	18	1321-3R18-A	1321-3RA18-A
5.5	7.5	25	1321-3R25-A	1321-3RA25-A
7.5	10	35	1321-3R35-A	1321-3RA35-A
11	15	45	1321-3R45-A	1321-3RA45-A
15	20	55	1321-3R55-A	1321-3RA55-A
18.5	25	80	1321-3R80-A	1321-3RA80-A
22	30	80	1321-3R80-A	1321-3RA80-A
30	40	100	1321-3R100-A	1321-3RA100-A
37	50	130	1321-3R130-A	1321-3RA130-A
5% Impedance				
2.2	3.0	12	1321-3R12-B	1321-3RA12-B
3.7	5.0	18	1321-3R18-B	1321-3RA18-B
5.5	7.5	25	1321-3R25-B	1321-3RA25-B
7.5	10	35	1321-3R35-B	1321-3RA35-B
11	15	45	1321-3R45-B	1321-3RA45-B
15	20	55	1321-3R55-B	1321-3RA55-B

240V, 60 Hz, Three-Phase (Continued)

PowerFlex 400 Ratings			Catalog No.	
kW	**HP**	**Amps**	**IP00 (NEMA/UL Type Open)**	**IP11 (NEMA/UL Type 1)**
18.5	25	80	1321-3R80-B	1321-3RA80-B
22	30	80	1321-3R80-B	1321-3RA80-B
30	40	100	1321-3R100-B	1321-3RA100-B
37	50	130	1321-3R130-B	1321-3RA130-B

480V, 60 Hz, Three-Phase

PowerFlex 400 Ratings			Catalog No.	
kW	**HP**	**Amps**	**IP00 (NEMA/UL Type Open)**	**IP11 (NEMA/UL Type 1)**
3% Impedance				
2.2	3.0	8.0	1321-3R8-C	1321-3RA8-C
4.0	5.0	12	1321-3R12-B	1321-3RA12-B
5.5	7.5	12	1321-3R12-B	1321-3RA12-B
7.5	10	18	1321-3R18-B	1321-3RA18-B
11	15	25	1321-3R25-B	1321-3RA25-B
15	20	35	1321-3R35-B	1321-3RA35-B
18.5	25	35	1321-3R35-B	1321-3RA35-B
22	30	45	1321-3R45-B	1321-3RA45-B
30	40	55	1321-3R55-B	1321-3RA55-B
37	50	80	1321-3R80-B	1321-3RA80-B
45	60	80	1321-3R80-B	1321-3RA80-B
55	75	100	1321-3R100-B	1321-3RA100-B
75	100	130	1321-3R130-B	1321-3RA130-B
90	125	160	1321-3R160-B	1321-3RA160-B
110	150	200	1321-3R200-B	1321-3RA200-B
132	200	250	1321-3RB250-B	1321-3RAB250-B
160	250	320	1321-3RB320-B	1321-3RAB320-B
200	300	400	1321-3RB400-B	1321-3RAB400-B
250	350	500	1321-3R500-B	1321-3RA500-B
5% Impedance				
2.2	3.0	8.0	1321-3R8-D	1321-3RA8-D
4.0	5.0	12	1321-3R12-C	1321-3RA12-B
5.5	7.5	12	1321-3R12-C	1321-3RA12-C
7.5	10	18	1321-3R18-C	1321-3RA18-C
11	15	25	1321-3R25-C	1321-3RA25-C
15	20	35	1321-3R35-C	1321-3RA35-C
18.5	25	35	1321-3R35-C	1321-3RA35-C
22	30	45	1321-3R45-C	1321-3RA45-C
30	40	55	1321-3R55-C	1321-3RA55-C
37	50	80	1321-3R80-C	1321-3RA80-C
45	60	80	1321-3R80-C	1321-3RA80-C
55	75	100	1321-3R100-C	1321-3RA100-C
75	100	130	1321-3R130-C	1321-3RA130-C
90	125	160	1321-3R160-C	1321-3RA160-C
110	150	200	1321-3R200-C	1321-3RA200-C
132	200	250	1321-3RB250-C	1321-3RAB250-C
160	250	320	1321-3RB320-C	1321-3RAB320-C
200	300	400	1321-3RB400-C	1321-3RAB400-C
250	350	500	1321-3R500-C	1321-3RA500-C

DC Series Bus Inductors (Loose)

200...240V, 60 Hz, Three-Phase

PowerFlex 400 Ratings			Inductance (mH)	Catalog No.
kW	HP	Amps		IP00 (NEMA/UL Type Open)
2.2	3.0	12	0.92	1321-DC12-1
3.7	5.0	17.5	0.63	1321-DC18-1
5.5	7.5	24	0.85	1321-DC32-1
7.5	10	33	0.75	1321-DC40-1

380...480V, 60 Hz, Three-Phase

PowerFlex 400 Ratings			Inductance (mH)	Catalog No.
kW	HP	Amps		IP00 (NEMA/UL Type Open)
2.2	3.0	6.0	3.68	1321-DC9-2
4.0	5.0	10.5	2.1	1321-DC12-2
5.5	7.5	12	3.75	1321-DC18-4
7.5	10	17	1.75	1321-DC25-4
11	15	22	2.68	1321-DC32-2
15	20	30	2.00	1321-DC40-4

EMC Filters (Loose)

200...240V, 50/60 Hz, Three-Phase

PowerFlex 400 Ratings			Catalog No.
kW	HP	Amps	
2.2	3.0	12	22-RF034-CS
3.7	5.0	17.5	22-RF034-CS
5.5	7.5	24	22-RF034-CS
7.5	10	33	22-RF034-CS
11	15	49	22-RFD070
15	20	65	22-RFD100
18.5	25	75	22-RFD100
22	30	90	22-RFD150
30	40	120	22-RFD150
37	50	145	22-RFD180

380...480V, 50/60 Hz, Three-Phase

PowerFlex 400 Ratings			Catalog No.
kW	HP	Amps	
2.2	3.0	6.0	22-RF018-CS
4.0	5.0	10.5	22-RF018-CS
5.5	7.5	12	22-RF018-CS
7.5	10	17	22-RF018-CS
11	15	22	22-RF026-CS
15	20	30	22-RFD036
18.5	25	38	22-RFD050
22	30	45.5	22-RFD050
30	40	60	22-RFD070
37	50	72	22-RFD100
45	60	88	22-RFD100
55	75	105	22-RFD150

380...480V, 50/60 Hz, Three-Phase (Continued)

PowerFlex 400 Ratings			Catalog No.
kW	HP	Amps	
75	100	142	22-RFD180
90	125	170	22-RFD208
110	150	208	22-RFD208
132	200	260	22-RFD323
160	250	310	22-RFD480
200	300	370	22-RFD480
250	350	460	22-RFD480

Isolation Transformers (Loose)

208V AC, 3 Phase, 60 Hz Secondary

PowerFlex 400 Ratings			IP32 (NEMA/UL Type 3R) Isolation Transformer	
kW	HP	Amps	kVA	Catalog No.
				208 Volts Primary
2.2	3.0	12	5.0	1321-3TW005-XX
4.0	5.0	17.5	7.5	1321-3TW007-XX
5.5	7.5	24	11	1321-3TW011-XX
7.5	10	33	14	1321-3TW014-XX
11	15	49	20	1321-3TW020-XX
15	20	65	27	1321-3TW027-XX
18.5	25	75	34	1321-3TW034-XX

230V AC, 3 Phase, 60 Hz Secondary

PowerFlex 400 Ratings			IP32 (NEMA/UL Type 3R) Isolation Transformer			
kW	HP	Amps	kVA	Catalog No.		
				230 Volts Primary	460 Volts Primary	575 Volts Primary
2.2	3.0	12	5.0	1321-3TW005-AA	1321-3TW005-BA	1321-3TW005-CA
3.7	5.0	17.5	7.5	1321-3TW007-AA	1321-3TW007-BA	1321-3TW007-CA
5.5	7.5	24	11	1321-3TW011-AA	1321-3TW011-BA	1321-3TW011-CA
7.5	10	33	14	1321-3TW014-AA	1321-3TW014-BA	1321-3TW014-CA
11	15	49	20	1321-3TW020-AA	1321-3TW020-BA	1321-3TW020-CA
15	20	65	27	1321-3TW027-AA	1321-3TW027-BA	1321-3TW027-CA
18.5	25	75	34	1321-3TW034-AA	1321-3TW034-BA	1321-3TW034-CA
22	30	90	40	1321-3TW040-AA	1321-3TW040-BA	1321-3TW040-CA
30	40	120	51	1321-3TW051-AA	1321-3TW051-BA	1321-3TW051-CA
37	50	145	63	1321-3TH063-AA	1321-3TH063-BA	–

460V AC, 3 Phase, 60 Hz Secondary

PowerFlex 400 Drive Ratings			IP32 (NEMA/UL Type 3R) Isolation Transformer			
kW	HP	Amps	kVA	Catalog No.		
				230 Volts Primary	460 Volts Primary	575 Volts Primary
2.2	3.0	6.0	5.0	1321-3TW005-AB	1321-3TW005-BB	1321-3TW005-CB
4.0	5.0	8.7	7.5	1321-3TW007-AB	1321-3TW007-BB	1321-3TW007-CB
5.5	7.5	12	11	1321-3TW011-AB	1321-3TW011-BB	1321-3TW011-CB
7.5	10	17	14	1321-3TW014-AB	1321-3TW014-BB	1321-3TW014-CB
11	15	22	20	1321-3TW020-AB	1321-3TW020-BB	1321-3TW020-CB
15	20	30	27	1321-3TW027-AB	1321-3TW027-BB	1321-3TW027-CB
18.5	25	38	34	1321-3TW034-AB	1321-3TW034-BB	1321-3TW034-CB

460V AC, 3 Phase, 60 Hz Secondary (Continued)

PowerFlex 400 Drive Ratings			IP32 (NEMA/UL Type 3R) Isolation Transformer			
kW	HP	Amps	kVA	Catalog No.		
				230 Volts Primary	460 Volts Primary	575 Volts Primary
22	30	45.5	40	1321-3TW040-AB	1321-3TW040-BB	1321-3TW040-CB
30	40	60	51	1321-3TW051-AB	1321-3TW051-BB	1321-3TW051-CB
37	50	72	63	1321-3TH063-AB	1321-3TH063-BB	–
45	60	88	75	1321-3TH075-AB	1321-3TH075-BB	–
55	75	105	93	1321-3TH093-AB	1321-3TH093-BB	–
75	100	142	118	1321-3TH118-AB	1321-3TH118-BB	–
90	125	170	145	1321-3TH145-AB	1321-3TH145-BB	–
110	150	208	175	1321-3TH175-AB	1321-3TH175-BB	–
132	200	260	200	1321-3TH220-AB	1321-3TH220-BB	–
160	250	310	245	1321-3TH275-AB	1321-3TH275-BB	–
200	300	370	305	1321-3TH330-AB	1321-3TH330-BB	–
250	350	460	390	1321-3TH440-AB	1321-3TH440-BB	–

Power Wiring

PowerFlex 400 drives have the following built-in protective features to help simplify installation.

- Ground fault protection while starting and running ensures reliable operation
- Electronic motor overload protection increases motor life
- 6 kV transient protection provides increased robustness for 380...480V system voltages

There are many other factors that must be considered for optimal performance in any given application. The block diagram below highlights the primary installation considerations. See the PowerFlex 400 user manual, publication 22C-UM001, for detailed recommendations on input power conditioning, CE conformance (EMC filtering), FCC Compliance, reflected wave protection, motor cable types and motor cable distances.

Block Diagram

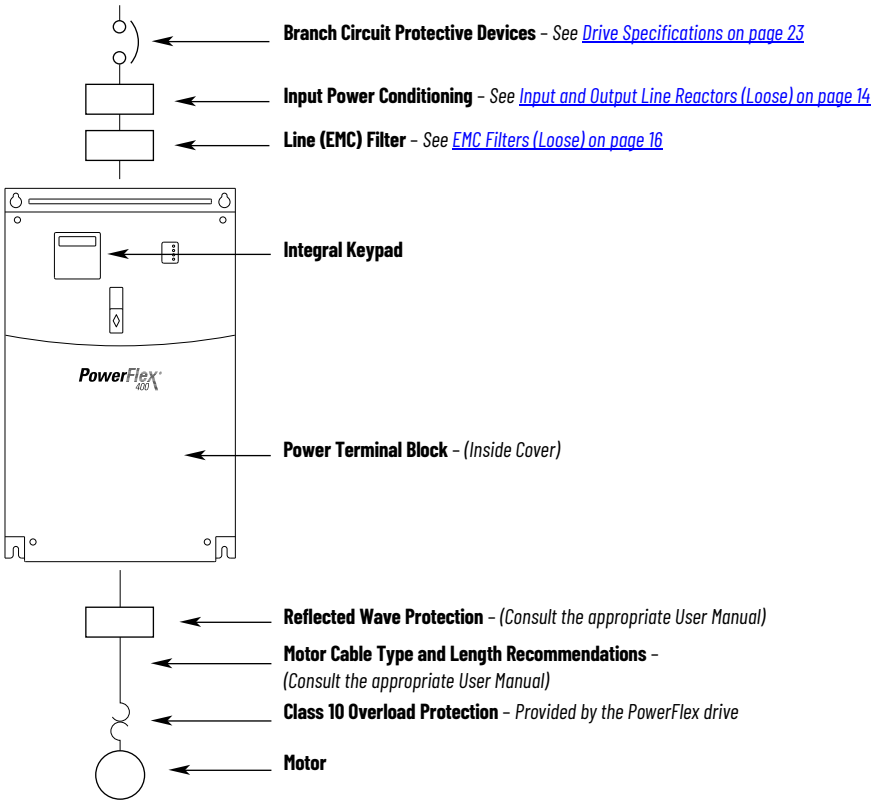

Power Terminal Block

Terminal Block Specifications

Name	Frame	Description	Wire Size Range[1]		Recommended Torque
			Maximum	Minimum	
Power Terminal Block	C	All power terminals	8.4 mm^2 (8 AWG)	1.3 mm^2 (16 AWG)	3.7 N•m (33 lb•in)
	D	All power terminals	33.6 mm^2 (2 AWG)	8.4 mm^2 (8 AWG)	5.1 N•m (45 lb•in)
	E 480V 37...45 kW (50...60 HP)	All power terminals	33.6 mm^2 (2 AWG)	3.5 mm^2 (12 AWG)	5.6 N•m (49.5 lb•in)
	E 240V 30...37 kW (40...50 HP) 480V 55...75 kW (75...100 HP)	All power terminals	107.2 mm^2 (4/0 AWG)	53.5 mm^2 (1/0 AWG)	19.5 N•m (173 lb•in)
	F	All power terminals	152.5 mm^2 (300 MCM)	85.0 mm^2 (3/0 AWG)	19.5 N•m (173 lb•in)
	G	All power terminals	152.5 mm^2 (300 MCM)	85.0 mm^2 (3/0 AWG)	29.4 N•m (260 lb•in)
	H	All power terminals	253.0 mm^2 (500 MCM)	127.0 mm^2 (250 MCM)	40.0 N•m (354 lb•in)
I/O Terminal Block	All	Signal and control connections	1.3 mm^2 (16 AWG)	0.13 mm^2 (26 AWG)	0.5...0.8 N•m (4.4...7 lb•in)

(1) Maximum/minimum sizes that the terminal block will accept - these are not recommendations. If national or local codes require sizes outside this range, lugs may be used.

Terminal [1]	Description			
R/L1, S/L2, T/L3	3-Phase Input			
U/T1	To Motor U/T1			
V/T2	To Motor V/T2	=	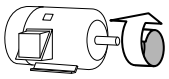	Switch any two motor leads to change forward direction.
W/T3	To Motor W/T3			
P2, P1	DC Bus Inductor Connection Drives are shipped with a jumper between Terminals P2 and P1. Remove this jumper only when a DC Bus Inductor will be connected. Drive will not power up without a jumper or inductor connected.			
DC–, DC+	DC Bus Connection (Frame C and H Drives)			
P2, DC–	DC Bus Connection (Frame D, E, F, and G Drives)			
BR+, BR–	Not Used			
⏚	Safety Ground - PE			

(1) **Important:** Terminal screws may become loose during shipment. Ensure that all terminal screws are tightened to the recommended torque before applying power to the drive.

Frame C

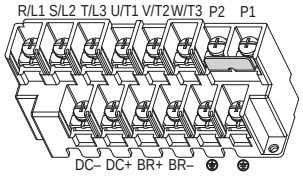

Frame D

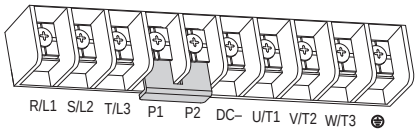

Frame E: 480V, 37-45kW (50-60HP)

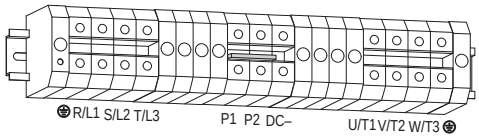

Frame E: 240V, 30-37kW (40-50HP)
480V, 55-75kW (75-100HP)

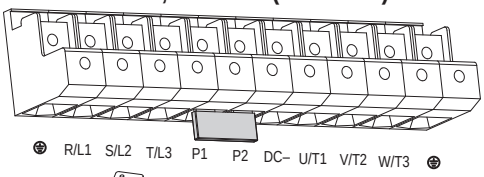

Frame F

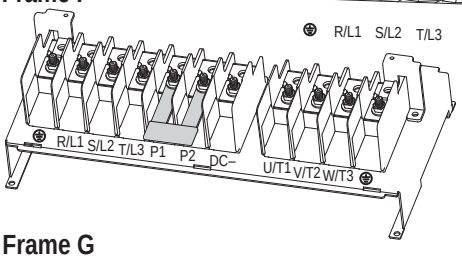

Frame G

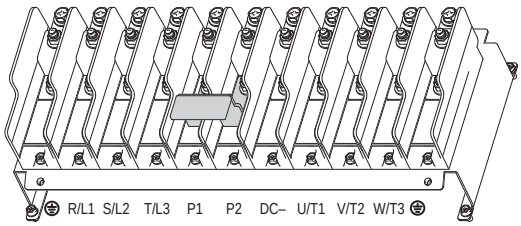

Frame H

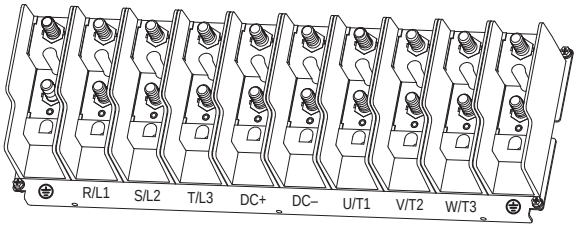

Control Wiring

- The control logic is 24V DC and can be set for either Sink or Source control with a DIP switch setting.
- Control terminal screws are sized for a conventional blade screwdriver.
- I/O Terminals 1, 2 and 3 are semi-programmable and dedicated for Stop, Start, Reverse, and SW Enable inputs. These I/O Terminals can be programmed for 2-wire or 3-wire operation to meet application requirements.
- I/O Terminals 5, 6, 7 and 8 are fully programmable and provide added flexibility. Programmable functions include Local Control, Second Accel/Decel, Clear Fault, Preset Frequencies, RS-485 Control, Auxiliary Fault, and Purge.
- Speed can be controlled via (2) analog inputs. Both inputs can be configured for either voltage or current and can be used for applications such as PID. Voltage input can be programmed for bipolar operation.
- The drive is shipped with a jumper that is installed between I/O Terminals 01 and 11. This jumper can be removed when using I/O Terminal 01 as a Stop or Enable input.

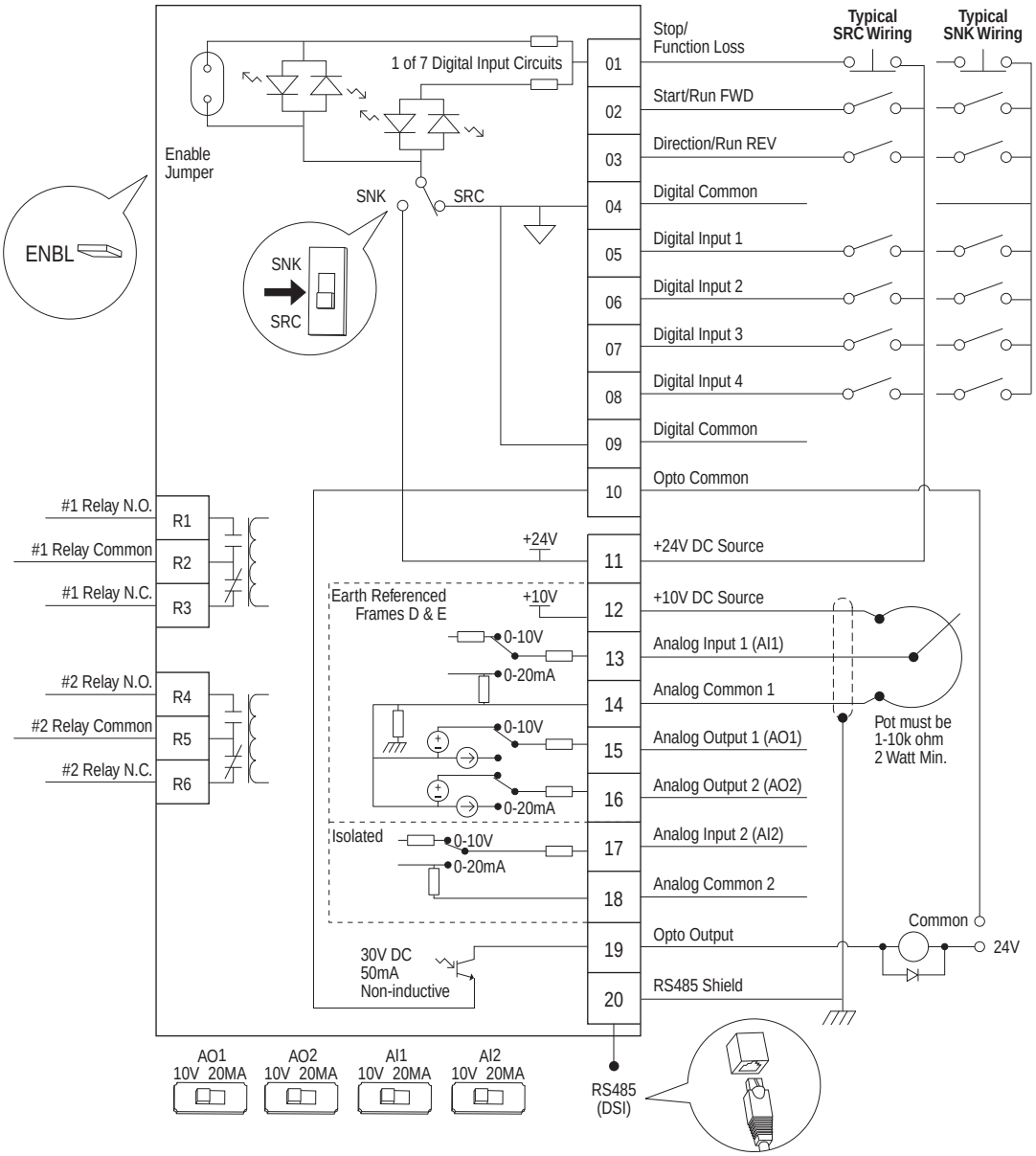

Control I/O Terminal Designations

No.	Signal	Default	Description	Parameter
01	Stop / Function Loss	Coast	Factory-installed jumper or a normally closed input must be present for the drive to start. Program with P036 [Start Source].	P036
02	Start/Run FWD	–	HAND Mode: Command comes from Integral Keypad. AUTO Mode: I/O Terminal 02 is active. Program with P036 [Start Source].	P036, P037
03	Direction/Run REV	Rev Disabled	To enable reverse operation, program with A166 [Reverse Disable]. Program with P036 [Start Source].	P036, P037, A166
04	Digital Common	–	For digital inputs. Tied to I/O Terminal 09. Electronically isolated with digital inputs from analog I/O and opto output.	-
05	Digital Input 1	Purge(1)	Program with T051 [Digital In1 Sel].	T051
06	Digital Input 2	Local	Program with T052 [Digital In2 Sel].	T052
07	Digital Input 3	Clear Fault	Program with T053 [Digital In3 Sel].	T053
08	Digital Input 4	Comm Port	Program with T054 [Digital In4 Sel].	T054
09	Digital Common	–	For digital inputs. Tied to I/O Terminal 04. Electronically isolated with digital inputs from analog I/O and opto output.	-
10	Opto Common	–	For opto-coupled outputs. Electronically isolated with opto output from analog I/O and digital inputs.	-
11	+24V DC	–	Drive supplied power for digital inputs. Referenced to Digital Common. Max Output: 100 mA.	
12	+10V DC	–	Drive supplied power for 0-10V external potentiometer. Referenced to Analog Common. Max Output: 15 mA.	P038
13	Analog Input 1	0...10V	External 0...10V (unipolar), 0...20mA or 4...20mA input supply or potentiometer wiper. Default input is 0...10V. For current (mA) input, set AI1 DIP switch to 20 mA. Program with T069 [Analog In 1 Sel]. Input Impedance:100k ohm (Voltage Mode) 250 ohm (Current Mode)	T069, T070, T071, T072
14	Analog Common 1	–	Common for Analog Input 1 and Analog Output 1 and 2. Electrically isolated from digital I/O and opto output.	
15	Analog Output 1	OutFreq 0...10	Default analog output is 0-10V. For current (mA) value, set AO1 DIP switch to 20 mA. Program with T082 [Analog Out1 Sel]. Max Load: 4...20mA = 525 ohm (10.5V) 0...10V = 1k ohm (10 mA)	P038, T051-T054, A152
16	Analog Output 2	OutCurr 0...10	Default analog output is 0...10V. For a current (mA) value, set AO2 DIP switch to 20 mA. Program with T085 [Analog Out2 Sel]. Max Load: 4...20mA = 525 ohm (10.5V) 0...10V = 1k ohm (10 mA)	T082, T084, T085, T086, T087
17	Analog Input 2	0...10V	Optically isolated external 0...10V (unipolar), ±10V (bipolar), 0...20 mA or 4...20 mA input supply or potentiometer wiper. Default input is 0...10V. For current (mA) input, set AI2 DIP switch to 20 mA. Program with T073 [Analog In 2 Sel]. Input Impedance: 100k ohm (Voltage Mode) 250 ohm (Current Mode)	T073, T074, T075, T076
18	Analog Common 2	–	For Analog Input 2. Electronically isolated from digital I/O and opto output. With Analog Input 2, provides one fully isolated analog input channel.	
19	Opto Output	At Frequency	Program with T065 [Opto Out Sel].	T065, T066, T068
20	RS-485 (DSI) Shield	–	Terminal connected to Safety Ground - PE when using the RS-485 (DSI) Communication Port.	

(1) See the PowerFlex 400 user manual, publication 22C-UM001 for Important information regarding Stop commands and the [Digital Inx Sel] Purge option.

No.	Signal	Default	Description	Parameter
R1	#1 Relay N.O.	Ready/Fault	Normally open contact for No. 1 output relay.	T055
R2	#1 Relay Common	–	Common for output relay.	
R3	#1 Relay N.C.	Ready/Fault	Normally closed contact for No. 1 output relay.	T055
R4	#2 Relay N.O.	Motor Running	Normally open contact for No. 2 output relay.	T060
R5	#2 Relay Common	–	Common for output relay.	
R6	#2 Relay N.C.	Motor Running	Normally closed contact for No. 2 output relay.	T060

Selection DIP switches: Analog Input (AI1 & AI2) Analog Output (AO1 & AO2)	0...10V	Sets analog output to either voltage or current. Settings must match: AI1 & T069 [Analog In 1 Sel] AI2 & T073 [Analog In 2 Sel] AO1 & T082 [Analog Out1 Sel] AO2 & T085 [Analog Out2 Sel]
Sink/source DIP switch	Source (SRC)	Inputs can be wired as Sink (SNK) or Source (SRC) with DIP switch setting.

Specifications

User Installed Relay Board Terminal Designations

No.	Signal	Default	Description	Parameter
3A	#3 Relay N.O.	Ready/Fault	Normally open contact for Number 3 Output Relay	R221
3B	#3 Relay Common	–	Common for Number 3 Output Relay	
4A	#4 Relay N.O.	Ready/Fault	Normally open contact for Number 4 Output Relay	R224
4B	#4 Relay Common	–	Common for Number 4 Output Relay	
5A	#5 Relay N.O.	Ready/Fault	Normally open contact for Number 5 Output Relay	R227
5B	#5 Relay Common	–	Common for Number 5 Output Relay	
6A	#6 Relay N.O.	Ready/Fault	Normally open contact for Number 6 Output Relay	R230
6B	#6 Relay Common	–	Common for Number 6 Output Relay	
7A	#7 Relay N.O.	Ready/Fault	Normally open contact for Number 7 Output Relay	R233
7B	#7 Relay Common	–	Common for Number 7 Output Relay	
8A	#8 Relay N.O.	Ready/Fault	Normally open contact for Number 8 Output Relay	R236
8B	#8 Relay Common	–	Common for Number 8 Output Relay	

Drive Specifications

Drive Ratings

Catalog No.	Output Ratings			Input Ratings			Branch Circuit Protection				Power Dissipation
	kW (HP)	Amps		Voltage Range	kVA	Amps	Fuses	140M Motor Protectors(1) (2)	Contactors	Min. Enclosure Volume(3) (in.^{3})	IP20 Open Watts
		45 °C	50 °C								
200...240V AC – 3-Phase Input, 0...230V 3-Phase Output											
22C-B012N103	2.2 (3.0)	12	12	180...265	6.5	15.5	20	140M-F8E-C16	100-C23	5098	146
22C-B017N103	3.7 (5.0)	17.5	17.5	180...265	8.8	21	30	140M-F8E-C25	100-C37	5098	207
22C-B024N103	5.5 (7.5)	24	24	180...265	10.9	26.1	35	140M-F8E-C32	100-C37	5098	266
22C-B033N103	7.5 (10)	33	33	180...265	14.4	34.6	45	140M-F8E-C45	100-C45	5098	359
22C-B049A103	11 (15)	49	49	180...265	21.3	51	70	–	100-C60	–	488
22C-B065A103	15 (20)	65	65	180...265	28.3	68	90	–	100-C85	–	650
22C-B075A103	18.5 (25)	75	75	180...265	32.5	78	100	–	100-D95	–	734
22C-B090A103	22 (30)	90	81	180...265	38.3	92	125	–	100-D110	–	778
22C-B120A103	30 (40)	120	120	180...265	51.6	124	175	–	100-D180	–	1055
22C-B145A103	37 (50)	145	130	180...265	62.4	150	200	–	100-D180	–	1200
380...480V AC – 3-Phase Input, 0...460V 3-Phase Output											
22C-D6P0N103	2.2 (3.0)	6	6	340...528	6.3	7.5	10	140M-D8E-C10	100-C09	5098	105
22C-D010N103	4.0 (5.0)	10.5	10.5	340...528	10.9	13	20	140M-D8E-C16	100-C16	5098	171
22C-D012N103	5.5 (7.5)	12	12	340...528	11.9	14.2	20	140M-D8E-C16	100-C23	5098	200
22C-D017N103	7.5 (10)	17	17	340...528	15.3	18.4	25	140M-D8E-C20	100-C23	5098	267
22C-D022N103	11 (15)	22	22	340...528	19.2	23	30	140M-F8E-C32	100-C30	5098	329
22C-D030N103	15 (20)	30	27	340...528	25.8	31	40	140M-F8E-C32	100-C37	5098	435
22C-D038A103	18.5 (25)	38	38	340...528	33.3	40	50	140M-F8E-C45	100-C60	9086	606
22C-D045A103	22 (30)	45.5	45.5	340...528	39.1	47	60	–	100-C60	–	738
22C-D060A103	30 (40)	60	54	340...528	53.3	64	80	–	100-C85	–	764
22C-D072A103	37 (50)	72	72	340...528	60.7	73	100	–	100-C85	–	1019
22C-D088A103	45 (60)	88	88	340...528	74.9	90	125	–	100-D110	–	1245
22C-D105A103	55 (75)	105	105	340...528	89	107	150	–	100-D140	–	1487
22C-D142A103	75 (100)	142	128	340...528	124.8	150	200	–	100-D180	–	2043
22C-D170A103	90 (125)	170	170	340...528	142	170	250	–	100-D250	–	2617

Drive Ratings (Continued)

22C-D208A103	110 (150)	208	208	340-528	167	200	250	–	100-D250	–	3601
22C-D260A103	132 (200)	260	260	340-528	196	235	300	–	100-D300	–	3711
22C-D310A103	160 (250)	310	290	340-528	242	290	400	–	100-D420	–	4208
22C-D370A103	200 (300)	370	370	340-528	304	365	500	–	100-D420	–	4916
22C-D460A103	250 (350)	460	410	340-528	387	465	600	–	100-D630	–	6167

(1) The AIC ratings of the Bulletin 140M Motor Protector Circuit Breakers may vary. See the Use of Motor Protection Circuit Breakers with Variable-Frequency Drives Application Techniques, publication 140M-AT002.
(2) Manual Self-Protected (Type E) Combination Motor Controller, UL listed for 208 Wye or Delta, 240 Wye or Delta, 480Y/277 or 600Y/347. Not UL listed for use on 480V or 600V Delta/Delta, corner ground, or high-resistance ground systems.
(3) When using a Manual Self-Protected (Type E) Combination Motor Controller, the drive must be installed in a ventilated or non-ventilated enclosure with the minimum volume specified in this column. Application specific thermal considerations may require a larger enclosure.

Certifications

Category	Specification	
Agency Certification	c UL us	Listed to UL508C and CAN/CSA-22.2 Listed to UL508C for plenums
		Radiocommunications Act:1992 (including Amendments up to 2018) Radiocommunications (Electromagnetic Compatibility) Standard 2017 Radiocommunications Labelling (Electromagnetic Compatibility) Notice 2017
	CE	Marked for all applicable European Directives EMC Directive (2014/30/EU) EN 61800-3 LVD Directive (2014/35/EU) EN 61800-5-1
	The drive is also designed to meet the appropriate portions of the following specifications: NFPA 70 - US National Electrical Code NEMA ICS 3.1 - Safety standards for Construction and Guide for Selection, Installation, and Operation of Adjustable Speed Drive Systems. IEC 146 - International Electrical Code.	
Protection	Bus Overvoltage Trip:	200...240V AC Input: 405V DC bus voltage (equivalent to 290V AC incoming line) 380...460V AC Input: 810V DC bus voltage (equivalent to 575V AC incoming line)
	Bus Undervoltage Trip:	200...240V AC Input: 210V DC bus voltage (equivalent to 150V AC incoming line) 380...480V AC Input: 390V DC bus voltage (equivalent to 275V AC incoming line)
	Power Ride-Thru:	100 ms
	Logic Control Ride-Thru:	0.5 s min, 2 s typical
	Electronic Motor Overload Protection:	Provides class 10 motor overload protection according to NEC article 430 and motor over-temperature protection according to NEC article 430.126 (A) (2). UL 508C File 29572.
	Overcurrent:	200% hardware limit, 300% instantaneous fault
	Ground Fault Trip:	Phase-to-ground on drive output
	Short Circuit Trip:	Phase-to-phase on drive output
Environment	Altitude:	1000 m (3300 ft) max without derating. Above 1000 m (3300 ft) derate 3% for every 305 m (1000 ft).
	Max Surrounding Air Temperature without derating: IP20, NEMA/UL Type Open: IP30, NEMA/UL Type 1:	 –10...+50 °C (14...122 °F) –10...+45 °C (14...113 °F)
	Cooling Method:	Fan: All drive ratings
	Storage Temperature:	–40...+85 °C (–40...+185 °F)
	Atmosphere:	**Important:** Drive **must not** be installed in an area where the ambient atmosphere contains volatile or corrosive gas, vapors, or dust. If the drive is not going to be installed for a period of time, it must be stored in an area where it will not be exposed to a corrosive atmosphere.
	Relative Humidity:	0...95% noncondensing
	Shock (operating):	15G peak for 11 ms duration (±1.0 ms)
	Vibration (operating):	1G peak, 5...2000 Hz
	Seismic Rating	Meets the seismic requirements of the 2003 International Building Code as specified by AC156.

Certifications (Continued)

Category	Specification		
Electrical	Voltage Tolerance:		200...240V ±10% 380...480V ±10%
	Frequency Tolerance:		48...63 Hz
	Input Phases:		Three-phase input provides full rating. Single-phase operation provides 35% rated current.
	Displacement Power Factor:		0.98 across entire speed range
	Efficiency:		97.5% at rated amps, nominal line voltage
	Transistor Type:		Isolated Gate Bipolar (IGBT)
	Internal DC Bus Choke: 200-240V AC Input: 380-480V AC Input:		 11...37 kW (15...50 HP) Panel Mount Drives 18.5...160 kW (25...150 HP) Panel Mount Drives
	Internal AC Line Reactor 380-480V AC Input:		 200...250 kW (300...350 HP) Panel Mount Drives
Control	Method:		Sinusoidal PWM, Volts/Hertz
	Carrier Frequency Frames C and D: Frames E and F:		 2...10 kHz, Drive rating based on 4 kHz 2...8 kHz, Drive rating based on 4 kHz
	Frequency Accuracy Digital Input: Analog Input: Analog Output:		 Within ±0.05% of set output frequency Within 0.5% of max output frequency, 10-Bit resolution ±2% of full scale, 10-Bit resolution
	Speed Regulation - Open Loop with Slip Compensation:		±1% of base speed across a 60:1 speed range
	Output Frequency:		0...320 Hz (programmable)
	Stop Modes:		Multiple programmable stop modes including - Ramp, Coast, DC-Brake, Ramp-to-Hold and S-curve.
	Accel/Decel:		Two independently programmable accel and decel times. Each time may be programmed from 0...600 s in 0.1 s increments.
	Drive Overload:		110% Overload capability for up to 1 min
	Electronic Motor Overload Protection		Provides class 10 motor overload protection according to NEC article 430 and motor over-temperature protection according to NEC article 430.126 (A) (2). UL 508C File 29572.
Control Inputs	Digital:	Quantity:	(3) Semi-programmable (4) Programmable
		Type Source Mode (SRC): Sink Mode (SNK):	 18...24V = ON, 0...6V = OFF 0...6V = ON, 18...24V = OFF
	Analog:	Quantity:	(1) Isolated, -10...10V or 4...20 mA (1) Non-isolated, 0...10V or 4...20 mA
		Specification Resolution: 0...10V DC Analog: 4...20mA Analog: External Pot:	 10-bit 100k ohm input impedance 250 ohm input impedance 1...10k ohm, 2 W min
Control Outputs	Relay:	Quantity:	(2) Programmable Form C (6) Optional Programmable Form A (Drive Frames D through H Only)
		Specification Resistive Rating: Inductive Rating:	 3.0 A @ 30V DC, 3.0 A @ 125V, 3.0 A @ 240V AC 0.5 A @ 30V DC, 0.5 A @ 125V, 0.5 A @ 240V AC
	Opto:	Quantity:	(1) Programmable
		Specification:	30V DC, 50 mA Non-inductive
	Analog:	Quantity:	(2) Non-Isolated, 0...10V, or 4...20 mA
		Specification Resolution: 0...10V DC Analog: 4...20mA Analog:	 10-bit 1k ohm min 525 ohm max
Keypad	Display:	Integral 2 line by 16 character LCD with (5) LED Indicators	
	Languages:	English, Français, Español, Italiano, Deutsch, Português, Nederlands	

Certifications (Continued)

Category	Specification	
Communication	Type:	Serial (RS-485)
	Supported Protocols (Standard):	Drive Serial Interface (DSI) Modbus RTU Metasys N2 P1-Floor Level Network (FLN)
	Supported Protocols (Optional):	BACnet DeviceNet EtherNet/IP PROFIBUS DP ControlNet LonWorks
	Software (Optional):	Windows Based Pocket PC/Windows Mobile 2003

Parameter List

Parameter Number	Parameter Name	Description	Factory Default
		Basic Display Group	
b001	Output Freq	Output frequency present at T1, T2 & T3 (U, V & W)	Read-only
b002	Commanded Freq	Value of the active frequency command	Read-only
b003	Output Current	Output current present at T1, T2 & T3 (U, V & W)	Read-only
b004	Output Voltage	Output voltage present at T1, T2 & T3 (U, V & W)	Read-only
b005	DC Bus Voltage	Present DC bus voltage level	Read-only
b006	Drive Status	Present operating condition of the drive	Read-only
b007	Fault 1 Code	A code that represents a drive fault	Read-only
b008	Process Display	The output frequency scaled by parameter A160 [Process Factor]	Read-only
b010	Output Power	Output power present at T1, T2 & T3 (U, V & W)	Read-only
b011	Elapsed MWh	Accumulated output energy of the drive	Read-only
b012	Elapsed Run Time	Accumulated time that the drive has output power since the last A195 [Reset Meters]	Read-only
b013	Torque Current	Displays the torque portion of the output current	Read-only
b014	Drive Temp	Present operating temperature of the drive power section	Read-only
b015	Elapsed kWh	0.0...100.0 kWh	Read-only
		Basic Program Group	
P031	Motor NP Volts	20...drive rated volts	Based on Drive Rating
P032	Motor NP Hertz	15...320 Hz	60 Hz
P033	Motor OL Current	0.0 Amps to (Drive Rated Amps x 2) in units of 0.1 Amps	Drive Rated Amps
P034	Minimum Freq	0.0...320.0 Hz	0.0 Hz
P035	Maximum Freq	0.0...320.0 Hz	60 Hz
P036	Start Source	7 settings; Keypad, 3-Wire, 2-Wire, 2-Wire Level Sensitive, 2-Wire High Speed, Comm Port, 2-Wire Level Sensitive with Enable	2-Wire Level Sensitive
P037	Stop Mode	8 settings; Ramp Clear Fault, Coast Clear Fault, DC Brake Clear Fault, DC Brake w/Shutoff Clear Fault, Ramp, Coast, DC Brake, DC Brake w/Shutoff	Coast, CF (Clear Fault)
P038	Speed Reference	6 settings; Drive Keypad, Internal Freq, Analog Input 1, Analog Input 2, Preset Freq, Communications Port	Analog In1
P039	Accel Time 1	0.00...600.00 seconds	20.00 Secs (0.3...150 HP) 60.00 Secs (200...350 HP)
P040	Decel Time 1	0.00...600.00 seconds	20.00 Secs (0.3...150 HP) 60.00 Secs (200...350 HP)
P041	Reset To Defalts	Used to reset drive to factory default settings	Ready/Idle
P042	Auto Mode	4 settings; No Function, Hand-Off-Auto, Local/Remote, Auto/Manual	Hnd-Off-Auto
P043	Motor OL Ret	2 settings; Disabled, Enabled	Disabled

Parameter List (Continued)

Parameter Number	Parameter Name	Description	Factory Default
		Terminal Block Group	
T051	Digital In1 Sel	29 settings; Not Used, Purge, Auto Mode, Local, Comm Port, PID Disable, PID Hold, PID Reset, Preset Freq, Aux Fault, Clear Fault, RampStop Clear Fault, CoastStop Clear Fault, DCInjStop Clear Fault, Anlg1 InCtrl, Anlg2 InCtrl, MOP Up, MOP Down, Acc & Dec 2, Current Lmt2, Force DC, Mtr I-Lock 1, Mtr I-Lock 2, Mtr I-Lock 3, Mtr I-Lock 4, Cmd Reverse, Logic In 1, Logic In 2, Damper Input	Purge
T052	Digital In2 Sel		Local
T053	Digital In3 Sel		Clear Fault
T054	Digital In4 Sel		Comm Port
T055	Relay Out1 Sel	20 settings; Ready/Fault, At Frequency, MotorRunning, Hand Active, Motor Overld, Ramp Reg, Above Freq, Above Cur, Above DCVolt, Above Anlg 2, Above PF Ang, Anlg In Loss, ParamControl, Retries Exst, NonRec Fault, Reverse, Logic In 1, Logic In 2, Aux Motor, Fault	Ready/Fault
T056	Relay Out1 Level	0.0...9999	0.0
T058	Relay 1 On Time	0.0...600.0 s	0.0 s
T059	Relay 1 Off Time	0.0...600.0 s	0.0 s
T060	Relay Out2 Sel	20 settings; Ready/Fault, At Frequency, MotorRunning, Hand Active, Motor Overld, Ramp Reg, Above Freq, Above Cur, Above DCVolt, Above Anlg 2, Above PF Ang, Anlg In Loss, ParamControl, Retries Exst, NonRec Fault, Reverse, Logic In 1, Logic In 2, Aux Motor, Fault	MotorRunning
T061	Relay Out2 Level	0.0...9999	0.0
T063	Relay 2 On Time	0.0...600.0 s	0.0 s
T064	Relay 2 Off Time	0.0...600.0 s	0.0 s
T065	Opto Out Sel	19 settings; Ready/Fault, At Frequency, MotorRunning, Hand Active, Motor Overld, Ramp Reg, Above Freq, Above Cur, Above DCVolt, Above Anlg 2, Above PF Ang, Anlg In Loss, ParamControl, Retries Exst, NonRec Fault, Reverse, Logic In 1, Logic In 2, Fault	At Frequency
T066	Opto Out Level	0.0...9999	0.0
T068	Opto Out Logic	2 settings; NO (Normally Open), NC (Normally Closed)	NO (Normally Open)
T069	Analog In 1 Sel	6 settings; Current Mode (0...20 mA), Current Mode (4...20 mA), Voltage Mode - Unipolar (0...10V), Current Mode Square Root (0...20 mA), Current Mode Square Root (4...20 mA), Voltage Mode Square Root - Unipolar (0...10V)	Voltage Mode - Unipolar (0...10V)
T070	Analog In 1 Lo	0.0...100.0%	0.0%
T071	Analog In 1 Hi	0.0...100.0%	100.0%
T072	Analog In 1 Loss	7 settings; Disabled, Fault, Stop, Zero Ref, Min Freq Ref, Max Freq Ref, Preset Freq0	Disabled
T073	Analog In 2 Sel	8 settings; Current Mode (0...20 mA), Current Mode (4...20 mA), Voltage Mode - Unipolar (0...10V), Voltage Mode - Bipolar (-10...+10V), Current Mode Square Root (0...20 mA), Current Mode Square Root (4...20 mA), Voltage Mode Square Root - Unipolar (0...10V), Voltage Mode Square Root - Bipolar (-10...+10V)	Voltage Mode - Unipolar (0...10V)
T074	Analog In 2 Lo	0.0...100.0%	0.0%
T075	Analog In 2 Hi	0.0...100.0%	100.0%
T076	Analog In 2 Loss	7 settings; Disabled, Fault, Stop, Zero Ref, Min Freq Ref, Max Freq Ref, Preset Freq0	Disabled
T077	Sleep-Wake Sel	5 settings; Disabled, Analog In 1, Analog In 2, Commanded Freq, Ind Slp Wake	Disabled
T078	Sleep Level	0.0...100.0%	10.0%
T079	Sleep Time	0.0...600.0 s	0.0 s
T080	Wake Level	0.0...100.0%	15.0%
T081	Wake Time	0.0...600.0 s	0.0 s
T082	Analog Out1 Sel	30 settings; OutFreq 0...10, OutCurr 0...10, OutTorq 0...10, OutVolt 0...10, OutPowr 0...10, Setpnt 0...10, TstData 0...10, OutFreq 0...20, OutCurr 0...20, OutTorq 0...20, OutVolt 0...20, OutPowr 0...20, Setpnt 0...20, TstData 0...20, OutFreq 4...20, OutCurr 4...20, OutTorq 4...20, OutVolt 4...20, OutPowr 4...20, Setpnt 4...20, TstData 4...20, MinFreq 0...10, MinFreq 0...20, MinFreq 4...20, AnlgIn1 0...10, AnlgIn1 0...20, AnlgIn1 4...20, AnlgIn2 0...10, AnlgIn2 0...20, AnlgIn2 4...20	OutFreq 0...10
T083	Analog Out1 High	0.0...800%	100%
T084	Anlg Out1 Setpt	0.0...100.0%	0.0%
T085	Analog Out2 Sel	30 settings; OutFreq 0...10, OutCurr 0...10, OutTorq 0...10, OutVolt 0...10, OutPowr 0...10, Setpnt 0...10, TstData 0...10, OutFreq 0...20, OutCurr 0...20, OutTorq 0...20, OutVolt 0...20, OutPowr 0...20, Setpnt 0...20, TstData 0...20, OutFreq 4...20, OutCurr 4...20, OutTorq 4...20, OutVolt 4...20, OutPowr 4...20, Setpnt 4...20, TstData 4...20, MinFreq 0...10, MinFreq 0...20, MinFreq 4...20, AnlgIn1 0...10, AnlgIn1 0...20, AnlgIn1 4...20, AnlgIn2 0...10, AnlgIn2 0...20, AnlgIn2 4...20	OutCurr 0...10
T086	Analog Out2 High	0.0...800%	100%
T087	Anlg Out2 Setpt	0.0...100.0%	0.0%
T088	Anlg Loss Delay	0.0...20.0 Secs	0.0 s
T089	Analog In Filter	0...14	0

Parameter List (Continued)

Parameter Number	Parameter Name	Description	Factory Default
T090	Sleep Sel	8 settings; AI1 > SlpLvl, AI1 < SlpLvl, AI2 > SlpLvl, AI2 < SlpLvl, OFrq>SlpLvl, OFrq<SlpLvl, CFrq>SlpLvl, CFrq<SlpLvl	AI1 > SlpLvl
T091	Wake Sel	16 settings: AI1 > WakLvl, AI1 < WakLvl, AI2 > WakLvl, AI2 < WakLvl, OFrq>WakLvl, OFrq<WakLvl, FB-SP>WakLvl, SP-FB>WakLvl, AI1 > WakDev, AI1 < WakDev, AI2 > WakDev, AI2 < WakDev, OFrq>WakDev, OFrq<WakDev, FB-SP>WakDev, SP-FB>WakDev	AI1 > WakLvl
Communications Group			
C101	Language	7 settings; English, Francais, Espanol, Italiano, Deutsch, Portugues, Nederlands	English
C102	Comm Format	7 settings; RTU 8-N-1, RTU 8-E-1, RTU 8-O-1, RTU 8-N-2, RTU 8-E-2, RTU 8-O-2, MetaSys N2, P1 8-N-1, P1 8-E-1, P1 8-O-1	RTU 8-N-1
C103	Comm Data Rate	6 settings; 1200, 2400, 4800, 9600, 19.2K, 38.4K	9600
C104	Comm Node Addr	1...247	100
C105	Comm Loss Action	6 settings; Fault, Coast Stop, Stop, Continu Last, Run Preset 0, Kypd Inc/Dec	Fault
C106	Comm Loss Time	0.1...60.0 s	5.0 s
C107	Comm Write Mode	2 settings; Save, RAM Only	Save
C108	Start Source 2	7 settings; Keypad, 3-Wire, 2-Wire, 2-Wire Level Sensitive, 2-Wire High Speed, Comm Port, 2-Wire Level Sensitive with Enable	2-Wire Level Sensitive
C109	Speed Ref 2	6 settings; Drive Keypad, Internal Freq, Analog Input 1, Analog Input 2, Preset Freq, Communications Port	Analog Input 1
		Advanced Program Group	
A141	Purge Frequency	0.0...320.0 Hz	5.0 Hz
A142	Internal Freq	0.00...320.00 Hz	60.00 Hz
A143	Preset Freq 0	0.0...320.0 Hz	0.0 Hz
A144	Preset Freq 1		5.0 Hz
A145	Preset Freq 2		10.0 Hz
A146	Preset Freq 3		20.0 Hz
A147	Accel Time 2	0.00...600.00 s	30.00 s
A148	Decel Time 2	0.01...600.00 s	30.00 s
A149	S Curve %	0...100%	20%
A150	PID Trim Hi	0.0...320.0 Hz	60.0 Hz
A151	PID Trim Lo	0.0...320.0 Hz	0.0 Hz
A152	PID Ref Sel	9 settings; PID Disabled, PID Setpoint, Analog In 1, Analog In 2, Comm Port, Setpnt Trim, A-In 1 Trim, A-In 2 Trim, Comm Trim	PID Disabled
A153	PID Feedback Sel	9 settings; Analog In 1, Analog In 2, Comm Port, ACT1 - ACT2, ACT1 + ACT2, ACT1 * ACT2, ACT1 / ACT2, Min A1, A2, Max A1, A2	Analog In 1
A154	PID Prop Gain	0.00...99.99	1.00
A155	PID Integ Time	0.0...999.9 s	2.0 s
A156	PID Diff Rate	0.00...99.99 (1/s)	0.00 (1/s)
A157	PID Setpoint	0.0...100.0%	0.0%
A158	PID Deadband	0.0...10.0%	0.0%
A159	PID Preload	0.0...320.0 Hz	0.0 Hz
A160	Process Factor	0.1...999.9	30.0
A163	Auto Rstrt Tries	0...9	0
A164	Auto Rstrt Delay	0.0...160.0 s	1.0 s
A165	Start At PowerUp	2 settings; Disabled, Enabled	Disabled
A166	Reverse Disable	2 settings; Rev Enabled, Rev Disabled	Rev Disabled
A167	Flying Start En	2 settings; Disabled, Enabled	Disabled
A168	PWM Frequency	2.0...10.0 kHz (Frame C and D drives); 20 to 8.0 kHz (Frame E, F, G and H drives)	4.0 kHz
A169	PWM Mode	2 settings; Space Vector, 2-Phase	2-Phase
A170	Boost Select	16 settings Frames C-F; Custom V/Hz, 30.0 VT, 35.0 VT, 40.0 VT, 45.0 VT, 0.0 no IR, 0.0, 2.5, 5.0, 7.5, 10.0, 12.5, 15.0, 17.5, 20.0, "Kepco" Curve 16 settings Frames G-H; Custom V/Hz, 30.0 VT, 35.0 VT, 40.0 VT, 45.0 VT, 0.0 no IR, 0.0, 0.2, 0.5, 0.8, 1.0, 2.0, 3.0, 4.0, 5.0, "Kepco" Curve	45.0, VT
A171	Start Boost	0.0...25.0%	2.5%
A172	Break Voltage	0.0...100.0%	25.0%

Parameter List (Continued)

Parameter Number	Parameter Name	Description	Factory Default
A173	Break Frequency	0.0...320.0 Hz	15.0 Hz
A174	Maximum Voltage	20...Drive Rated Volts	Drive Rated Volts
A175	Slip Hertz @ FLA	0.0...10.0 Hz	2.0 Hz
A176	DC Brake Time	0.0...99.9 Secs	0.0 s
A177	DC Brake Level	0.0...(Drive Rated Amps x 1.5)	(Drive Rated Amps x 0.05)
A178	DC Brk Time@Strt	0.0...99.9 s	0.0 s
A179	Current Limit 1	0.0...(Drive Rated Amps x 1.5)	(Drive Rated Amps x 1.1)
A180	Current Limit 2		
A181	Motor OL Select	3 settings; No Derate, Min Derate, Max Derate	No Derate
A182	Drive OL Mode	4 settings; Disable, Reduce CLim, Reduce PWM, Both-PWM 1st	Both-PWM 1st
A183	SW Current Trip	0.0...(Drive Rated Amps x 1.8)	0.0
A184	Load Loss Level	0.0...Drive Rated Amps	0.0
A185	Load Loss Time	0...9999 s	0 s
A186	Stall Fault Time	6 settings; 60 s, 120 s, 240 s, 360 s, 480 s, Flt Disabled	60 s
A187	Bus Reg Mode	2 settings; Disabled, Enabled	Enabled
A188	Skip Frequency 1	0...320 Hz	0 Hz
A189	Skip Freq Band 1	0.0...30.0 Hz	0.0 Hz
A190	Skip Frequency 2	0...320 Hz	0 Hz
A191	Skip Freq Band 2	0.0...30.0 Hz	0.0 Hz
A192	Skip Frequency 3	0...320 Hz	1 Hz
A193	Skip Freq Band 3	0.0...30.0 Hz	0.0 Hz
A194	Compensation	4 settings; Disabled, Electrical, Mechanical, Both	Electrical
A195	Reset Meters	3 settings; Ready/Idle, Reset MWh, Reset Time	Ready/Idle
A196	Testpoint Sel	1024...65535	1024
A197	Fault Clear	3 settings; Ready/Idle, Reset Fault, Clear Buffer	Ready/Idle
A198	Program Lock	4 settings; Unlocked, Locked-All parameters, Locked-Edit via network, Locked-P035 & A170 only	Unlocked
A199	Motor NP Poles	2...40	4
A200	Motor NP FLA	0.1...(Drive Rated Amps x 2)	Drive Rated Amps
A203	Wake Deviation	0.0...100.0%	0.0%
A204	ACT1 Input	3 settings; Analog In 1, Analog In 2, Current	Analog In 1
A205	ACT2 Input	3 settings; Analog In 1, Analog In 2, Current	Analog In 1
A206	ACT1 Minimum	0.0...200.0%	0.0%
A207	ACT1 Maximum	0.0...200.0%	100.0%
A208	ACT2 Minimum	0.0...200.0%	0.0%
A209	ACT2 Maximum	0.0...200.0%	100.0%
		Aux Relay Card Group	
R221	Relay Out3 Sel	19 settings; Ready/Fault, At Frequency, MotorRunning, Hand Active, Motor Overld, Ramp Reg, Above Freq, Above Cur, Above DCVolt, Above Anlg 2, Above PF Ang, Anlg In Loss, ParamControl, Retries Exst, NonRec Fault, Reverse, Logic In 1, Logic In 2, Aux Motor	Aux Motor
R224	Relay Out4 Sel		
R227	Relay Out5 Sel		
R230	Relay Out6 Sel		
R233	Relay Out7 Sel		
R236	Relay Out8 Sel		
R222	Relay Out3 Level	0.0...9999	0.0
R225	Relay Out4 Level		
R228	Relay Out5 Level		
R231	Relay Out6 Level		
R234	Relay Out7 Level		
R237	Relay Out8 Level		
R239	Aux Motor Mode	2 settings; Disabled, Enabled	Disabled
R240	Aux Motor Qty	6 settings; 1 Aux Mtr, 2 Aux Mtr, 3 Aux Mtr, 1 Mtr + Swap, 2 Mtr + Swap, 3 Mtr + Swap	1 Aux Mtr

Parameter List (Continued)

Parameter Number	Parameter Name	Description	Factory Default
R241	Aux 1 Start Freq	0.0...320.0 Hz	50.0 Hz
R244	Aux 2 Start Freq		
R247	Aux 3 Start Freq		
R242	Aux 1 Stop Freq	0.0...320.0 Hz	25.0 Hz
R245	Aux 2 Stop Freq		
R248	Aux 3 Stop Freq		
R243	Aux 1 Ref Add	0.0...100.0%	0.0%
R246	Aux 2 Ref Add		
R249	Aux 3 Ref Add		
R250	Aux Start Delay	0.0...999.9 s	5.0 s
R251	Aux Stop Delay	0.0...999.9 s	3.0 s
R252	Aux Prog Delay	0.00...60.00 s	0.50 s
R253	Aux AutoSwap Tme	0.0...999.9 Hr	0.0 Hr
R254	Aux AutoSwap Lvl	0.0...100.0%	50.0%
		Advanced Display Group	
d301	Control Source	0...99	Read Only
d302	Contrl In Status	0...1	Read Only
d303	Comm Status	0...1111	Read Only
d304	PID Setpnt Displ	0.0...100.0%	0.0%
d305	Analog In 1	0.0...120.0%	0.0%
d306	Analog In 2		
d307	Fault 1 Code	0...122	Read Only
d308	Fault 2 Code		
d309	Fault 3 Code		
d330	Fault 4 Code		
d331	Fault 5 Code		
d332	Fault 6 Code		
d333	Fault 7 Code		
d334	Fault 8 Code		
d335	Fault 9 Code		
d336	Fault 10 Code		
d310	Fault 1 Time-hr	0...32767 Hr	Read Only
d312	Fault 2 Time-hr		
d314	Fault 3 Time-hr		
d337	Fault 4 Time-hr		
d339	Fault 5 Time-hr		
d341	Fault 6 Time-hr		
d343	Fault 7 Time-hr		
d345	Fault 8 Time-hr		
d347	Fault 9 Time-hr		
d349	Fault 10 Time-hr		
d311	Fault 1 Time-min	0.0...60.0 Min	Read Only
d313	Fault 2 Time-min		
d315	Fault 3 Time-min		
d338	Fault 4 Time-min		
d340	Fault 5 Time-min		
d342	Fault 6 Time-min		
d344	Fault 7 Time-min		
d346	Fault 8 Time-min		
d348	Fault 9 Time-min		
d350	Fault 10 Time-min		

Parameter List (Continued)

Parameter Number	Parameter Name	Description	Factory Default
d316	Elapsed Time-hr	0...32767	Read Only
d317	Elapsed Time-min	0.0...60.0 Min	Read Only
d318	Output Powr Fctr	0.0...180.0 deg	Read Only
d319	Testpoint Data	0...FFFF	Read Only
d320	Control SW Ver	1.00...99.99	Read Only
d321	Drive Type	Used by Rockwell Automation Field service personnel	
d322	Output Speed	0.0...100.0%	Read Only
d323	Output RPM	0...24000 RPM	Read Only
d324	Fault Frequency	0.00...320.00 Hz	Read Only
d325	Fault Current	0.0...(Drive Rated Amps x 2)	Read Only
d326	Fault Bus Volts	0...820V DC	Read Only
d327	Status @ Fault	0...1	Read Only
d328	PID Fdbk Display	-200.0...200.0%	Read Only
d329	DC Bus Ripple V	0...(410 for 240V AC Drives, 820 for 46V AC Drives)V DC	Read Only

Approximate Dimensions

Ratings are in kW and (HP)

Frame	240V AC – 3-Phase		480V AC – 3-Phase	
C	2.2 (3.0) 3.7 (5.0)	5.5 (7.5) 7.5 (10)	2.2 (3.0) 4.0 (5.0) 5.5 (7.5)	7.5 (10) 11 (15) 15 (20)
D	11 (15) 15 (20)	18.5 (25) 22 (30)	18.5 (25.0) 22.0 (30.0)	30 (40)
E	30 (40) 37 (50)		37.0 (50.0) 45.0 (60.0)	55 (75) 75 (100)
F	–		90 (125)	110 (150)
G	–		132 (200)	160 (250)
H	–		200 (300)	250 (350)

Panel Mount Drive

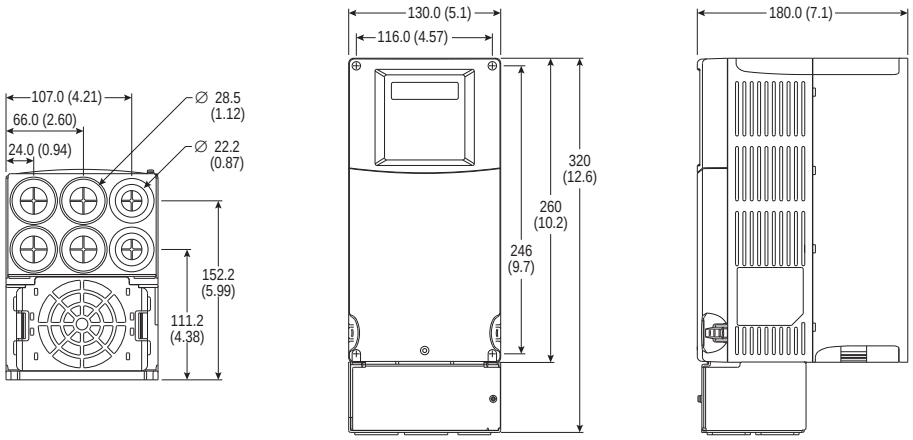

Frame C
(Shown with IP30, NEMA/UL Type 1 conversion kit.)

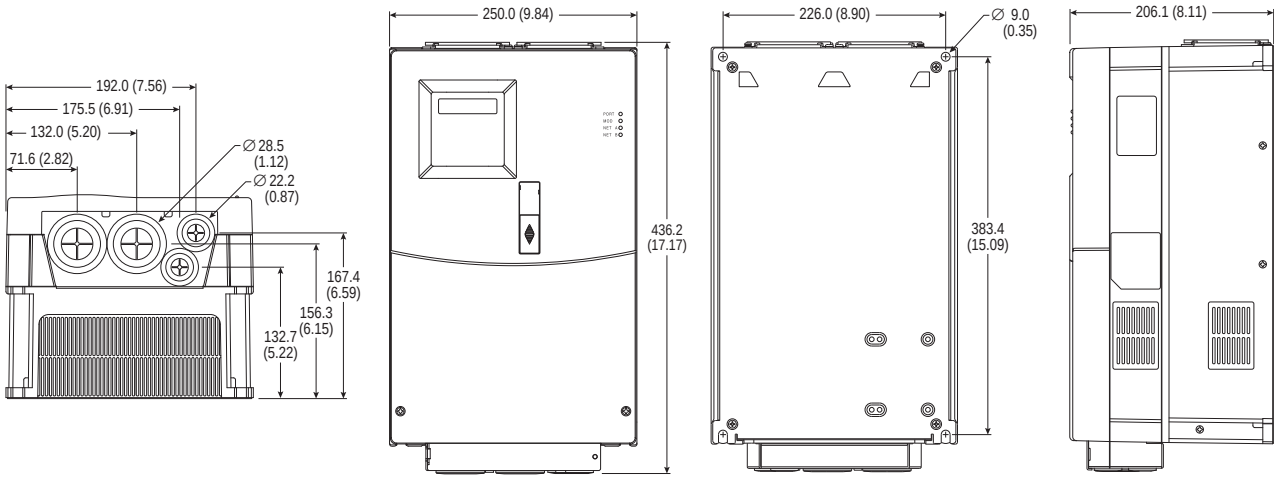

Frame D

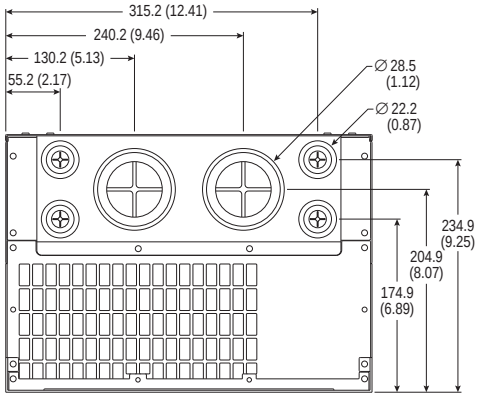

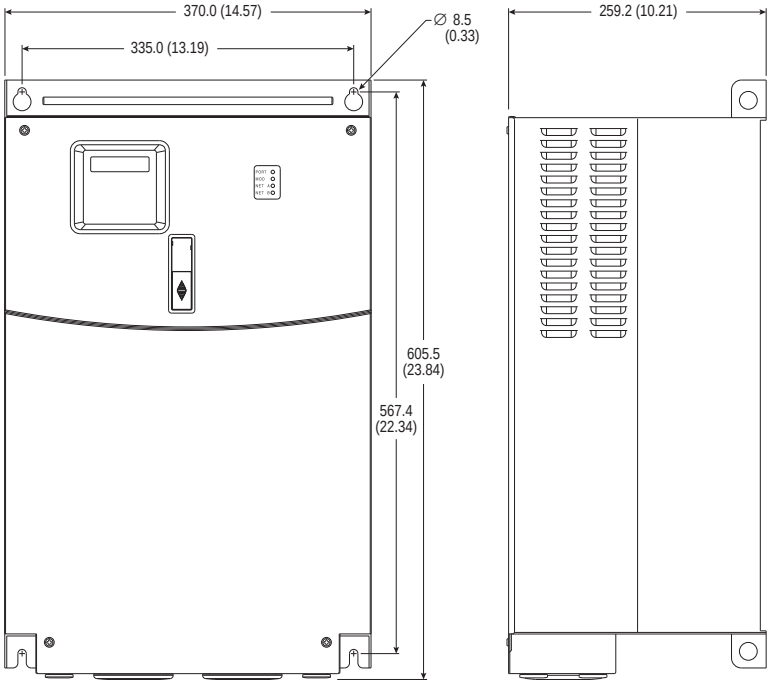

Frame E

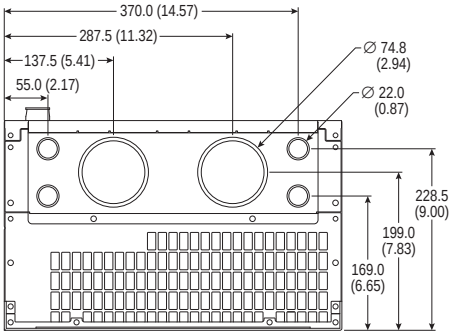

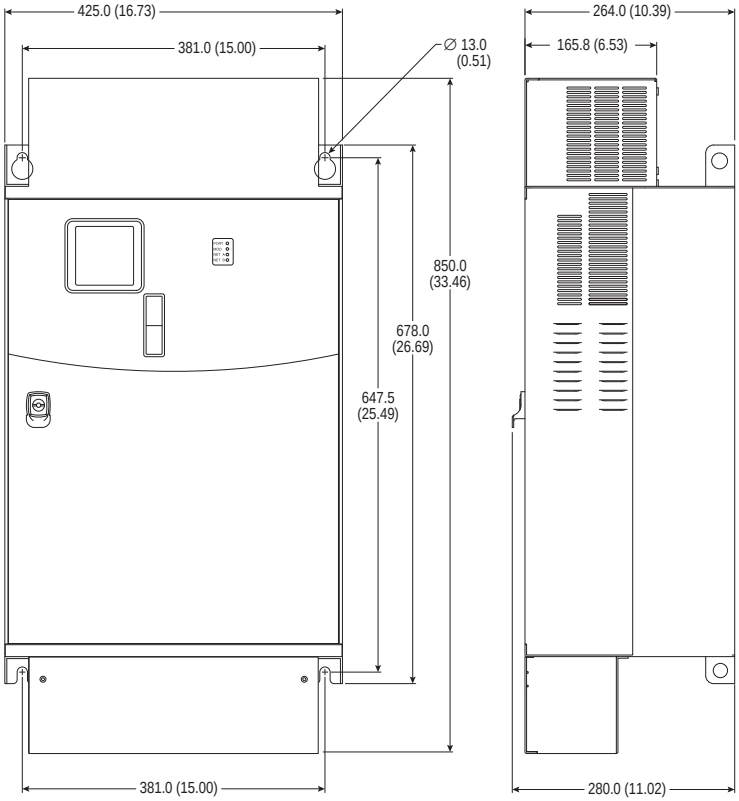

Frame F

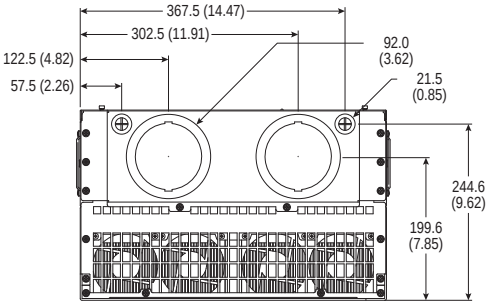

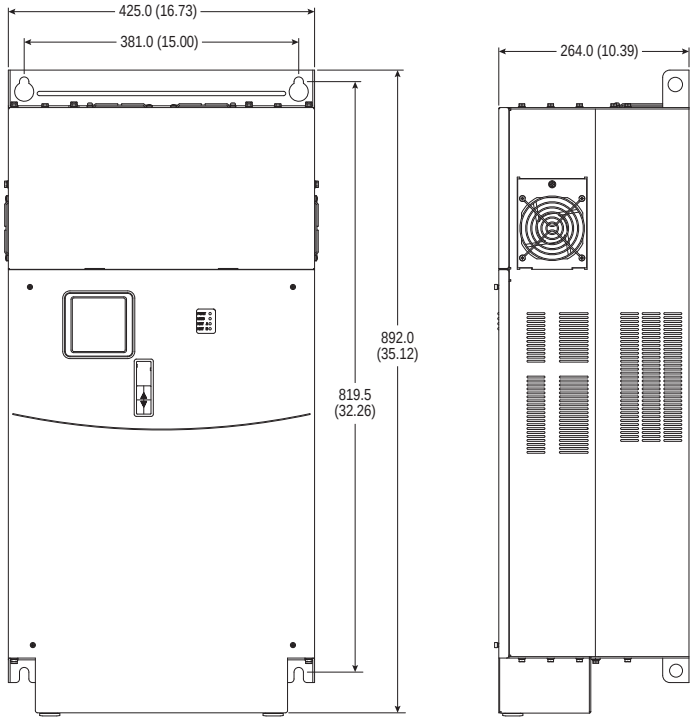

Frame G

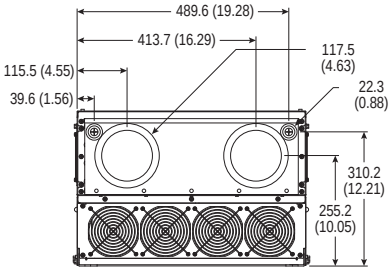

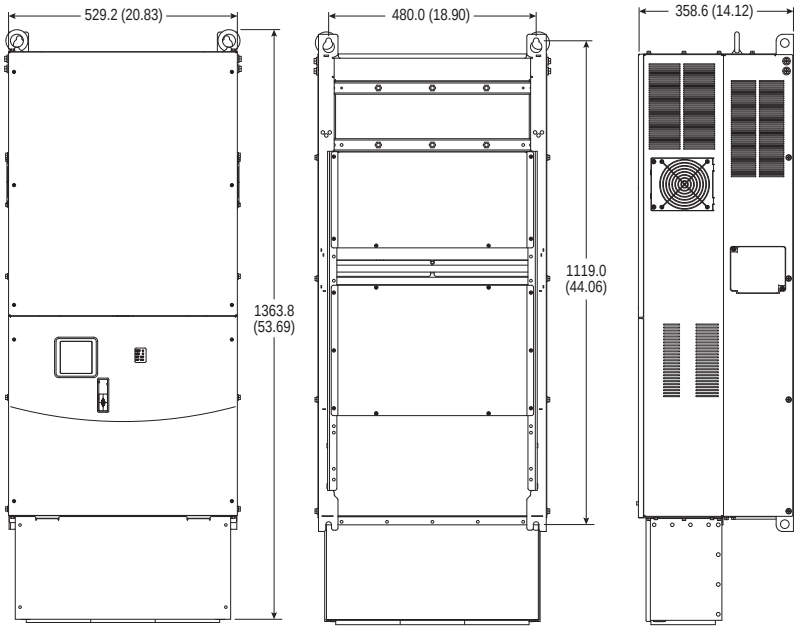

Frame H

Flange Mount Drive

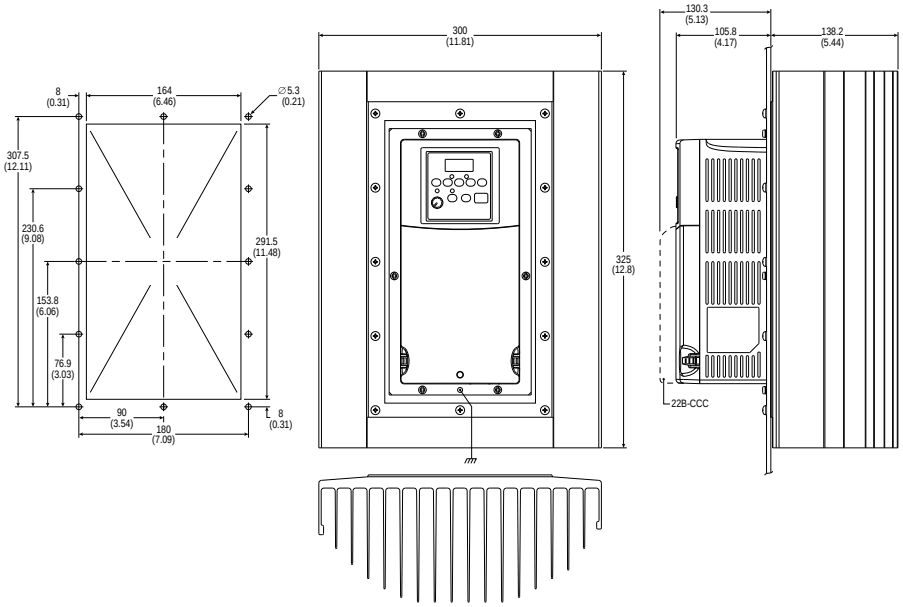

Frame C — Flange Mount

EMC Line Filters

Catalog Numbers: 22-RF018-CS, 22-RF026-CS, 22-RF034-CS

Dimensions are in millimeters and (inches)

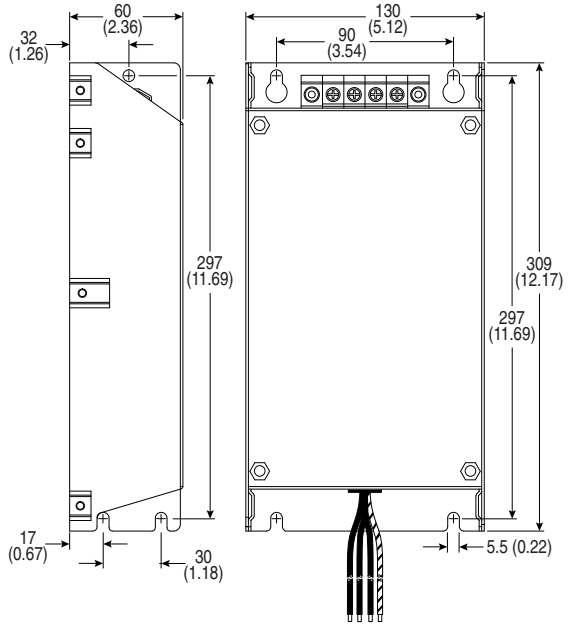

Catalog Numbers: 22-RFD036, 22-RFD050, 22-RFD070, 22-RFD100, 22-RFD150, 22-RFD180

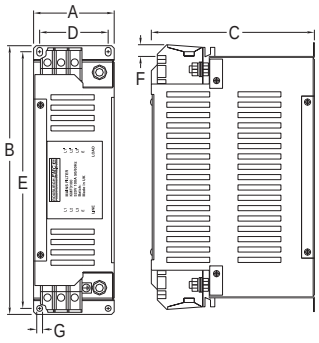

Catalog No.	A	B	C	D	E	F	G
22-RFD036	74 (2.91)	272 (10.71)	161 (6.34)	60 (2.36)	258 (10.16)	7.5 (0.30)	7 (0.28)
22-RFD050	93 (3.66)	312 (12.28)	190 (7.48)	79 (3.11)	298 (11.73)	13.5 (0.53)	7 (0.28)
22-RFD070	93 (3.66)	312 (12.28)	190 (7.48)	79 (3.11)	298 (11.73)	13.5 (0.53)	7 (0.28)
22-RFD100	93 (3.66)	312 (12.28)	190 (7.48)	79 (3.11)	298 (11.73)	13.5 (0.53)	7 (0.28)
22-RFD150	126 (4.96)	312 (12.28)	224 (8.82)	112 (4.41)	298 (11.73)	19.5 (0.77)	7 (0.28)
22-RFD180	126 (4.96)	312 (12.28)	224 (8.82)	112 (4.41)	298 (11.73)	27 (1.06)	7 (0.28)

Catalog Number: 22-RFD208

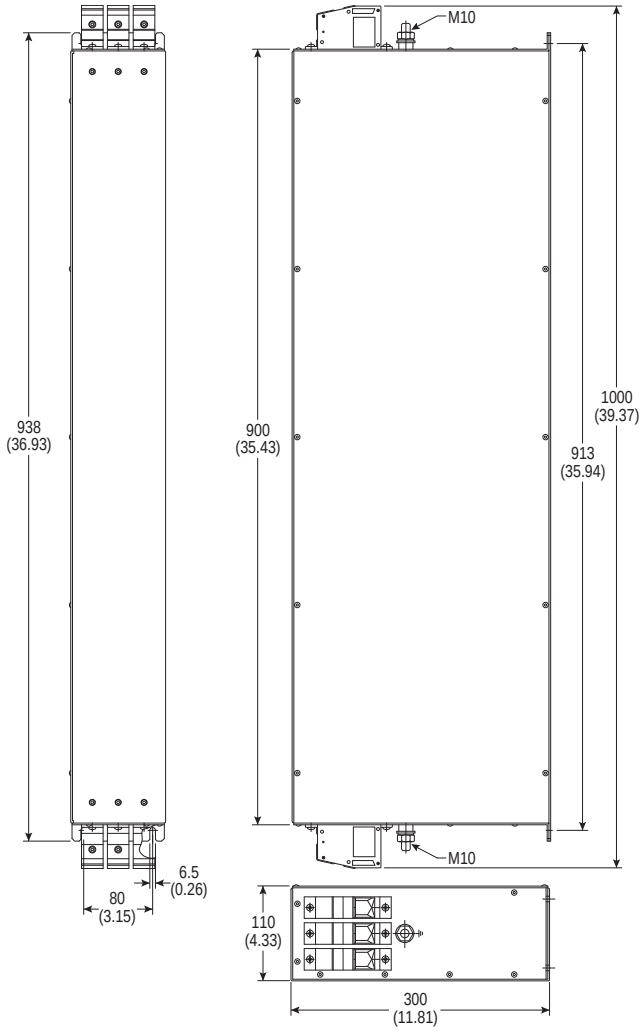

Line Reactors

Dimensions are in millimeters and (inches).
Weights are in kilograms and (pounds).

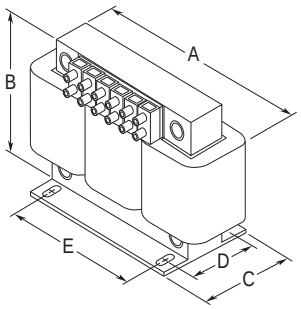

IP00 (Open) –
45 Amps (fundamental) and Below

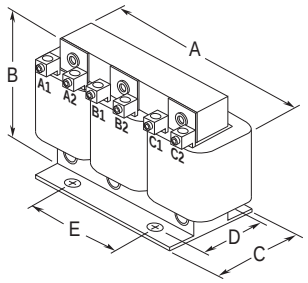

IP00 (Open) –
55 Amps (fundamental) and Above

Catalog No.	A	B	C	D	E	Weight
1321-3R8-C	152 (6.00)	122 (4.80)	86 (3.40)	67 (2.62)	51 (2.00)	5.0 (11)
1321-3R8-D	152 (6.00)	122 (4.80)	86 (3.40)	63 (2.48)	51 (2.00)	5.9 (13)
1321-3R12-A	152 (6.00)	127 (5.00)	84 (3.30)	53 (2.10)	51 (2.00)	4.1 (9)
1321-3R12-B	152 (6.00)	127 (5.00)	76 (3.00)	53 (2.10)	51 (2.00)	4.5 (10)
1321-3R12-C	152 (6.00)	127 (5.00)	91 (3.60)	69 (2.73)	51 (2.00)	8.2 (18)
1321-3R18-B	152 (6.00)	135 (5.30)	89 (3.50)	63 (2.48)	51 (2.00)	5.5 (12)
1321-3R18-C	183 (7.20)	146 (5.76)	92 (3.63)	66 (2.60)	76 (3.00)	7.3 (16)
1321-3R25-A	183 (7.20)	146 (5.76)	85 (3.35)	60 (2.35)	76 (3.00)	4.9 (11)
1321-3R25-B	183 (7.20)	146 (5.76)	85 (3.35)	60 (2.35)	76 (3.00)	6.3 (14)
1321-3R25-C	183 (7.20)	146 (5.76)	105 (4.10)	79 (3.10)	76 (3.00)	8.1 (18)
1321-3R35-A	193 (7.60)	146 (5.76)	91 (3.60)	66 (2.60)	76 (3.00)	6.3 (14)
1321-3R35-B	183 (7.20)	147 (5.80)	95 (3.75)	79 (3.10)	76 (3.00)	7.3 (16)
1321-3R35-C	229 (9.00)	187 (7.35)	118 (4.66)	80 (3.16)	76 (3.00)	13.6 (30)
1321-3R45-A	229 (9.00)	187 (7.35)	118 (4.66)	80 (3.16)	76 (3.00)	10.4 (23)
1321-3R45-B	229 (9.00)	184 (7.25)	118 (4.66)	80 (3.16)	76 (3.00)	12.7 (28)
1321-3R45-C	229 (9.00)	187 (7.35)	135 (5.30)	93 (3.66)	76 (3.00)	17.7 (39)
1321-3R55-A	229 (9.00)	187 (7.35)	118 (4.66)	80 (3.16)	76 (3.00)	10.9 (24)
1321-3R55-B	229 (9.00)	187 (7.35)	118 (4.66)	80 (3.16)	76 (3.00)	12.3 (27)
1321-3R55-C	229 (9.00)	184 (7.25)	142 (5.60)	99 (3.90)	76 (3.00)	18.6 (41)
1321-3R80-A	274 (10.80)	216 (8.50)	139 (5.47)	88 (3.47)	92 (3.63)	19.5 (43)
1321-3R80-B	274 (10.80)	216 (8.50)	139 (5.47)	88 (3.47)	92 (3.63)	23.1 (51)
1321-3R80-C	274 (10.80)	210 (8.26)	156 (6.16)	106 (4.16)	92 (3.63)	25.0 (55)
1321-3R100-A	274 (10.80)	217 (8.55)	139 (5.47)	84 (3.30)	92 (3.63)	21.3 (47)
1321-3R100-B	274 (10.80)	210 (8.25)	144 (5.66)	93 (3.66)	92 (3.63)	23.1 (51)
1321-3R100-C	274 (10.80)	210 (8.25)	156 (6.16)	106 (4.16)	92 (3.63)	33.6 (74)
1321-3R130-A	229 (9.00)	179 (7.04)	118 (4.66)	80 (3.16)	76 (3.00)	13.2 (29)
1321-3R130-B	274 (10.80)	213 (8.40)	144 (5.66)	93 (3.66)	92 (3.63)	25.9 (57)
1321-3R130-C	279 (11.00)	216 (8.50)	156 (6.16)	106 (4.16)	92 (3.63)	29.0 (64)
1321-3R160-A	274 (10.80)	216 (8.50)	172 (6.80)	80 (3.16)	92 (3.63)	19.0 (42)
1321-3R160-B	279 (11.00)	216 (8.50)	178 (700)	88 (3.47)	92 (3.63)	23.0 (51)
1321-3R160-C	287 (11.30)	216 (8.50)	229 (9.00)	118 (4.66)	92 (3.63)	33.0 (72)
1321-3R200-B	274 (10.80)	216 (8.50)	210 (8.30)	112 (4.41)	92 (3.63)	31.0 (67)
1321-3R200-C	274 (10.80)	216 (8.50)	254 (10.00)	150 (5.91)	92 (3.63)	46.0 (100)
1321-3R250-B	366 (14.40)	292 (11.50)	292 (11.50)	192 (7.56)	117 (4.60)	53.5 (118)
1321-3R250-C	366 (14.40)	286 (11.25)	260 (10.25)	167 (6.56)	117 (4.60)	57.0 (125)
1321-3R320-B	274 (10.80)	229 (9.00)	254 (10.00)	165 (6.50)	92 (3.63)	46.3 (102)
1321-3R320-C	366 (14.40)	286 (11.25)	267 (10.50)	192 (7.56)	117 (4.60)	72.6 (160)
1321-3R400-B	381 (15.00)	286 (11.25)	292 (11.50)	179 (7.06)	117 (4.60)	53.5 (118)
1321-3R400-C	366 (14.40)	286 (11.25)	318 (12.50)	192 (7.56)	117 (4.60)	67.6 (149)
1321-3R500-B	366 (14.40)	292 (11.50)	292 (11.50)	192 (7.56)	117 (4.60)	53.5 (118)
1321-3R500-C	366 (14.40)	286 (11.25)	254 (10.00)	141 (5.56)	117 (4.60)	54.4 (120)

Bus Inductors

Dimensions are in millimeters and (inches).
Weights are in kilograms and (pounds).

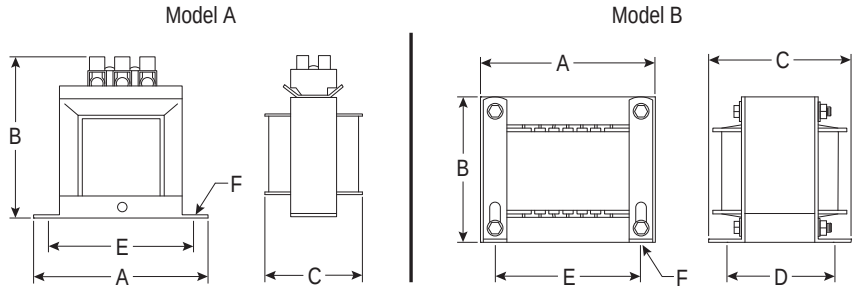

Catalog Number	Model	A	B	C	D	E	F	Weight
1321-DC9-2	A	95 (3.75)	83 (3.25)	51 (2.00)	–	80 (3.13)	4.7 (0.19)	–
1321-DC12-1	A	95 (3.75)	83 (3.25)	44 (1.75)	–	80 (3.13)	4.7 (0.19)	–
1321-DC12-2	B	97 (3.81)	114 (4.50)	72 (2.82)	51 (2.00)	80 (3.13)	5x8 (0.20x0.33)	5.9 (13.0)
1321-DC18-1	A	95 (3.75)	83 (3.25)	51 (2.00)	–	80 (3.13)	4.7 (0.19)	–
1321-DC18-4	B	118 (4.63)	133 (5.25)	102 (4.00)	64 (2.50)	95 (3.75)	5x8 (0.20x0.33)	3.6 (8.0)
1321-DC25-4	B	97 (3.81)	114 (4.50)	76 (3.00)	64 (2.50)	80 (3.13)	5x8 (0.20x0.33)	5.9 (13.0)
1321-DC32-1	B	97 (3.81)	114 (4.50)	84 (3.32)	64 (2.50)	80 (3.13)	5x8 (0.20x0.33)	2.3 (5.0)
1321-DC32-2	B	118 (4.63)	133 (5.25)	108 (4.25)	76 (3.00)	95 (3.75)	5x8 (0.20x0.33)	4.5 (10.0)
1321-DC40-2	B	97 (3.81)	114 (4.50)	95 (3.75)	76 (3.00)	80 (3.13)	5x8 (0.20x0.33)	3.2 (7.0)
1321-DC40-4	B	165 (6.50)	166 (6.55)	152 (6.00)	86 (3.38)	135 (5.31)	7x13 (0.28x0.52)	9.5 (21.0)

Configured Drives Programs

Catalog Numbers: 22-RFD323 and 22-RFD480

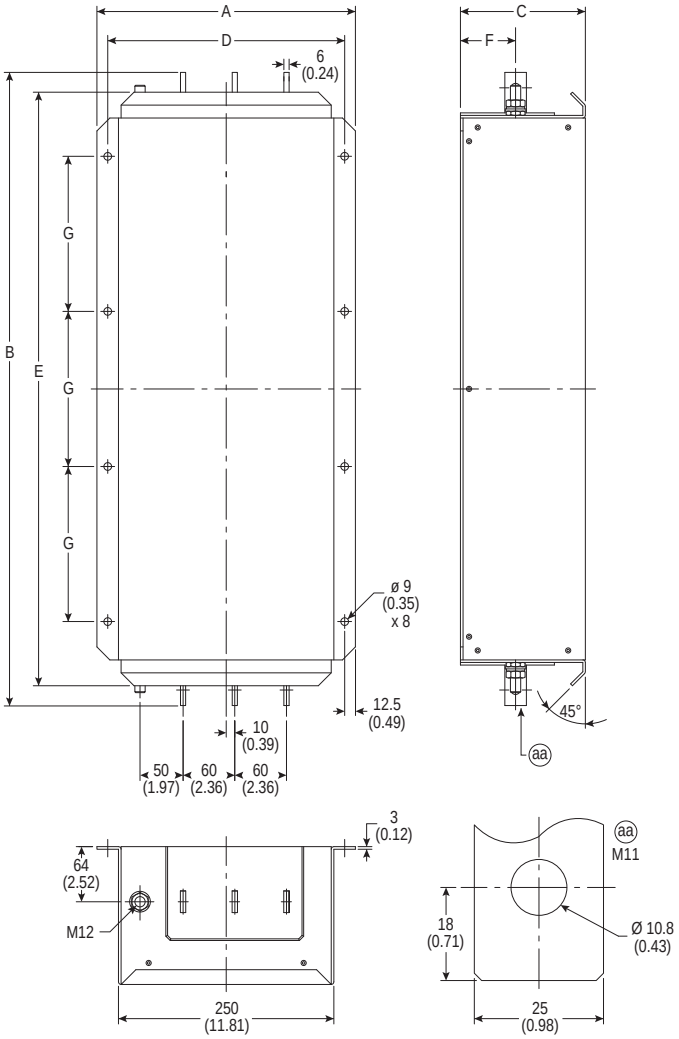

Catalog No.	A	B	C	D	E	F	G
22-RFD323	300 (11.81)	735 (28.94)	145 (5.71)	275 (10.83)	689 (27.13)	64 (2.52)	180 (7.09)
22-RFD480	300 (11.81)	882 (34.72)	145 (5.71)	275 (10.83)	836 (32.91)	64 (2.52)	240 (9.45)

Human Interface Module (HIM) Dimensions

NEMA/UL Type 1 Bezel

– Dimensions are in millimeters and (inches)

Catalog Number: 22-HIM-B1

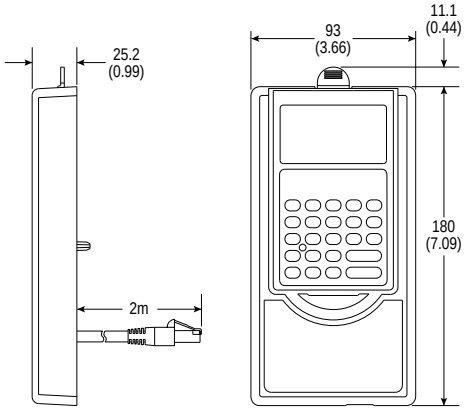

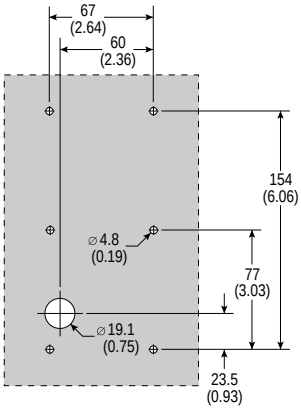

NEMA/UL Type 4X/12 Remote (Panel Mount) Small HIM

– Dimensions are in millimeters and (inches)

Catalog Number: 22-HIM-C2S

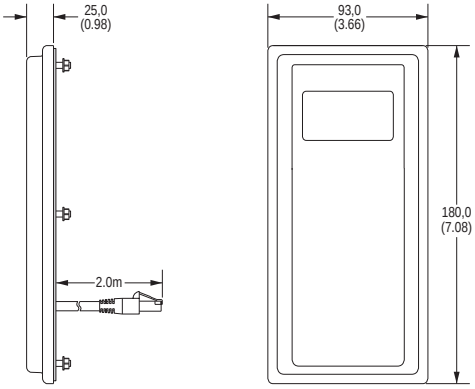

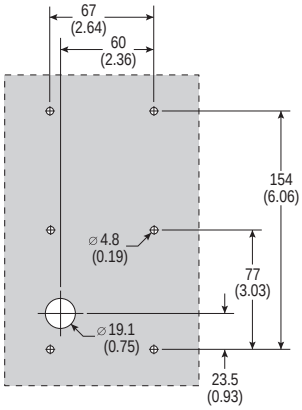

PowerFlex 400 Packaged Product Overview

Description

The Configured Drives program allows users to create Disconnect and Contactor Bypass packages based on their specific needs and requirements. A limited factory installed option set is offered to optimize package configurations while providing a versatile and cost-effective solution. Configurations feature wall mount construction and are available in different NEMA/UL ratings.

Main Input Disconnect/Circuit Breaker

- Door interlocked main input device
  - Disconnect switch with Class J fuses
  - Thermal magnetic molded case circuit breaker
- High AIC Rating for direct connection to high capacity power distribution lines
  - 100,000 AIC rating with fused disconnect
  - 65,000 AIC rating with circuit breaker

3 Contactor Full Feature Bypass with Disconnect/ Circuit Breaker

- Door interlocked main input device
  - Disconnect switch with Class J fuses
  - Thermal magnetic molded case circuit breaker
- 3 contactor manual bypass with Drive/Drive Test/Bypass modes
- Bypass control and status display with indicating LEDs
- Class 20 motor overload protection in bypass circuit
- Selector switch for Hand/Off/Auto
- Remote start capability when in bypass mode

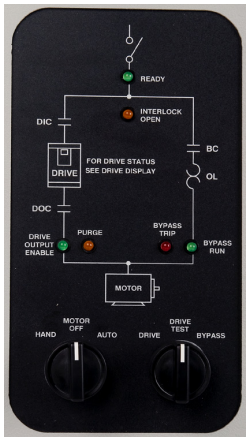

3 Contactor Basic Bypass with Disconnect

- Door interlocked main input disconnect
- 3 contactor manual bypass with Drive/Off/Drive Test/Bypass modes
- User-powered (24V AC) “Drive/Bypass” enable relay is provided for remote shut down

Catalog Number Explanation

Position

1-3	4	5	6-8	9	10	11	12	13	14	15	16	17	18	19+
23C	–	D	038	A	1	0	3	N	N	B	A	N	N	-LR
a		b	c	d	e	f	g	h	i	j	k	l	m	n

a

Drive	
Code	Type
23C	PowerFlex 400

b

Voltage Rating		
Code	Voltage	Ph.
X	208V AC	3
D	480V AC	3

c1

Rating			
208V, 60Hz Input			
Code	Amps[1]	kW (Hp)	Frame
012	12	2.2 (3.0)	C
017	16.8	3.7 (5.0)	C
024	24	5.5 (7.5)	C
033	30.8	7.5 (10)	C
049	46.2	11 (15)	D
065	64	15 (20)	D
075	75	18.5 (25)	D
090	88	22 (30)	D
120	114	30 (40)	E
145	143	37 (50)	E

[1] Configured drive amp ratings may differ from stand-alone drive ratings. Configured drives sized per NEC motor amps.

c2

Rating			
460V, 60Hz Input			
Code	Amps[1]	kW (Hp)	Frame
6P0	4.8	2.2 (3.0)	C
010	7.6	4.0 (5.0)	C
012	11	5.5 (7.5)	C
017	14	7.5 (10)	C
022	21	11 (15)	C
030	27	15 (20)	C
038	34	18.5 (25)	D
045	40	22 (30)	D
060	52	30 (40)	D
072	65	37 (50)	E
088	77	45 (60)	E
105	96	55 (75)	E
142	124	75 (100)	E
170	156	90 (125)	F
208	180	110 (150)	F
260	240	132 (200)	G
310	302	160 (250)	G
370	361	200 (300)	H
460	414	250 (350)	H

[1] Configured amp ratings may differ from stand-alone drive ratings. Configured drives sized per NEC motor amps.

d

Enclosure	
Code	Enclosure
A	NEMA/UL Type 1
H	NEMA/UL Type 12 with Fan and Filter
X	NEMA/UL Type 3R[1]
E	NEMA/UL Type 4[1]

[1] Designed for maximum ambient temperature of 40° C with no direct sunlight exposure.

e

HIM	
Code	Interface Module
1	Fixed Keypad

f

Emission Class	
Code	Rating
0	Not Filtered

g

Version	
Code	Version
3	RS485
B	BACnet Adapter
C	ControlNet Adapter
D	DeviceNet Adapter
E	EtherNet/IP Adapter
L	LonWorks Adapter
P	PROFIBUS DP Adapter

h

Code	Rating
N	Reserved

i

Code	Rating
N	Reserved

j

Package	
Code	Description
A	Main Input Disconnect
B	3 Contactor Full Feature Bypass with Disconnect
C	3 Contactor Basic Bypass with Disconnect[1]
M	Main Input Circuit Breaker[2]
N	3 Contactor Full Feature Bypass with Circuit Breaker

[1] Available only with NEMA/UL Type 1 enclosure (Position d = A).

[2] Available with all ratings in NEMA/UL Type 12, 3R, or 4 enclosures (Position d = H, X, or E) and 160-250 kW (250-350 Hp) ratings in NEMA/UL Type 1 enclosures (Position d = A).

k

Control	
Code	Description
A	Single Motor

l

Code	Rating
N	Reserved

m

Code	Rating
N	Reserved

n

Options	
Code	Description
-LR	3% Input Line Reactor[1]
-E5	Space Heater - Local Power[2]

[1] 3% Input Line Reactor not available for all package styles. Consult product selection tables for additional detail.

[2] Available with NEMA/UL Type 3R and 4 enclosures only.

PowerFlex 400 NEMA/UL Type 1 Enclosure (Position d = A)

208V AC, Main Input Disconnect

Drive Ratings			Frame Size	Fused Disconnect *(Position j = A)*
kW	**HP**	**Output Current Amps (40°C)**		**Catalog No.**
2.2	3.0	12	C	23C-X012A103NNAANN
3.7	5.0	16.8	C	23C-X017A103NNAANN
5.5	7.5	24	C	23C-X024A103NNAANN
7.5	10	30.8	C	23C-X033A103NNAANN
11	15	46.2	D	23C-X049A103NNAANN
15	20	64	D	23C-X065A103NNAANN
18.5	25	75	D	23C-X075A103NNAANN
22	30	88	D	23C-X090A103NNAANN
30	40	114	E	23C-X120A103NNAANN
37	50	143	E	23C-X145A103NNAANN

208V AC, 3 Contactor Full Feature Bypass with Disconnect

Drive Ratings			Frame Size	Fused Disconnect *(Position j = B)*
kW	**HP**	**Output Current Amps (40°C)**		**Catalog No.**
2.2	3.0	12	C	23C-X012A103NNBANN
3.7	5.0	16.8	C	23C-X017A103NNBANN
5.5	7.5	24	C	23C-X024A103NNBANN
7.5	10	30.8	C	23C-X033A103NNBANN
11	15	46.2	D	23C-X049A103NNBANN
15	20	64	D	23C-X065A103NNBANN
18.5	25	75	D	23C-X075A103NNBANN
22	30	88	D	23C-X090A103NNBANN
30	40	114	E	23C-X120A103NNBANN
37	50	143	E	23C-X145A103NNBANN

460V AC, Main Input Disconnect/Circuit Breaker

Drive Ratings			Frame Size	Fused Disconnect *(Position j = A)*	Circuit Breaker *(Position j = M)*
kW	**HP**	**Output Current Amps (40°C)**		**Catalog No.**	**Catalog No.**
2.2	3.0	4.8	C	23C-D6P0A103NNAANN	–
4.0	5.0	7.6	C	23C-D010A103NNAANN	–
5.5	7.5	11	C	23C-D012A103NNAANN	–
7.5	10	14	C	23C-D017A103NNAANN	–
11	15	21	C	23C-D022A103NNAANN	–
15	20	27	C	23C-D030A103NNAANN	–
18.5	25	34	D	23C-D038A103NNAANN	–
22	30	40	D	23C-D045A103NNAANN	–
30	40	52	D	23C-D060A103NNAANN	–
37	50	65	E	23C-D072A103NNAANN	–
45	60	77	E	23C-D088A103NNAANN	–
55	75	96	E	23C-D105A103NNAANN	–
75	100	124	E	23C-D142A103NNAANN	–
90	125	156	F	23C-D170A103NNAANN	–
110	150	180	F	23C-D208A103NNAANN	–
132	200	240	G	23C-D260A103NNAANN	–
160	250	302	G	–	23C-D310A103NNMANN
200	300	361	H	–	23C-D370A103NNMANN
250	350	414	H	–	23C-D460A103NNMANN

460V AC, 3 Contactor Full Feature Bypass with Disconnect/Circuit Breaker

Drive Ratings			Frame Size	Fused Disconnect *(Position j = B)*	Circuit Breaker *(Position j = N)*
kW	**HP**	**Output Current Amps (40°C)**		**Catalog No.**	**Catalog No.**
2.2	3.0	4.8	C	23C-D6P0A103NNBANN	–
4.0	5.0	7.6	C	23C-D010A103NNBANN	–
5.5	7.5	11	C	23C-D012A103NNBANN	–
7.5	10	14	C	23C-D017A103NNBANN	–
11	15	21	C	23C-D022A103NNBANN	–
15	20	27	C	23C-D030A103NNBANN	–
18.5	25	34	D	23C-D038A103NNBANN	–
22	30	40	D	23C-D045A103NNBANN	–
30	40	52	D	23C-D060A103NNBANN	–
37	50	65	E	23C-D072A103NNBANN	–
45	60	77	E	23C-D088A103NNBANN	–
55	75	96	E	23C-D105A103NNBANN	–
75	100	124	E	23C-D142A103NNBANN	–
90	125	156	F	23C-D170A103NNBANN	–
110	150	180	F	23C-D208A103NNBANN	–
132	200	240	G	23C-D260A103NNBANN	–
160	250	302	G	–	23C-D310A103NNNANN
200	300	361	H	–	23C-D370A103NNNANN
250	350	414	H	–	23C-D460A103NNNANN

460V AC, 3 Contactor Basic Bypass with Disconnect

Drive Ratings			Frame Size	Fused Disconnect *(Position j = C)*
kW	**HP**	**Output Current Amps (40°C)**		**Catalog No.**
2.2	3.0	4.8	C	23C-D6P0A103NNCANN
4.0	5.0	7.6	C	23C-D010A103NNCANN
5.5	7.5	11	C	23C-D012A103NNCANN
7.5	10	14	C	23C-D017A103NNCANN
11	15	21	C	23C-D022A103NNCANN
15	20	27	C	23C-D030A103NNCANN
18.5	25	34	D	23C-D038A103NNCANN
22	30	40	D	23C-D045A103NNCANN
30	40	52	D	23C-D060A103NNCANN
37	50	65	E	23C-D072A103NNCANN
45	60	77	E	23C-D088A103NNCANN
55	75	96	E	23C-D105A103NNCANN
75	100	124	E	23C-D142A103NNCANN

PowerFlex 400 NEMA/UL Type 12 Enclosure (Position d = H)

208V AC, Main Input Disconnect/Circuit Breaker

Drive Ratings			Frame Size	Fused Disconnect *(Position j = A)*	Circuit Breaker *(Position j = M)*
kW	**HP**	**Output Current Amps (40°C)**		**Catalog No.**	**Catalog No.**
2.2	3.0	12	C	23C-X012H103NNAANN	23C-X012H103NNMANN
3.7	5.0	16.8	C	23C-X017H103NNAANN	23C-X017H103NNMANN
5.5	7.5	24	C	23C-X024H103NNAANN	23C-X024H103NNMANN
7.5	10	30.8	C	23C-X033H103NNAANN	23C-X033H103NNMANN
11	15	46.2	D	23C-X049H103NNAANN	23C-X049H103NNMANN
15	20	64	D	23C-X065H103NNAANN	23C-X065H103NNMANN
18.5	25	75	D	23C-X075H103NNAANN	23C-X075H103NNMANN
22	30	88	D	23C-X090H103NNAANN	23C-X090H103NNMANN
30	40	114	E	23C-X120H103NNAANN	23C-X120H103NNMANN
37	50	143	E	23C-X145H103NNAANN	23C-X145H103NNMANN

208V AC, 3 Contactor Full Feature Bypass with Disconnect/Circuit Breaker

Drive Ratings			Frame Size	Fused Disconnect *(Position j = B)*	Circuit Breaker *(Position j = N)*
kW	**HP**	**Output Current Amps (40°C)**		**Catalog No.**	**Catalog No.**
2.2	3.0	12	C	23C-X012H103NNBANN	23C-X012H103NNNANN
3.7	5.0	16.8	C	23C-X017H103NNBANN	23C-X017H103NNNANN
5.5	7.5	24	C	23C-X024H103NNBANN	23C-X024H103NNNANN
7.5	10	30.8	C	23C-X033H103NNBANN	23C-X033H103NNNANN
11	15	46.2	D	23C-X049H103NNBANN	23C-X049H103NNNANN
15	20	64	D	23C-X065H103NNBANN	23C-X065H103NNNANN
18.5	25	75	D	23C-X075H103NNBANN	23C-X075H103NNNANN
22	30	88	D	23C-X090H103NNBANN	23C-X090H103NNNANN
30	40	114	E	23C-X120H103NNBANN	23C-X120H103NNNANN
37	50	143	E	23C-X145H103NNBANN	23C-X145H103NNNANN

460V AC, Main Input Disconnect/Circuit Breaker

Drive Ratings			Frame Size	Fused Disconnect *(Position j = A)*	Circuit Breaker *(Position j = M)*
kW	**HP**	**Output Current Amps (40°C)**		**Catalog No.**	**Catalog No.**
2.2	3.0	4.8	C	23C-D6P0H103NNAANN	23C-D6P0H103NNMANN
4.0	5.0	7.6	C	23C-D010H103NNAANN	23C-D010H103NNMANN
5.5	7.5	11	C	23C-D012H103NNAANN	23C-D012H103NNMANN
7.5	10	14	C	23C-D017H103NNAANN	23C-D017H103NNMANN
11	15	21	C	23C-D022H103NNAANN	23C-D022H103NNMANN
15	20	27	C	23C-D030H103NNAANN	23C-D030H103NNMANN
18.5	25	34	D	23C-D038H103NNAANN	23C-D038H103NNMANN
22	30	40	D	23C-D045H103NNAANN	23C-D045H103NNMANN
30	40	52	D	23C-D060H103NNAANN	23C-D060H103NNMANN
37	50	65	E	23C-D072H103NNAANN	23C-D072H103NNMANN
45	60	77	E	23C-D088H103NNAANN	23C-D088H103NNMANN
55	75	96	E	23C-D105H103NNAANN	23C-D105H103NNMANN
75	100	124	E	23C-D142H103NNAANN	23C-D142H103NNMANN
90	125	156	F	23C-D170H103NNAANN	23C-D170H103NNMANN
110	150	180	F	23C-D208H103NNAANN	23C-D208H103NNMANN

460V AC, 3 Contactor Full Feature Bypass with Disconnect/Circuit Breaker

Drive Ratings			Frame Size	Fused Disconnect *(Position j = B)*	Circuit Breaker *(Position j = N)*
kW	**HP**	**Output Current Amps (40°C)**		**Catalog No.**	**Catalog No.**
2.2	3.0	4.8	C	23C-D6P0H103NNBANN	23C-D6P0H103NNNANN
4.0	5.0	7.6	C	23C-D010H103NNBANN	23C-D010H103NNNANN
5.5	7.5	11	C	23C-D012H103NNBANN	23C-D012H103NNNANN
7.5	10	14	C	23C-D017H103NNBANN	23C-D017H103NNNANN
11	15	21	C	23C-D022H103NNBANN	23C-D022H103NNNANN
15	20	27	C	23C-D030H103NNBANN	23C-D030H103NNNANN
18.5	25	34	D	23C-D038H103NNBANN	23C-D038H103NNNANN
22	30	40	D	23C-D045H103NNBANN	23C-D045H103NNNANN
30	40	52	D	23C-D060H103NNBANN	23C-D060H103NNNANN
37	50	65	E	23C-D072H103NNBANN	23C-D072H103NNNANN
45	60	77	E	23C-D088H103NNBANN	23C-D088H103NNNANN
55	75	96	E	23C-D105H103NNBANN	23C-D105H103NNNANN
75	100	124	E	23C-D142H103NNBANN	23C-D142H103NNNANN
90	125	156	F	23C-D170H103NNBANN	23C-D170H103NNNANN
110	150	180	F	23C-D208H103NNBANN	23C-D208H103NNNANN

PowerFlex 400 NEMA/UL Type 3R Enclosure (Position d = X)

208V AC, Main Input Disconnect/Circuit Breaker

Drive Ratings			Frame Size	Fused Disconnect *(Position j = A)*	Circuit Breaker *(Position j = M)*
kW	**HP**	**Output Current Amps (40°C)**		**Catalog No.**	**Catalog No.**
2.2	3.0	12	C	23C-X012X103NNAANN	23C-X012X103NNMANN
3.7	5.0	16.8	C	23C-X017X103NNAANN	23C-X017X103NNMANN
5.5	7.5	24	C	23C-X024X103NNAANN	23C-X024X103NNMANN
7.5	10	30.8	C	23C-X033X103NNAANN	23C-X033X103NNMANN
11	15	46.2	D	23C-X049X103NNAANN	23C-X049X103NNMANN
15	20	64	D	23C-X065X103NNAANN	23C-X065X103NNMANN
18.5	25	75	D	23C-X075X103NNAANN	23C-X075X103NNMANN
22	30	88	D	23C-X090X103NNAANN	23C-X090X103NNMANN
30	40	114	E	23C-X120X103NNAANN	23C-X120X103NNMANN
37	50	143	E	23C-X145X103NNAANN	23C-X145X103NNMANN

208V AC, 3 Contactor Full Feature Bypass with Disconnect/Circuit Breaker

Drive Ratings			Frame Size	Fused Disconnect *(Position j = B)*	Circuit Breaker *(Position j = N)*
kW	**HP**	**Output Current Amps (40°C)**		**Catalog No.**	**Catalog No.**
2.2	3.0	12	C	23C-X012X103NNBANN	23C-X012X103NNNANN
3.7	5.0	16.8	C	23C-X017X103NNBANN	23C-X017X103NNNANN
5.5	7.5	24	C	23C-X024X103NNBANN	23C-X024X103NNNANN
7.5	10	30.8	C	23C-X033X103NNBANN	23C-X033X103NNNANN
11	15	46.2	D	23C-X049X103NNBANN	23C-X049X103NNNANN
15	20	64	D	23C-X065X103NNBANN	23C-X065X103NNNANN
18.5	25	75	D	23C-X075X103NNBANN	23C-X075X103NNNANN
22	30	88	D	23C-X090X103NNBANN	23C-X090X103NNNANN
30	40	114	E	23C-X120X103NNBANN	23C-X120X103NNNANN
37	50	143	E	23C-X145X103NNBANN	23C-X145X103NNNANN

460V AC, Main Input Disconnect/Circuit Breaker

Drive Ratings			Frame Size	Fused Disconnect *(Position j = A)*	Circuit Breaker *(Position j = M)*
kW	**HP**	**Output Current Amps (40°C)**		**Catalog No.**	**Catalog No.**
2.2	3.0	4.8	C	23C-D6P0X103NNAANN	23C-D6P0X103NNMANN
4.0	5.0	7.6	C	23C-D010X103NNAANN	23C-D010X103NNMANN
5.5	7.5	11	C	23C-D012X103NNAANN	23C-D012X103NNMANN
7.5	10	14	C	23C-D017X103NNAANN	23C-D017X103NNMANN
11	15	21	C	23C-D022X103NNAANN	23C-D022X103NNMANN
15	20	27	C	23C-D030X103NNAANN	23C-D030X103NNMANN
18.5	25	34	D	23C-D038X103NNAANN	23C-D038X103NNMANN
22	30	40	D	23C-D045X103NNAANN	23C-D045X103NNMANN
30	40	52	D	23C-D060X103NNAANN	23C-D060X103NNMANN
37	50	65	E	23C-D072X103NNAANN	23C-D072X103NNMANN
45	60	77	E	23C-D088X103NNAANN	23C-D088X103NNMANN
55	75	96	E	23C-D105X103NNAANN	23C-D105X103NNMANN
75	100	124	E	23C-D142X103NNAANN	23C-D142X103NNMANN
90	125	156	F	23C-D170X103NNAANN	23C-D170X103NNMANN
110	150	180	F	23C-D208X103NNAANN	23C-D208X103NNMANN

460V AC, 3 Contactor Full Feature Bypass with Disconnect/Circuit Breaker

Drive Ratings			Frame Size	Fused Disconnect *(Position j = B)*	Circuit Breaker *(Position j = N)*
kW	**HP**	**Output Current Amps** *(40°C)*		**Catalog No.**	**Catalog No.**
2.2	3.0	4.8	C	23C-D6P0X103NNBANN	23C-D6P0X103NNNANN
4.0	5.0	7.6	C	23C-D010X103NNBANN	23C-D010X103NNNANN
5.5	7.5	11	C	23C-D012X103NNBANN	23C-D012X103NNNANN
7.5	10	14	C	23C-D017X103NNBANN	23C-D017X103NNNANN
11	15	21	C	23C-D022X103NNBANN	23C-D022X103NNNANN
15	20	27	C	23C-D030X103NNBANN	23C-D030X103NNNANN
18.5	25	34	D	23C-D038X103NNBANN	23C-D038X103NNNANN
22	30	40	D	23C-D045X103NNBANN	23C-D045X103NNNANN
30	40	52	D	23C-D060X103NNBANN	23C-D060X103NNNANN
37	50	65	E	23C-D072X103NNBANN	23C-D072X103NNNANN
45	60	77	E	23C-D088X103NNBANN	23C-D088X103NNNANN
55	75	96	E	23C-D105X103NNBANN	23C-D105X103NNNANN
75	100	124	E	23C-D142X103NNBANN	23C-D142X103NNNANN
90	125	156	F	23C-D170X103NNBANN	23C-D170X103NNNANN
110	150	180	F	23C-D208X103NNBANN	23C-D208X103NNNANN

PowerFlex 400 NEMA/UL Type 4 Enclosure (Position d = E)

208V AC, Main Input Disconnect/Circuit Breaker

Drive Ratings			Frame Size	Fused Disconnect *(Position j = A)*	Circuit Breaker *(Position j = M)*
kW	**HP**	**Output Current Amps (40°C)**		**Catalog No.**	**Catalog No.**
2.2	3.0	12	C	23C-X012E103NNAANN	23C-X012E103NNMANN
3.7	5.0	16.8	C	23C-X017E103NNAANN	23C-X017E103NNMANN
5.5	7.5	24	C	23C-X024E103NNAANN	23C-X024E103NNMANN
7.5	10	30.8	C	23C-X033E103NNAANN	23C-X033E103NNMANN
11	15	46.2	D	23C-X049E103NNAANN	23C-X049E103NNMANN
15	20	64	D	23C-X065E103NNAANN	23C-X065E103NNMANN
18.5	25	75	D	23C-X075E103NNAANN	23C-X075E103NNMANN
22	30	88	D	23C-X090E103NNAANN	23C-X090E103NNMANN
30	40	114	E	23C-X120E103NNAANN	23C-X120E103NNMANN
37	50	143	E	23C-X145E103NNAANN	23C-X145E103NNMANN

208V AC, 3 Contactor Full Feature Bypass with Disconnect/Circuit Breaker

Drive Ratings			Frame Size	Fused Disconnect *(Position j = B)*	Circuit Breaker *(Position j = N)*
kW	**HP**	**Output Current Amps (40°C)**		**Catalog No.**	**Catalog No.**
2.2	3.0	12	C	23C-X012E103NNBANN	23C-X012E103NNNANN
3.7	5.0	16.8	C	23C-X017E103NNBANN	23C-X017E103NNNANN
5.5	7.5	24	C	23C-X024E103NNBANN	23C-X024E103NNNANN
7.5	10	30.8	C	23C-X033E103NNBANN	23C-X033E103NNNANN
11	15	46.2	D	23C-X049E103NNBANN	23C-X049E103NNNANN
15	20	64	D	23C-X065E103NNBANN	23C-X065E103NNNANN
18.5	25	75	D	23C-X075E103NNBANN	23C-X075E103NNNANN
22	30	88	D	23C-X090E103NNBANN	23C-X090E103NNNANN
30	40	114	E	23C-X120E103NNBANN	23C-X120E103NNNANN
37	50	143	E	23C-X145E103NNBANN	23C-X145E103NNNANN

460V AC, Main Input Disconnect/Circuit Breaker

Drive Ratings			Frame Size	Fused Disconnect *(Position j = A)*	Circuit Breaker *(Position j = M)*
kW	**HP**	**Output Current Amps** *(40°C)*		**Catalog No.**	**Catalog No.**
2.2	3.0	4.8	C	23C-D6P0E103NNAANN	23C-D6P0E103NNMANN
4.0	5.0	7.6	C	23C-D010E103NNAANN	23C-D010E103NNMANN
5.5	7.5	11	C	23C-D012E103NNAANN	23C-D012E103NNMANN
7.5	10	14	C	23C-D017E103NNAANN	23C-D017E103NNMANN
11	15	21	C	23C-D022E103NNAANN	23C-D022E103NNMANN
15	20	27	C	23C-D030E103NNAANN	23C-D030E103NNMANN
18.5	25	34	D	23C-D038E103NNAANN	23C-D038E103NNMANN
22	30	40	D	23C-D045E103NNAANN	23C-D045E103NNMANN
30	40	52	D	23C-D060E103NNAANN	23C-D060E103NNMANN
37	50	65	E	23C-D072E103NNAANN	23C-D072E103NNMANN
45	60	77	E	23C-D088E103NNAANN	23C-D088E103NNMANN
55	75	96	E	23C-D105E103NNAANN	23C-D105E103NNMANN
75	100	124	E	23C-D142E103NNAANN	23C-D142E103NNMANN
90	125	156	F	23C-D170E103NNAANN	23C-D170E103NNMANN
110	150	180	F	23C-D208E103NNAANN	23C-D208E103NNMANN

460V AC, 3 Contactor Full Feature Bypass with Disconnect/Circuit Breaker

Drive Ratings			Frame Size	Fused Disconnect *(Position j = B)*	Circuit Breaker *(Position j = N)*
kW	**HP**	**Output Current Amps** *(40°C)*		**Catalog No.**	**Catalog No.**
2.2	3.0	4.8	C	23C-D6P0E103NNBANN	23C-D6P0E103NNNANN
4.0	5.0	7.6	C	23C-D010E103NNBANN	23C-D010E103NNNANN
5.5	7.5	11	C	23C-D012E103NNBANN	23C-D012E103NNNANN
7.5	10	14	C	23C-D017E103NNBANN	23C-D017E103NNNANN
11	15	21	C	23C-D022E103NNBANN	23C-D022E103NNNANN
15	20	27	C	23C-D030E103NNBANN	23C-D030E103NNNANN
18.5	25	34	D	23C-D038E103NNBANN	23C-D038E103NNNANN
22	30	40	D	23C-D045E103NNBANN	23C-D045E103NNNANN
30	40	52	D	23C-D060E103NNBANN	23C-D060E103NNNANN
37	50	65	E	23C-D072E103NNBANN	23C-D072E103NNNANN
45	60	77	E	23C-D088E103NNBANN	23C-D088E103NNNANN
55	75	96	E	23C-D105E103NNBANN	23C-D105E103NNNANN
75	100	124	E	23C-D142E103NNBANN	23C-D142E103NNNANN
90	125	156	F	23C-D170E103NNBANN	23C-D170E103NNNANN
110	150	180	F	23C-D208E103NNBANN	23C-D208E103NNNANN

Factory Installed Options

Internal Communication Adapters

Description	**Catalog Code** (Position 12)
RS485	3
BACnet	B
ControlNet	C
DeviceNet	D
EtherNet/IP	E
LonWorks	L
PROFIBUS DP	P

Options

Description	**Catalog Code** (Position 12)
3% Input Line Reactor	-LR(1)
Enclosure Space Heater	-E5(2)

(1) 3% input line reactor not available for all package styles
(2) Available with NEMA/UL Type 3R and four enclosures only.

Notes:

Additional Resources

These documents contain additional information concerning related products from Rockwell Automation.

Resource	Description
EtherNet/IP Network Devices User Manual, ENET-UM006	Describes how to configure and use EtherNet/IP devices to communicate on the EtherNet/IP network.
Ethernet Reference Manual, ENET-RM002	Describes basic Ethernet concepts, infrastructure components, and infrastructure features.
System Security Design Guidelines Reference Manual, SECURE-RM001	Provides guidance on how to conduct security assessments, implement Rockwell Automation products in a secure system, harden the control system, manage user access, and dispose of equipment.
Industrial Components Preventive Maintenance, Enclosures, and Contact Ratings Specifications, publication IC-TD002	Provides a quick reference tool for Allen-Bradley industrial automation controls and assemblies.
Safety Guidelines for the Application, Installation, and Maintenance of Solid-state Control, publication SGI-1.1	Designed to harmonize with NEMA Standards Publication No. ICS 1.1-1987 and provides general guidelines for the application, installation, and maintenance of solid-state control in the form of individual devices or packaged assemblies incorporating solid-state components.
Industrial Automation Wiring and Grounding Guidelines, publication 1770-4.1	Provides general guidelines for installing a Rockwell Automation industrial system.
Product Certifications website, rok.auto/certifications.	Provides declarations of conformity, certificates, and other certification details.

You can view or download publications at rok.auto/literature.

Rockwell Automation Support

Use these resources to access support information.

Technical Support Center	Find help with how-to videos, FAQs, chat, user forums, and product notification updates.	rok.auto/support
Knowledgebase	Access Knowledgebase articles.	rok.auto/knowledgebase
Local Technical Support Phone Numbers	Locate the telephone number for your country.	rok.auto/phonesupport
Literature Library	Find installation instructions, manuals, brochures, and technical data publications.	rok.auto/literature
Product Compatibility and Download Center (PCDC)	Download firmware, associated files (such as AOP, EDS, and DTM), and access product release notes.	rok.auto/pcdc

Documentation Feedback

Your comments help us serve your documentation needs better. If you have any suggestions on how to improve our content, complete the form at rok.auto/docfeedback.

Waste Electrical and Electronic Equipment (WEEE)

At the end of life, this equipment should be collected separately from any unsorted municipal waste.

Rockwell Automation maintains current product environmental compliance information on its website at rok.auto/pec.

Allen-Bradley, Connected Components Workbench, expanding human possibility, FactoryTalk, PowerFlex, Rockwell Automation, and TechConnect are trademarks of Rockwell Automation, Inc.
ControlNet, DeviceNet, and EtherNet/IP are trademark of ODVA, Inc.
Windows is a trademark of Microsoft Corporation.
Trademarks not belonging to Rockwell Automation are property of their respective companies.

Rockwell Otomasyon Ticaret A.Ş. Kar Plaza İş Merkezi E Blok Kat:6 34752, İçerenköy, İstanbul, Tel: +90 (216) 5698400 EEE Yönetmeliğine Uygundur

Connect with us.

rockwellautomation.com — expanding **human possibility**™

AMERICAS: Rockwell Automation, 1201 South Second Street, Milwaukee, WI 53204-2496 USA, Tel: (1) 414.382.2000, Fax: (1) 414.382.4444
EUROPE/MIDDLE EAST/AFRICA: Rockwell Automation NV, Pegasus Park, De Kleetlaan 12a, 1831 Diegem, Belgium, Tel: (32) 2 663 0600, Fax: (32) 2 663 0640
ASIA PACIFIC: Rockwell Automation, Level 14, Core F, Cyberport 3, 100 Cyberport Road, Hong Kong, Tel: (852) 2887 4788, Fax: (852) 2508 1846

Publication 22C-TD001F-EN-P - April 2021
Supersedes Publication 22C-TD001E-EN-P - January 2014

Copyright © 2021 Rockwell Automation, Inc. All rights reserved.